US009536579B2

(12) **United States Patent**
Iijima et al.

(10) **Patent No.: US 9,536,579 B2**
(45) **Date of Patent: Jan. 3, 2017**

(54) **SEMICONDUCTOR INTEGRATED CIRCUIT CAPABLE OF PRECISELY ADJUSTING DELAY AMOUNT OF STROBE SIGNAL**

(75) Inventors: **Masaaki Iijima**, Kawasaki (JP); **Mitsuhiro Deguchi**, Kawasaki (JP)

(73) Assignee: **RENESAS ELECTRONICS CORPORATION**, Tokyo (JP)

(*) Notice: Subject to any disclaimer, the term of this patent is extended or adjusted under 35 U.S.C. 154(b) by 6 days.

(21) Appl. No.: **14/369,501**

(22) PCT Filed: **Dec. 29, 2011**

(86) PCT No.: **PCT/JP2011/080532**

§ 371 (c)(1),
(2), (4) Date: **Jun. 27, 2014**

(87) PCT Pub. No.: **WO2013/099035**

PCT Pub. Date: **Jul. 4, 2013**

(65) **Prior Publication Data**

US 2015/0029800 A1 Jan. 29, 2015

(51) **Int. Cl.**

G11C 7/22	(2006.01)
H03K 19/00	(2006.01)
H03K 19/096	(2006.01)

(52) **U.S. Cl.**

CPC ***G11C 7/222*** (2013.01); ***H03K 19/0016*** (2013.01); ***H03K 19/096*** (2013.01)

(58) **Field of Classification Search**

CPC G11C 7/222; H03K 19/0016; H03K 19/096
See application file for complete search history.

(56) **References Cited**

U.S. PATENT DOCUMENTS

6,205,086 B1 3/2001 Hanzawa et al.
6,222,792 B1 4/2001 Hanzawa et al.
(Continued)

FOREIGN PATENT DOCUMENTS

JP 2000-311028 A 11/2000
JP 2000-323969 A 11/2000
(Continued)

OTHER PUBLICATIONS

English translation of International Search Report PCT/JP2011/080532 dated Jan. 31, 2012.
(Continued)

Primary Examiner — J. H. Hur
(74) *Attorney, Agent, or Firm* — McDermott Will & Emery LLP

(57) **ABSTRACT**

An interface circuit provided in a semiconductor device supplies an operation clock to an external memory device based on a clock signal and receives a data signal and a strobe signal from the external memory device. The interface circuit includes a delay circuit delaying the received strobe signal. The delay circuit includes a first adjustment circuit and a second adjustment circuit connected in series with the first adjustment circuit. The first adjustment circuit is capable of adjusting a delay amount of the strobe signal in a plurality of steps in accordance with the set frequency of the clock signal. The second adjustment circuit is capable of adjusting the delay amount of the strobe signal with a higher precision than the first adjustment circuit.

6 Claims, 17 Drawing Sheets

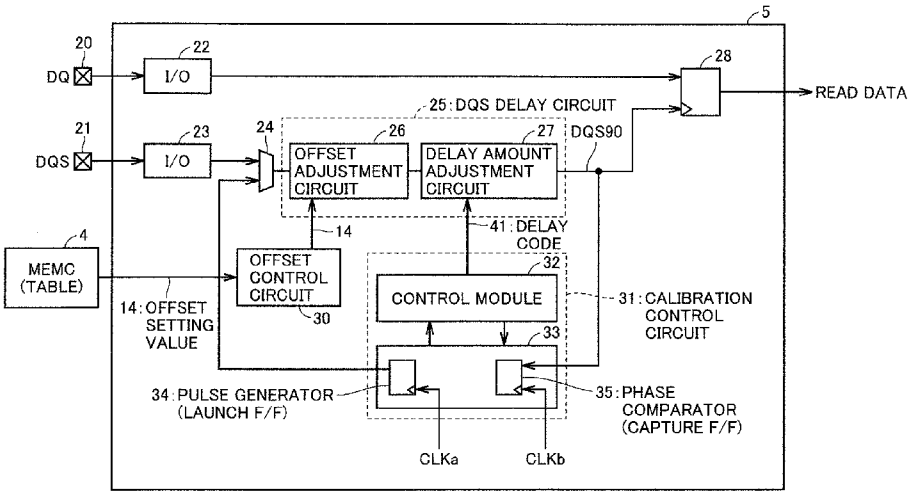

(56) **References Cited**

U.S. PATENT DOCUMENTS

2002/0149967	A1*	10/2002	Borkenhagen	G11C 7/1078 365/189.05
2003/0070052	A1*	4/2003	Lai	G06F 13/4243 711/167
2005/0047192	A1	3/2005	Matsui et al.	
2008/0276112	A1	11/2008	Matsui et al.	
2009/0039930	A1	2/2009	Kuroki et al.	
2012/0194248	A1*	8/2012	Magee	G11C 7/04 327/262

FOREIGN PATENT DOCUMENTS

JP	2005-078547	A	3/2005
JP	2006-099244	A	4/2006
JP	2007-226308	A	9/2007
JP	2008-311999	A	12/2008
JP	2009-021706	A	1/2009
JP	2009-212735	A	9/2009
JP	2011-188042	A	9/2011

OTHER PUBLICATIONS

Taiwanese Office Action dated Jan. 29, 2016 issued in Taiwanese Patent Application No. 101147529 (English translation).

Japanese Office Action dated Sep. 29, 2015, issued in corresponding Japanese Patent Application No. 2013-551167. (w/ English translation).

Japanese Office Action dated Sep. 29, 2015 issued in Japanese Patent Application No. 2013-551167 (English translation).

Chinese Office Action dated May 3, 2016 issued in Chinese Patent Application No. 201180076035.8 (English translation).

Taiwanese Office Action dated Sep. 9, 2016 issued in Taiwanese Patent Application No. 101147529 (English translation).

* cited by examiner

FIG.1

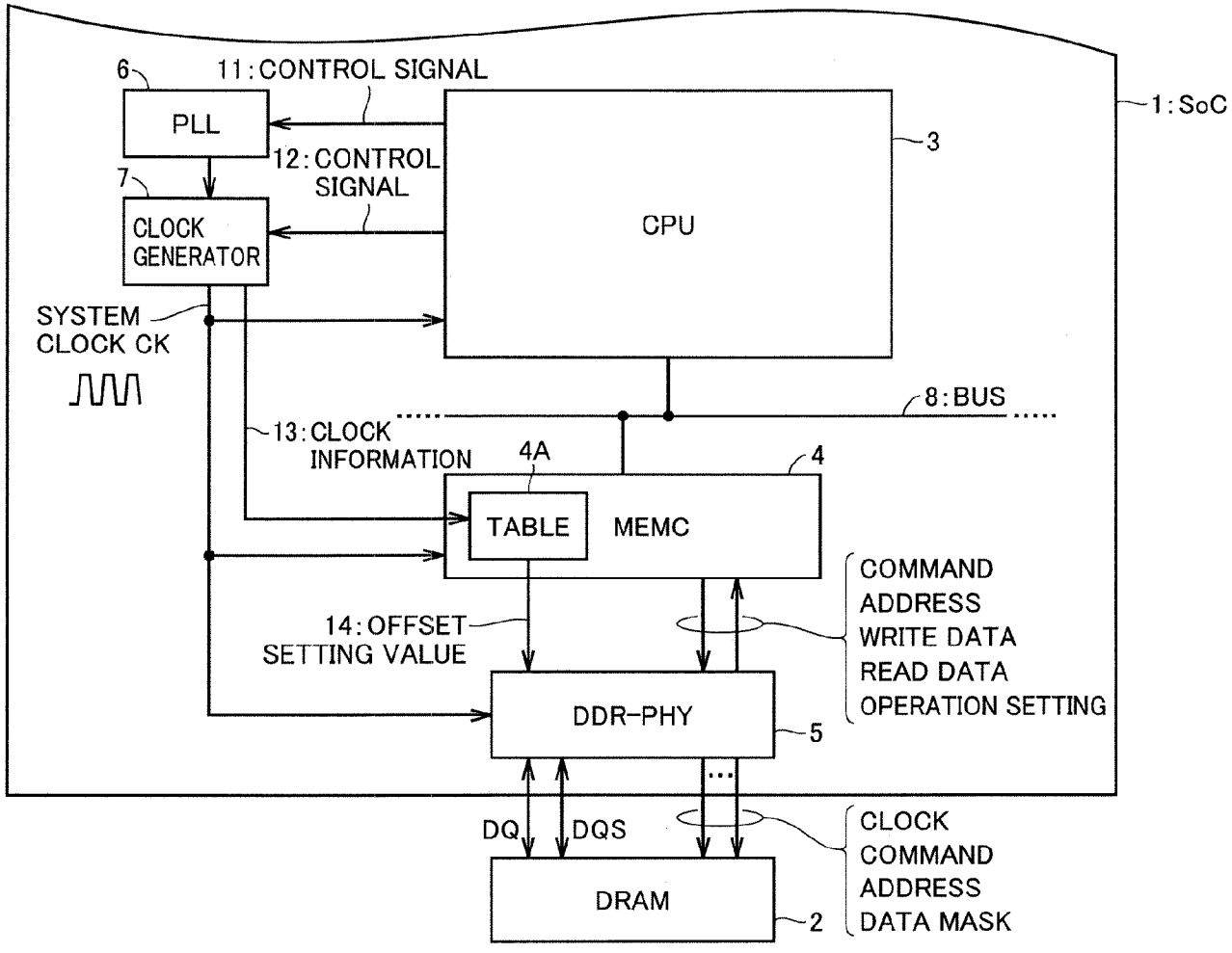
1:SoC
6
PLL
11:CONTROL SIGNAL
12:CONTROL SIGNAL
7
CLOCK GENERATOR
CPU
3
SYSTEM CLOCK CK
8:BUS
13:CLOCK INFORMATION
4A
4
TABLE
MEMC
14:OFFSET SETTING VALUE
COMMAND
ADDRESS
WRITE DATA
READ DATA
OPERATION SETTING
DDR-PHY
5
DQ
DQS
CLOCK
COMMAND
ADDRESS
DATA MASK
DRAM
2

FIG.2

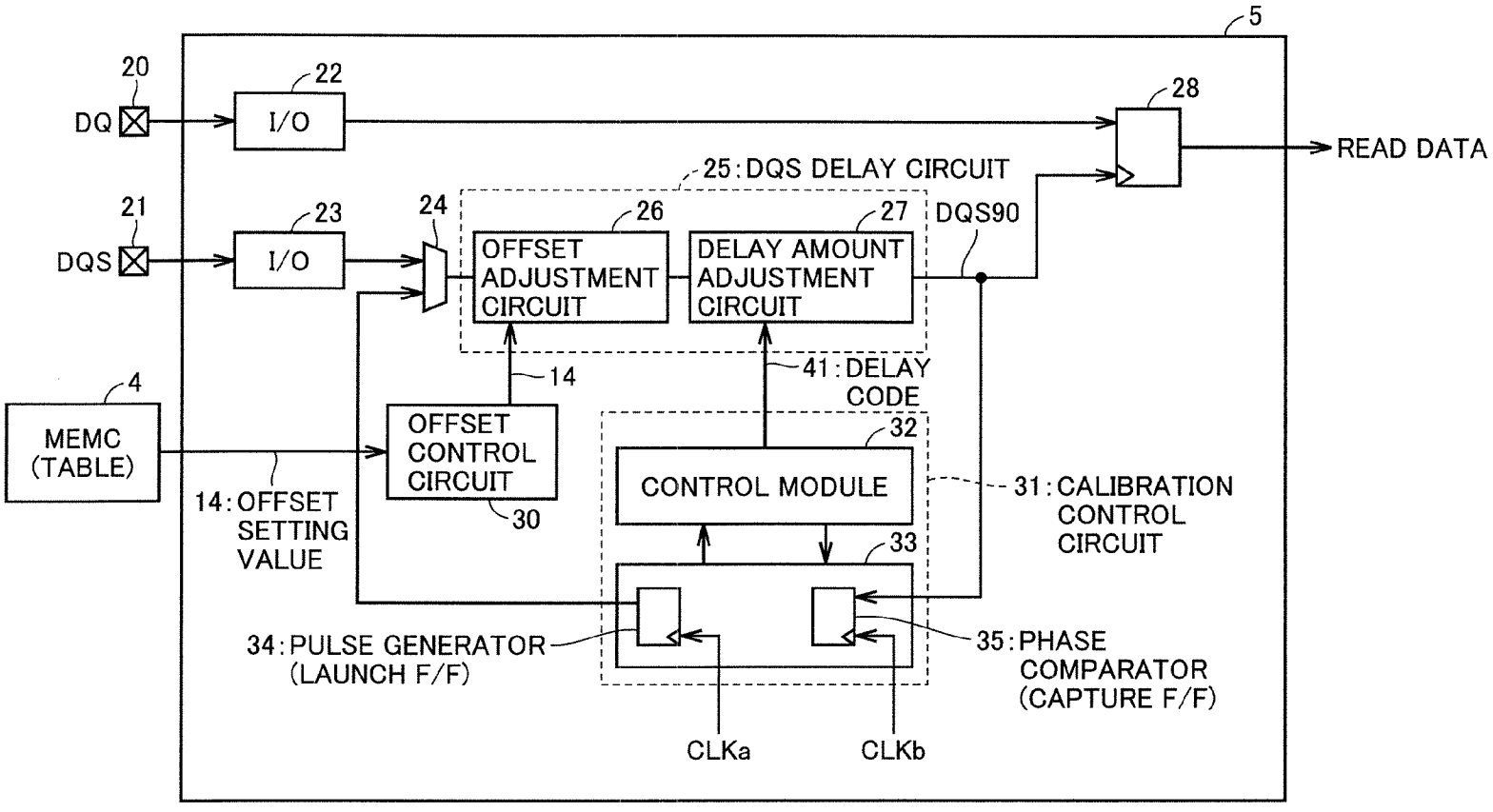
5
20
DQ
22
I/O
28
READ DATA
25:DQS DELAY CIRCUIT
21
DQS
23
I/O
24
26
OFFSET ADJUSTMENT CIRCUIT
27
DELAY AMOUNT ADJUSTMENT CIRCUIT
DQS90
14
41:DELAY CODE
4
MEMC (TABLE)
OFFSET CONTROL CIRCUIT
30
32
CONTROL MODULE
31:CALIBRATION CONTROL CIRCUIT
14:OFFSET SETTING VALUE
33
34:PULSE GENERATOR (LAUNCH F/F)
35:PHASE COMPARATOR (CAPTURE F/F)
CLKa
CLKb

FIG.3

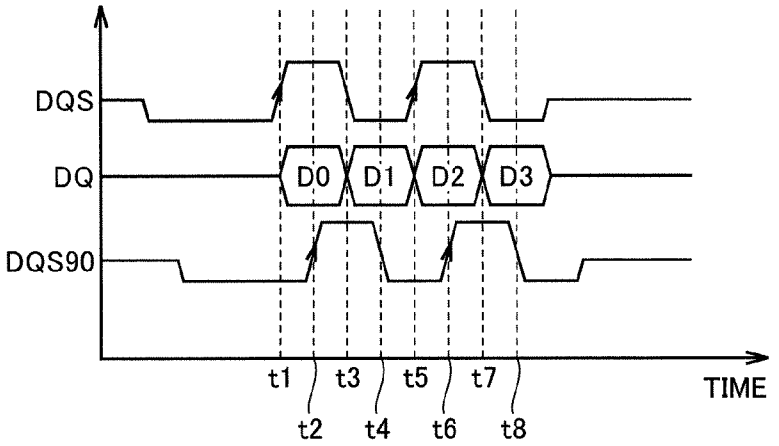
DQS
DQ
DQS90
D0
D1
D2
D3
t1
t2
t3
t4
t5
t6
t7
t8
TIME

FIG.4

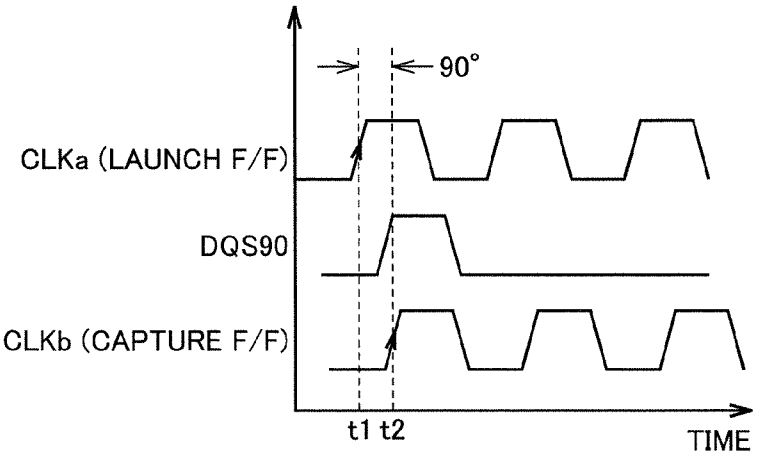
90°
CLKa (LAUNCH F/F)
DQS90
CLKb (CAPTURE F/F)
t1 t2
TIME

FIG.5

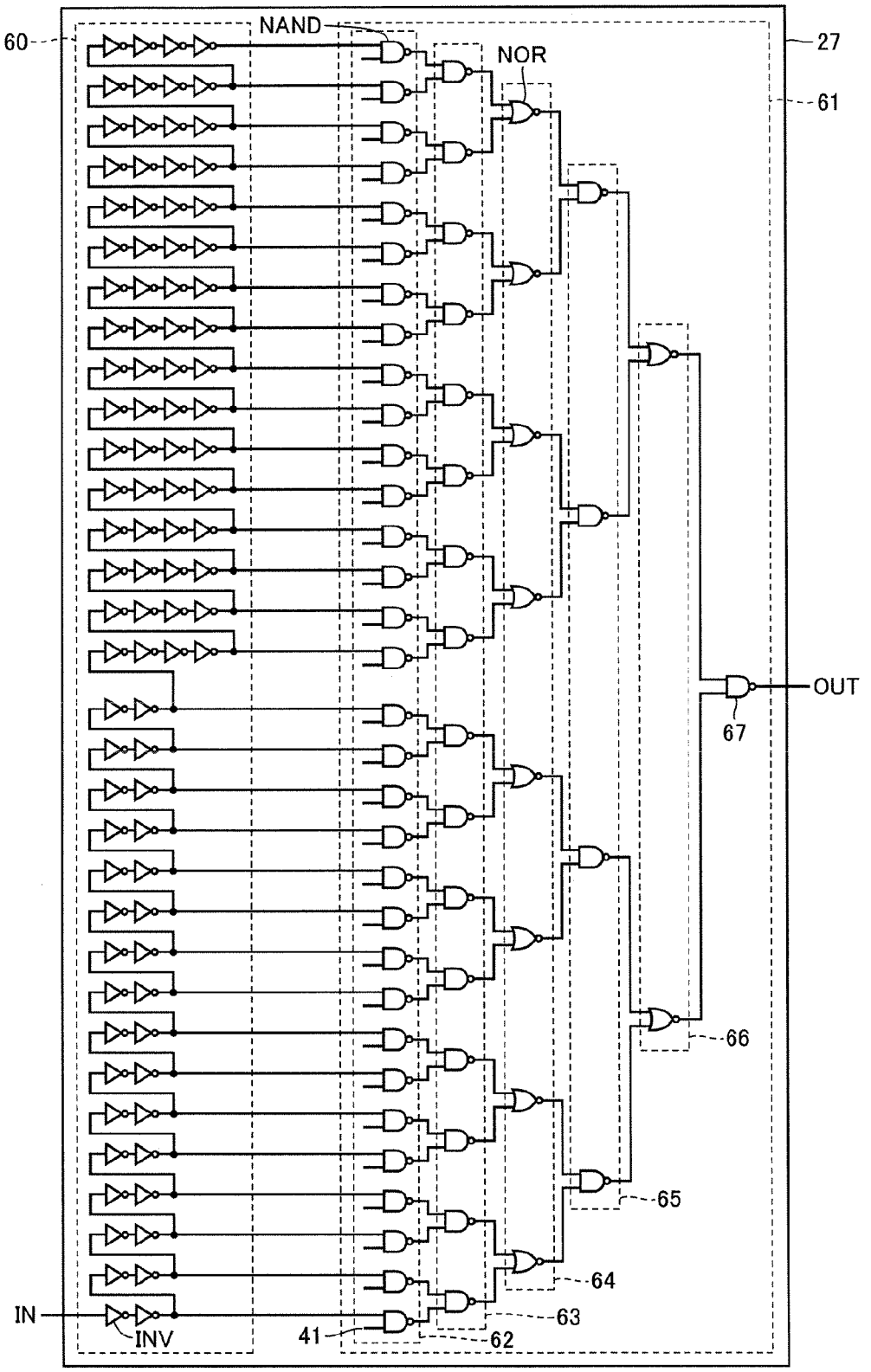

FIG.6

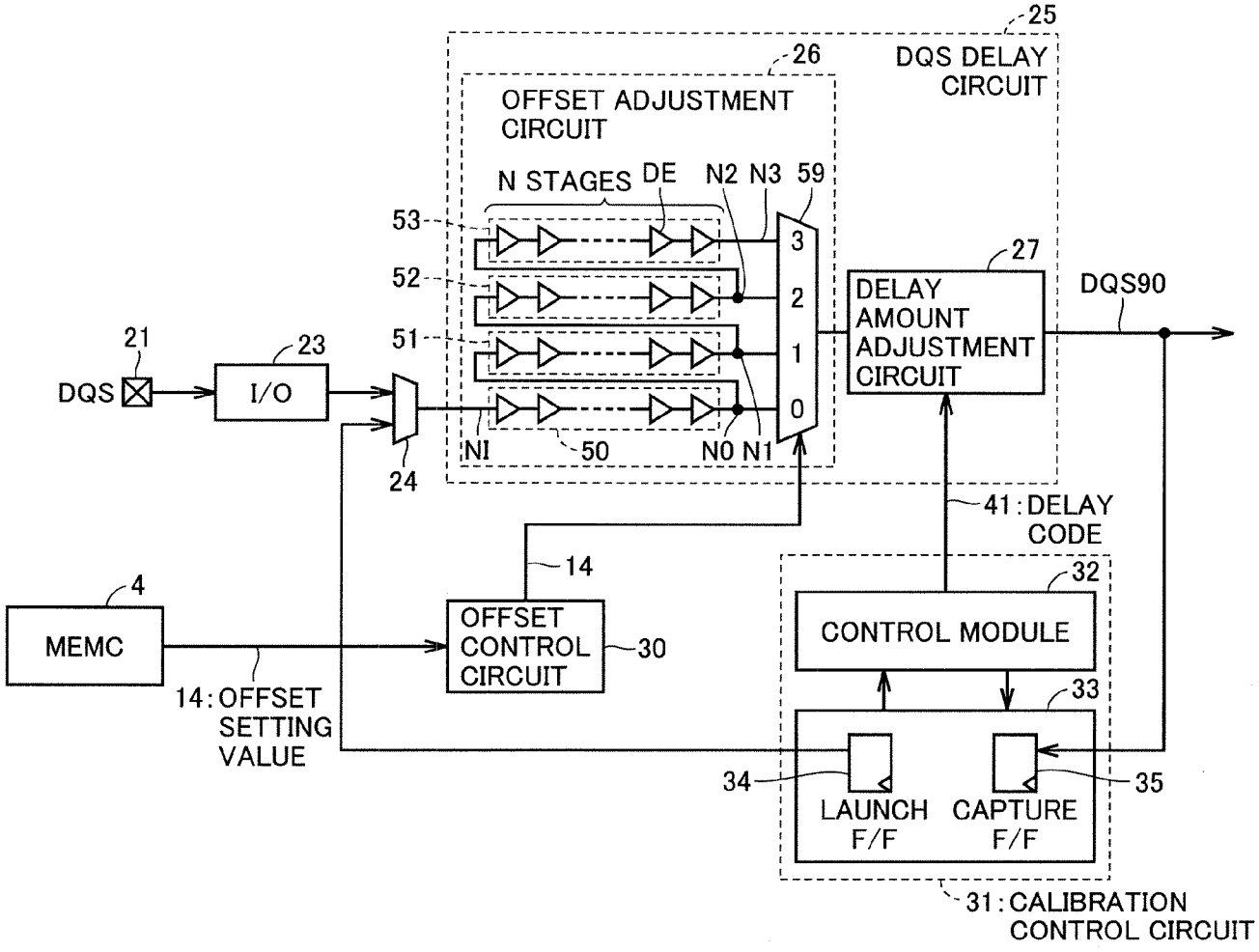
25
DQS DELAY CIRCUIT
26
OFFSET ADJUSTMENT CIRCUIT
N STAGES
DE
N2
N3
59
53
52
51
3
2
1
0
27
DELAY AMOUNT ADJUSTMENT CIRCUIT
DQS90
21
DQS
23
I/O
24
NI
50
N0
N1
41 : DELAY CODE
14
4
MEMC
OFFSET CONTROL CIRCUIT
30
32
CONTROL MODULE
33
14 : OFFSET SETTING VALUE
34
35
LAUNCH F/F
CAPTURE F/F
31 : CALIBRATION CONTROL CIRCUIT

FIG.7

BIT RATE (OPERATION FREQUENCY) f	OFFSET SETTING VALUE
f ≦ 266Mbps	3
266Mbps < f ≦ 333Mbps	2
333Mpbs < f ≦ 400Mbps	1
400Mbps < f ≦ 533Mbps	0

FIG.8

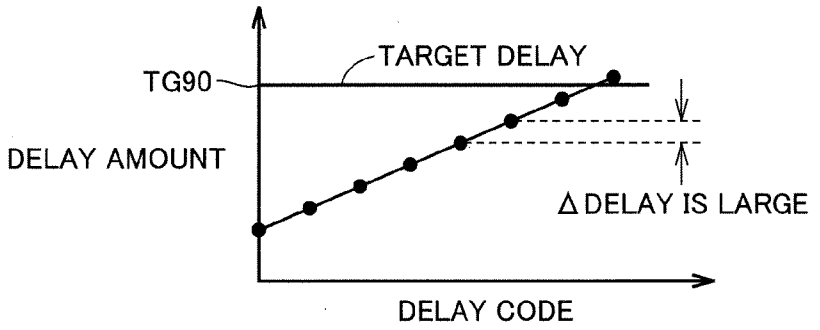

FIG.9

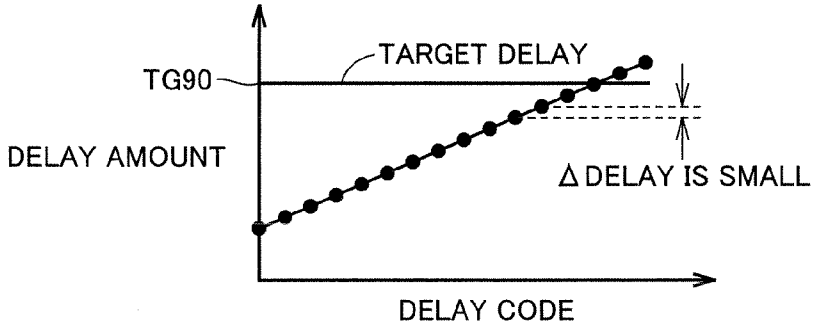

FIG.10

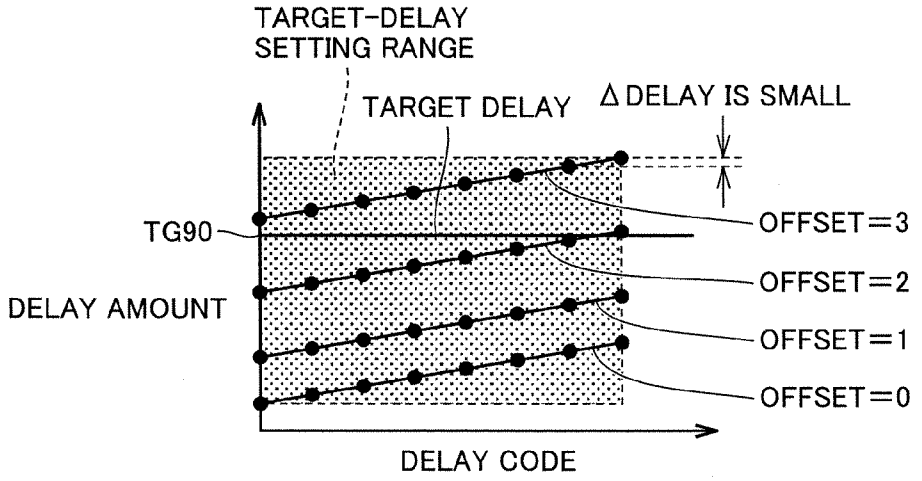

FIG.11

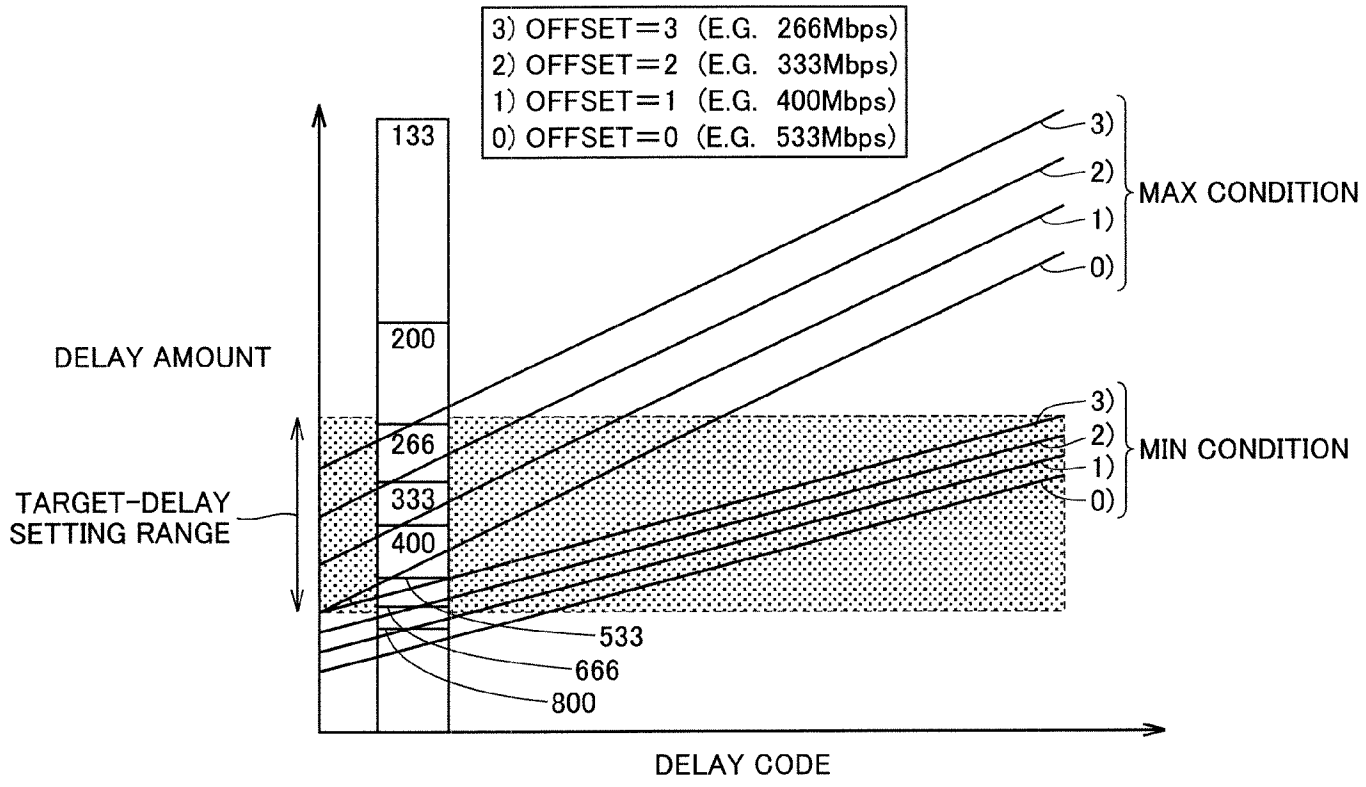
3) OFFSET=3 (E.G. 266Mbps)
2) OFFSET=2 (E.G. 333Mbps)
1) OFFSET=1 (E.G. 400Mbps)
0) OFFSET=0 (E.G. 533Mbps)
133
200
266
333
400
533
666
800
DELAY AMOUNT
TARGET-DELAY SETTING RANGE
DELAY CODE
MAX CONDITION
MIN CONDITION
3)
2)
1)
0)

FIG.12

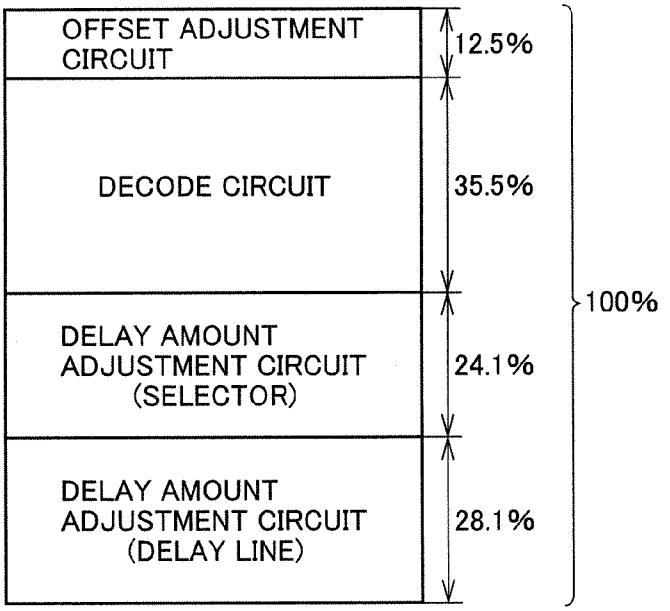
OFFSET ADJUSTMENT CIRCUIT
12.5%
DECODE CIRCUIT
35.5%
DELAY AMOUNT ADJUSTMENT CIRCUIT (SELECTOR)
24.1%
DELAY AMOUNT ADJUSTMENT CIRCUIT (DELAY LINE)
28.1%
100%

FIG.13

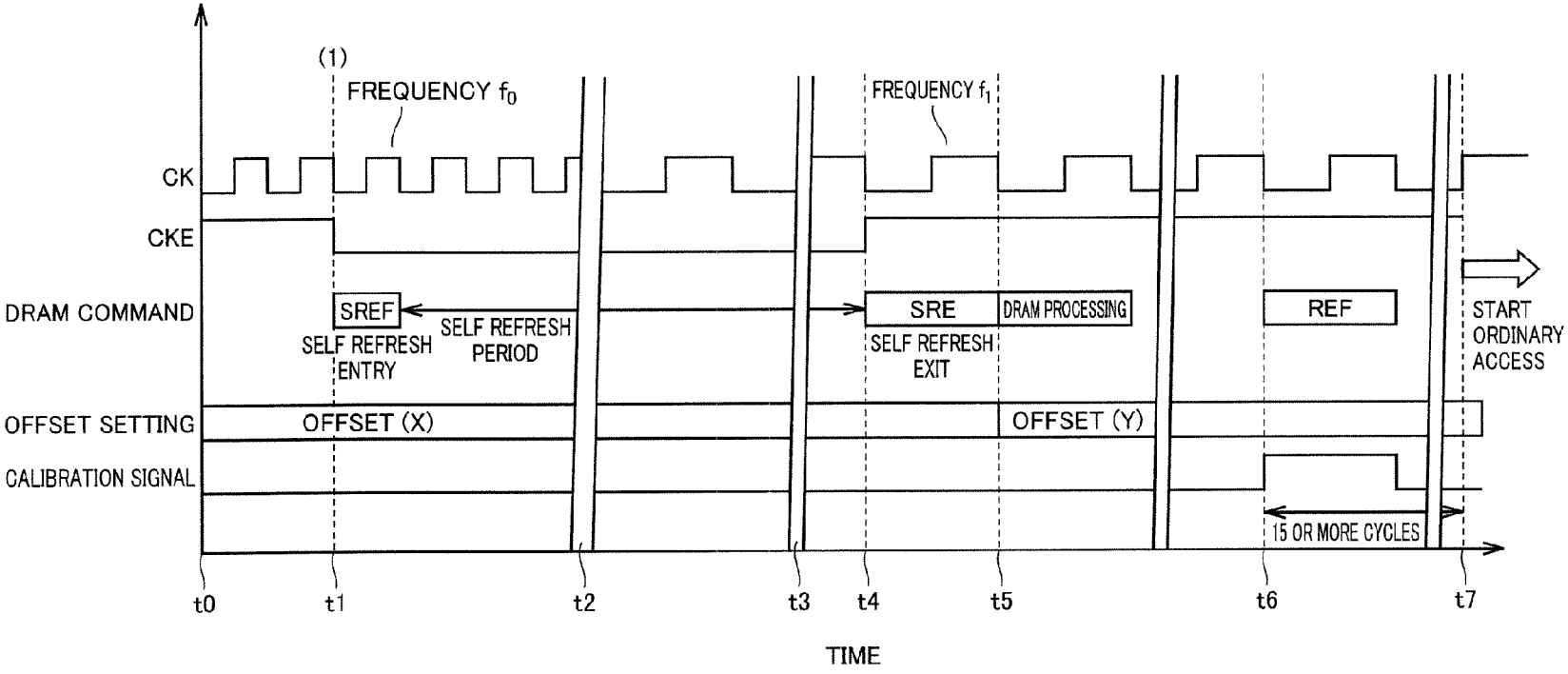
(1)
FREQUENCY f_0
FREQUENCY f_1
CK
CKE
DRAM COMMAND
SREF
SELF REFRESH ENTRY
SELF REFRESH PERIOD
SRE
SELF REFRESH EXIT
DRAM PROCESSING
REF
START ORDINARY ACCESS
OFFSET SETTING
OFFSET (X)
OFFSET (Y)
CALIBRATION SIGNAL
15 OR MORE CYCLES
t0
t1
t2
t3
t4
t5
t6
t7
TIME

FIG.14

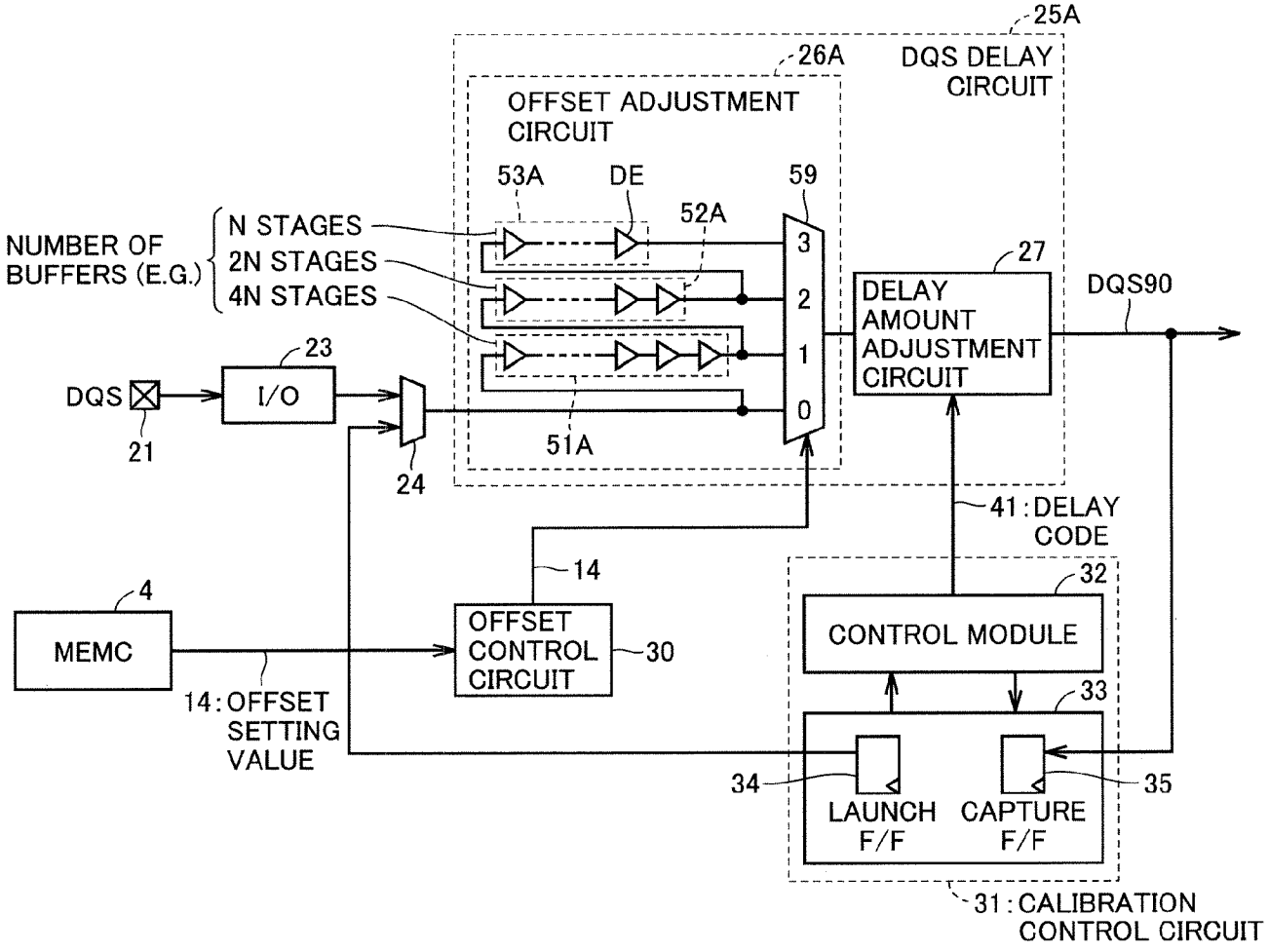
25A
DQS DELAY CIRCUIT
26A
OFFSET ADJUSTMENT CIRCUIT
53A
DE
59
52A
NUMBER OF BUFFERS (E.G.)
N STAGES
2N STAGES
4N STAGES
3
2
1
0
27
DELAY AMOUNT ADJUSTMENT CIRCUIT
DQS90
23
DQS
I/O
21
24
51A
41 : DELAY CODE
14
4
MEMC
OFFSET CONTROL CIRCUIT
30
32
CONTROL MODULE
33
14 : OFFSET SETTING VALUE
34
35
LAUNCH F/F
CAPTURE F/F
31 : CALIBRATION CONTROL CIRCUIT

FIG.15

BIT RATE (OPERATION FREQUENCY) f	OFFSET SETTING VALUE
f ≦ 200Mbps	3
200Mbps < f ≦ 266Mbps	2
266Mpbs < f ≦ 333Mbps	1
333Mbps < f ≦ 800Mbps	0

FIG.16

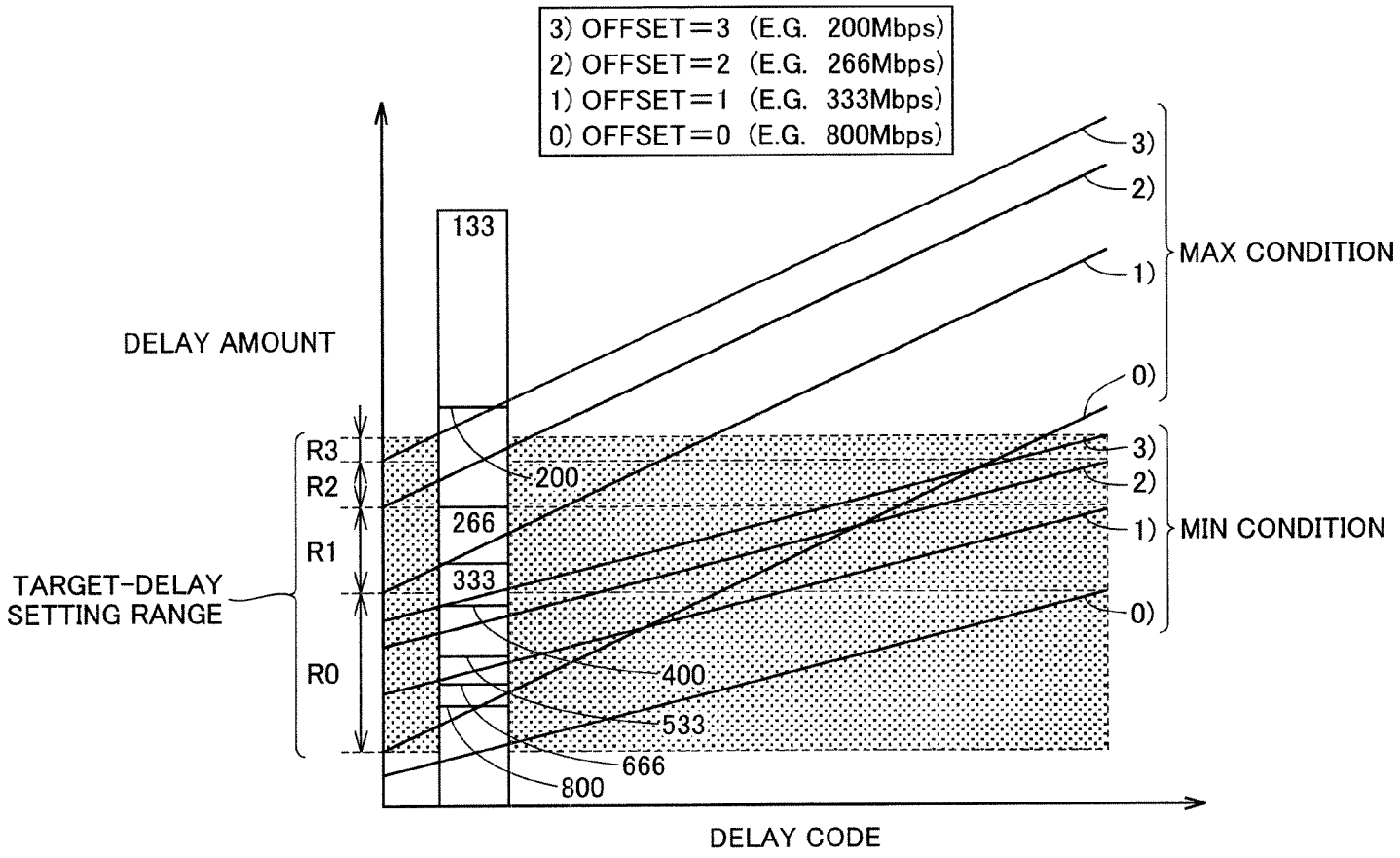
3) OFFSET=3 (E.G. 200Mbps)
2) OFFSET=2 (E.G. 266Mbps)
1) OFFSET=1 (E.G. 333Mbps)
0) OFFSET=0 (E.G. 800Mbps)
DELAY AMOUNT
DELAY CODE
TARGET-DELAY SETTING RANGE
R3
R2
R1
R0
133
266
333
200
400
533
666
800
MAX CONDITION
MIN CONDITION
3)
2)
1)
0)

FIG.17

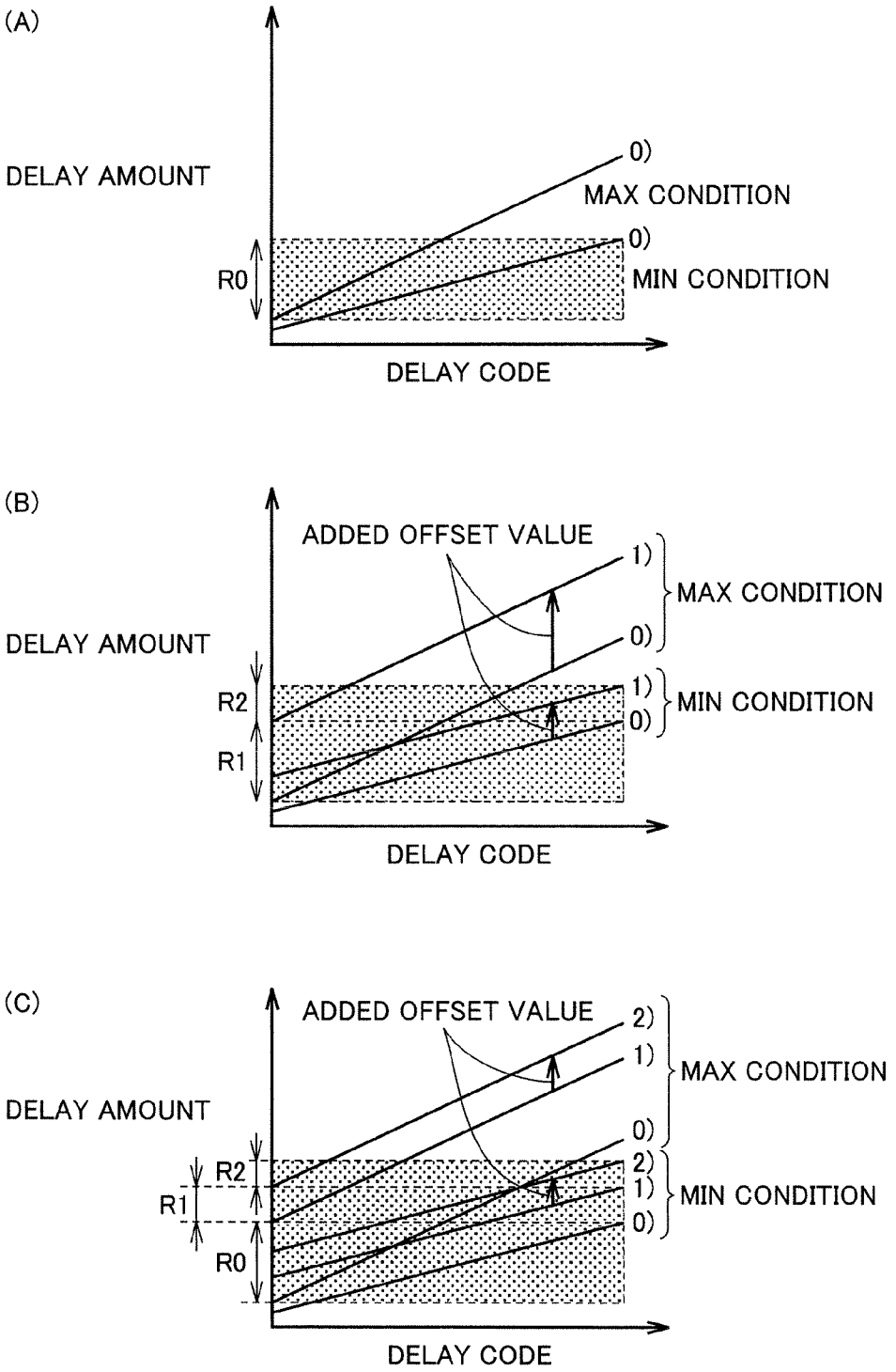
(A)
DELAY AMOUNT
0)
MAX CONDITION
0)
MIN CONDITION
R0
DELAY CODE
(B)
ADDED OFFSET VALUE
1)
0)
MAX CONDITION
DELAY AMOUNT
R2
R1
1)
0)
MIN CONDITION
DELAY CODE
(C)
ADDED OFFSET VALUE
2)
1)
0)
MAX CONDITION
DELAY AMOUNT
R2
R1
R0
2)
1)
0)
MIN CONDITION
DELAY CODE

FIG.18

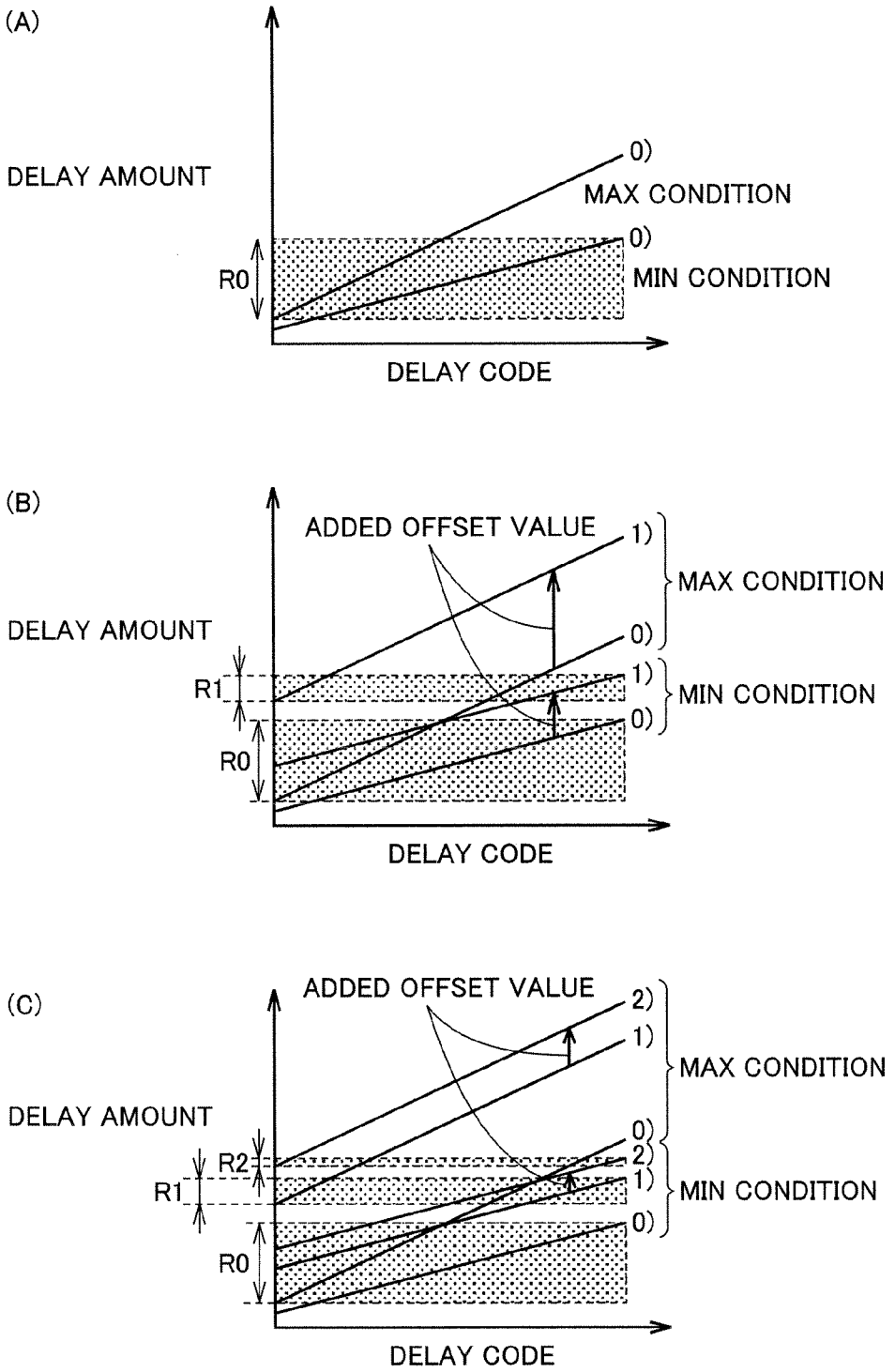
(A)
DELAY AMOUNT
0)
MAX CONDITION
0)
MIN CONDITION
R0
DELAY CODE
(B)
ADDED OFFSET VALUE
1)
MAX CONDITION
DELAY AMOUNT
0)
1)
MIN CONDITION
R1
0)
R0
DELAY CODE
(C)
ADDED OFFSET VALUE
2)
1)
MAX CONDITION
DELAY AMOUNT
0)
R2
2)
R1
1)
MIN CONDITION
0)
R0
DELAY CODE

FIG.19

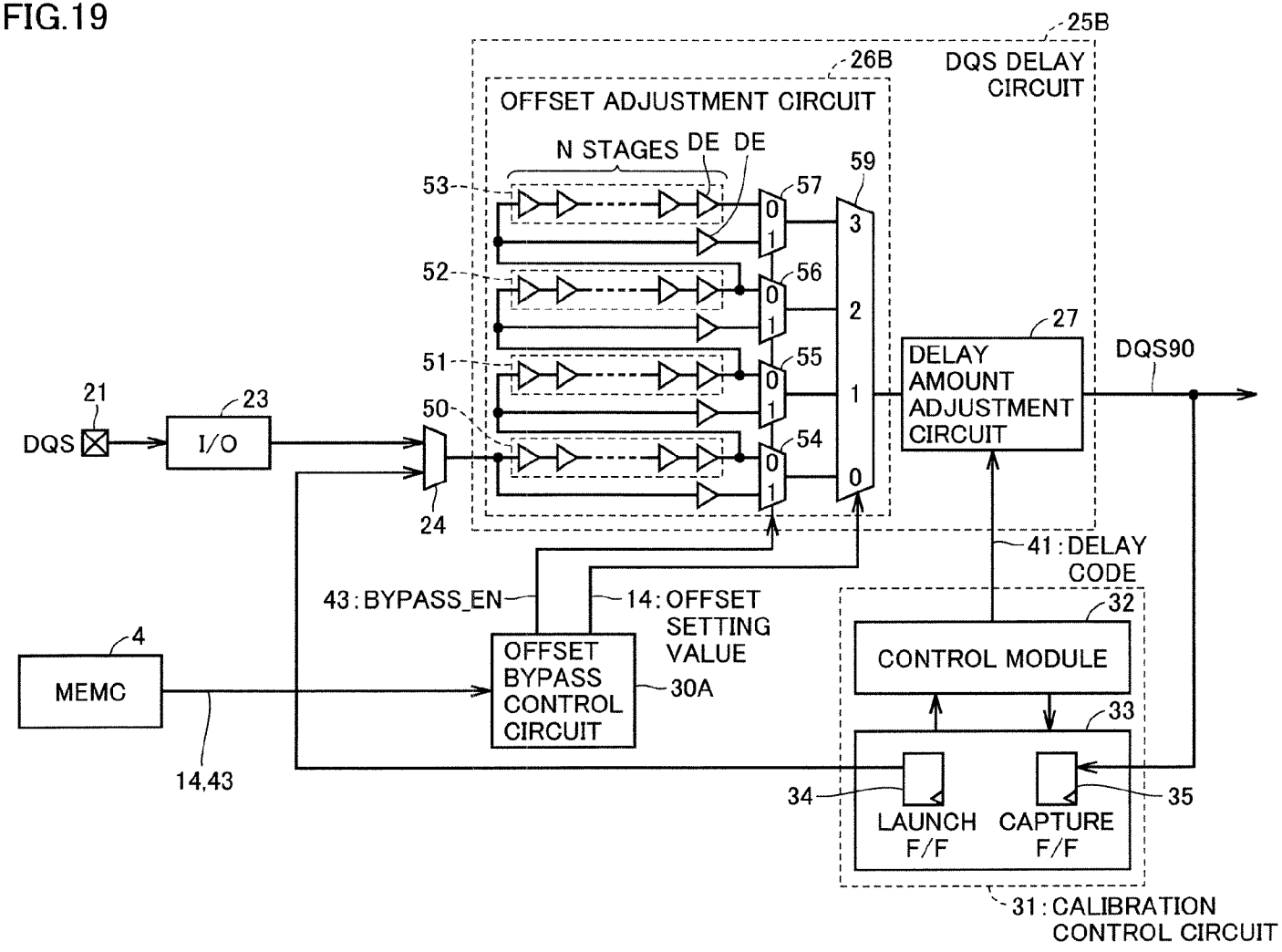
25B
DQS DELAY CIRCUIT
26B
OFFSET ADJUSTMENT CIRCUIT
N STAGES
DE
DE
53
52
51
50
57
56
55
54
59
3
2
1
0
27
DELAY AMOUNT ADJUSTMENT CIRCUIT
DQS90
21
DQS
23
I/O
24
41 : DELAY CODE
43 : BYPASS_EN
14 : OFFSET SETTING VALUE
4
MEMC
OFFSET BYPASS CONTROL CIRCUIT
30A
32
CONTROL MODULE
33
14,43
34
35
LAUNCH F/F
CAPTURE F/F
31 : CALIBRATION CONTROL CIRCUIT

FIG.20

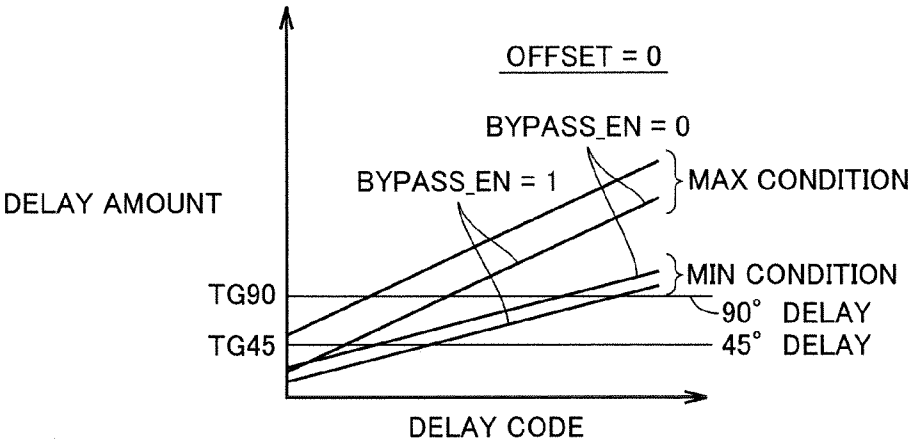
OFFSET = 0
BYPASS_EN = 0
BYPASS_EN = 1
MAX CONDITION
DELAY AMOUNT
MIN CONDITION
TG90
90° DELAY
TG45
45° DELAY
DELAY CODE

SEMICONDUCTOR INTEGRATED CIRCUIT CAPABLE OF PRECISELY ADJUSTING DELAY AMOUNT OF STROBE SIGNAL

CROSS-REFERENCE TO RELATED APPLICATIONS

This application is the U.S. National Phase of PCT/JP2011/080532 filed Dec. 29, 2011, the subject matter of which is incorporated herein by reference in entirety.

TECHNICAL FIELD

The present invention relates to a semiconductor device including an interface circuit to/from which data is input/output from/to a memory device, and particularly relates to a semiconductor device to/from which data is input/output from/to a double data rate (DDR) synchronous memory.

BACKGROUND ART

As a synchronous memory to/from which data is input/output at a double data rate, a DDR-SDRAM (Synchronous Dynamic Random Access Memory) for example is known. For the purpose of high-speed clock synchronous communication, the DDR-SDRAM outputs a data signal and a strobe signal synchronized with the data signal. The data signal and the strobe signal which are output from the DDR-SDRAM have respective edges that coincide with each other.

In the interface circuit receiving the data signal and the strobe signal which are output from the DDR-SDRAM, a delay circuit is necessary that delays the received strobe signal by a ¼ period. Delay of the input strobe signal by a ¼ period (corresponding to a phase of 90 degrees) enables the data signal to be taken at both the rising edge and the falling edge of the strobe signal.

As a circuit for adjusting the amount of delay of the strobe signal, a circuit disclosed in Japanese Patent Laying-Open No. 2008-311999 (PTD 1) for example is known. This circuit includes a variable delay unit providing a variable amount of delay, a phase comparison unit, and a delay control unit. The phase comparison unit compares the phase of the strobe signal given from an input buffer gate with the phase of a delay signal given from the variable delay unit. Based on the result of comparison by the phase comparison unit, the delay control unit sets the amount of delay of the variable delay unit.

An operation clock of the DDR-SDRAM is supplied as an external clock from the aforementioned interface circuit. Input/output of data to/from the DDR-SDRAM is synchronized with the external clock. Therefore, the DDR-SDRAM is provided with a regeneration circuit for regenerating an internal clock that is correctly synchronized with the external clock. As such a regeneration circuit, a PLL (Phase Lock Loop) circuit (see for example Japanese Patent Laying-Open No. 2000-323969 (PTD 2)), or a DLL (Delay Lock Loop) circuit (see for example Japanese Patent Laying-Open No. 2009-21706 (PTD 3)), or an SMD (Synchronous Mirror Delay) circuit (see for example Japanese Patent Laying-Open No. 2000-311028 (PTD 4)) is used, for example.

CITATION LIST

Patent Document

PTD 1: Japanese Patent Laying-Open No. 2008-311999
PTD 2: Japanese Patent Laying-Open No. 2000-323969

PTD 3: Japanese Patent Laying-Open No. 2009-21706
PTD 4: Japanese Patent Laying-Open No. 2000-311028

SUMMARY OF INVENTION

Technical Problem

It is necessary for the delay circuit provided in the interface circuit to make the delay amount of the delay circuit correctly identical to a target delay which is determined in accordance with the frequency of the strobe signal, namely the operation frequency of the memory device. Particularly in recent memory devices, the operation frequency of the memory device may be changed for use in order to reduce power consumption. Therefore, the delay amount must be adjusted for a wider frequency range than the conventional one.

The delay circuit is usually made up of many cascade-connected delay elements (inverters for example). The delay amount of the strobe signal is adjusted by changing the number of stages of delay elements through which the strobe signal is passed. Therefore, for accommodation to a wider frequency range, an increase of the number of delay elements has conventionally been unavoidable, which leads to an increase of the area occupied by the delay circuit.

Meanwhile, if the delay amount of each delay element is simply increased, an error relative to a target delay which is determined in accordance with the operation frequency of the memory device increases, resulting in a problem of a reduced margin of a setup time or hold time when data is read from the memory device.

An object of the present invention is to provide a semiconductor device including an interface circuit which receives a data signal and a strobe signal from a memory device, in such a manner that makes the delay amount correctly adjustable for a wider frequency range while reducing area penalty.

Solution to Problem

A semiconductor device according to an embodiment of the present invention includes a clock generator generating a clock signal having a set frequency, and an interface circuit. The interface circuit supplies an operation clock to an external memory device based on the clock signal, and receives a data signal and a strobe signal from the external memory device. The interface circuit includes a delay circuit delaying the received strobe signal, and a data detection circuit sampling the data signal at a timing of an edge of the delayed strobe signal. The delay circuit includes a first adjustment circuit and a second adjustment circuit connected in series with the first adjustment circuit. The first adjustment circuit is capable of adjusting a delay amount of the strobe signal in a plurality of steps in accordance with the set frequency of the clock signal. The second adjustment circuit is capable of adjusting the delay amount of the strobe signal with a higher precision than the first adjustment circuit.

Advantageous Effects of Invention

In accordance with the above-described embodiment, the delay circuit for delaying the strobe signal includes the first adjustment circuit and the second adjustment circuit capable of making adjustment with a higher precision than the first adjustment circuit. The delay amount of the first adjustment circuit is adjusted in a plurality of steps in accordance with the set frequency of the clock signal. Therefore, the delay

amount can accurately be adjusted for a wider frequency range while reducing area penalty.

BRIEF DESCRIPTION OF DRAWINGS

FIG. **1** is a block diagram showing a configuration of a semiconductor device **1** according to a first embodiment of the present invention.

FIG. **2** is a block diagram showing a configuration of a part of an interface circuit **5** in FIG. **1**.

FIG. **3** is a diagram schematically showing respective waveforms of a strobe signal DQS, a data signal DQ, and a delayed strobe signal DQS90.

FIG. **4** is a diagram schematically showing respective waveforms of clock signals CLKa, CLKb and a delayed pulse DQS90.

FIG. **5** is a diagram showing an example configuration of a delay amount adjustment circuit **27** in FIG. **2**.

FIG. **6** is a diagram showing an example configuration of an offset adjustment circuit **26** in FIG. **2**.

FIG. **7** is a diagram showing an example conversion table stored in a memory controller **4** in FIG. **1**.

FIG. **8** is a diagram schematically showing a relationship between a delay code and a delay amount of a DQS delay circuit in a comparative example (in the case where the unit of change of the delay amount is relatively large).

FIG. **9** is a diagram schematically showing a relationship between the delay code and the delay amount of the DQS delay circuit in a comparative example (in the case where the unit of change of the delay amount is relatively small).

FIG. **10** is a diagram schematically showing a relationship between delay code **41** and the delay amount of a DQS delay circuit **25** in FIG. **6**.

FIG. **11** is a diagram showing a relationship between the delay code and the delay amount of DQS delay circuit **25** in the case where the delay amount of each delay element DE is varied.

FIG. **12** is a diagram showing an example of the ratio of the area of each circuit which is a constituent element of DQS delay circuit **25**.

FIG. **13** a diagram showing an example operation sequence of semiconductor device **1** in FIG. **1**.

FIG. **14** is a diagram showing a configuration of a DQS delay circuit **25**A provided in a semiconductor device according to a second embodiment of the present invention.

FIG. **15** is a diagram showing an example conversion table stored in memory controller **4** for offset adjustment circuit **26**A in FIG. **14**.

FIG. **16** is a diagram showing a relationship between the delay code and the delay amount of DQS delay circuit **25**A in FIG. **14**.

FIG. **17** is a diagram for illustrating a procedure of determining the number of stages of delay elements provided in each delay line.

FIG. **18** is a diagram of a comparative example relative to FIG. **17**, for illustrating a case where the number of stages of delay elements provided in each delay line is inappropriate.

FIG. **19** is a diagram showing a configuration of a DQS delay circuit **25**B provided in a semiconductor device according to a third embodiment of the present invention.

FIG. **20** is a diagram showing, regarding DQS delay circuit **25**B in FIG. **19**, a relationship between the delay code and the delay amount of the whole delay circuit when the offset value is 0.

DESCRIPTION OF EMBODIMENTS

In the following, embodiments of the present invention will be described in detail with reference to the drawings. The same or corresponding parts are denoted by the same reference characters, and a description thereof will not be repeated.

First Embodiment

[Overall Configuration of Semiconductor Device 1]

FIG. **1** is a block diagram showing a configuration of a semiconductor device **1** according to a first embodiment of the present invention. Referring to FIG. **1**, semiconductor device **1** is configured in the form of SoC (System on Chip) where many functional blocks are integrated onto a semiconductor substrate. Specifically, semiconductor device **1** includes a central processing unit (CPU) **3** controlling the whole semiconductor device, an interface circuit **5**, a memory controller (MEMC) **4**, a PLL circuit **6**, and a clock generator **7**, for example.

Interface circuit **5** is connected with an external DRAM (Dynamic Random Access Memory) device **2** (DDR-SDRAM). Interface circuit **5** is a physical interface (DDR-PHY) for accessing DRAM device **2** at a double data rate. Specifically, interface circuit **5** outputs, to DRAM device **2**, a clock, various commands, address signals (row address, column address), and a data mask signal, for example.

Further, between interface circuit **5** and DRAM device **2**, data signal DQ and strobe signal DQS are input/output to/from each other. When data is read from DRAM device **2** into interface circuit **5**, DRAM device **2** outputs data signal DQ and strobe signal DQS with respective edges coincident with each other. In this case, interface circuit **5** delays the phase of strobe signal DQS by 90 degrees (¼ period) so that data is sampled at both the rising edge and the falling edge of strobe signal DQS. On the contrary, when data is written from interface circuit **5** into DRAM device **2**, interface circuit **5** outputs strobe signal DQS to DRAM device **2** with the edge of strobe signal DQS located at the center of a data eye.

Memory controller **4** is connected to interface circuit **5** and also to CPU **3** through a bus **8**. Memory controller **4** controls the operation of interface circuit **5** in accordance with instructions from CPU **3**. Specifically, memory controller **4** outputs, to interface circuit **5**, a command, an address, write data, and a signal for operation setting, for example, and receives read data from interface circuit **5**. Memory controller **4** further outputs an offset setting value **14** to an offset adjustment circuit **26** (described later herein in connection with FIG. **2**) provided in interface circuit **5**.

PLL circuit **6** generates a reference clock, and clock generator **7** generates a system clock CK based on the reference clock which is output from PLL circuit **6**. The operations of PLL circuit **6** and clock generator **7** are controlled by control signals **11**, **12** from CPU **3**. Accordingly, the frequency of system clock CK is set. The generated system clock CK is supplied to each part (such as CPU **3**, memory controller **4**, and interface circuit **5**) of semiconductor device **1**. Interface circuit **5** supplies an operation clock of DRAM device **2** based on system clock CK. Thus, the operation frequency of DRAM device **2** is determined in accordance with the set frequency of system clock CK.

Information regarding the set frequency of system clock CK (clock information) **13** is supplied from clock generator **7** to memory controller **4**. In memory controller **4**, a conversion table **4**A is stored for converting the set frequency of system clock CK (operation frequency of DRAM device **2**) into the offset setting value **14**. Based on conversion table **4**A, memory controller **4** determines the offset setting value **14** corresponding to the set frequency, and outputs the

determined offset setting value **14** to offset adjustment circuit **26** in FIG. **2** provided in interface circuit **5**.

[Configuration and General Operation of Interface Circuit **5**]

FIG. **2** is a block diagram showing a part of the configuration of interface circuit **5** in FIG. **1**. FIG. **2** shows the configuration of interface circuit **5** in FIG. **1**, particularly the configuration relevant to reading of data from DRAM device **2**. FIG. **2** further shows memory controller **4** in FIG. **1** as well as terminals **20** and **21** through which data signal DQ and strobe signal DQS are input/output, respectively.

Referring to FIG. **2**, interface circuit **5** includes input/output (I/O) buffer amplifiers **22**, **23**, a selector circuit **24**, a DQS delay circuit **25**, a data detection circuit **28**, an offset control circuit **30**, and a calibration control circuit **31**.

Data signal DQ which is input to terminal **20** from DRAM device **2** in FIG. **1** is input through buffer amplifier **22** to data detection circuit **28**. Strobe signal DQS which is input to terminal **21** from DRAM device **2** is input through buffer amplifier **23** to selector circuit **24**.

While interface circuit **5** performs a normal operation, selector circuit **24** selects strobe signal DQS which has been input through buffer amplifier **23** and outputs strobe signal DQS to DQS delay circuit **25** in the subsequent stage. In contrast, while interface circuit **5** performs a calibration operation, selector circuit **24** outputs a pulse signal which is output from calibration control circuit **31**, to DQS delay circuit **25** in the subsequent stage.

The above-described operation modes (normal mode and calibration mode) of interface circuit **5** and the selecting operation of selector circuit **24** in accordance with the operation mode are controlled by memory controller **4**. In the calibration mode, the delay amount of DQS delay circuit **25** is adjusted. In the normal mode, strobe signal DQS is delayed by the delay amount adjusted in the calibration mode.

DQS delay circuit **25** is provided for delaying the phase of strobe signal DQS by 90 degrees (¼ wavelength). DQS delay circuit **25** includes an offset adjustment circuit (first adjustment circuit) **26** and a delay amount adjustment circuit (second adjustment circuit) **27** connected in series to each other. Offset adjustment circuit **26** is capable of making a coarse adjustment, in multiple steps, of the delay amount of strobe signal DQS, in accordance with the offset setting value **14** (corresponding to the set frequency of system clock CK). Delay amount adjustment circuit **27** is capable of making a fine adjustment, with a higher precision than offset adjustment circuit **26**, of the delay amount of strobe signal DQS, in accordance with a delay code **41** which is output from calibration control circuit **31**. The order in which offset adjustment circuit **26** and delay amount adjustment circuit **27** are connected to each other may be reversed relative to that shown in FIG. **2**, namely offset adjustment circuit **26** may be in the stage subsequent to delay amount adjustment circuit **27**.

Data detection circuit **28** receives data signal DQ and strobe signal DQS90 having been delayed by DQS delay circuit **25**. Data detection circuit **28** samples data signal DQ at both timings of the rising edge and the falling edge of strobe signal DQS90 having been delayed.

FIG. **3** is a diagram schematically showing respective waveforms of strobe signal DQS, data signal DQ, and strobe signal DQS90 which has been delayed.

Referring to FIGS. **2** and **3**, data signal DQ which is input from DRAM device **2** in FIG. **1** has edges (time t**1**, t**3**, t**5**, t**7**) that coincide with the edges of strobe signal DQS. DQS delay circuit **25** delays strobe signal DQS90 by a ¼ period (a phase of 90 degrees). Data detection circuit **28** samples data signal DQ based on the delayed strobe signal DQS90 which is output from DQS delay circuit **25** in FIG. **2**. Accordingly, data detection circuit **28** can take each of data D0, D1, D2, D3 at the central position (time t**2**, t**4**, t**6**, t**8**) of a data eye.

Referring again to FIG. **2**, offset control circuit **30** outputs, to offset adjustment circuit **26**, the offset setting value **14** corresponding to the set frequency of system clock CK. As described above, the correlation between the set frequency of system clock CK (the operation frequency of DRAM device **2** in FIG. **1**) and the offset setting value **14** is stored in the form of conversion table **4**A in memory controller **4**. The offset setting value **14** based on conversion table **4**A is input to offset adjustment circuit **26**. The delay amount of offset adjustment circuit **26** is determined in accordance with the offset setting value **14**.

After the delay amount of offset adjustment circuit **26** is set in accordance with the offset setting value **14**, calibration control circuit **31** adjusts, in the calibration mode, the delay amount of delay amount adjustment circuit **27** so that the delay amount of DQS delay circuit **25** as a whole is identical to a target delay (specifically ¼ of the period corresponding to the operation frequency of DRAM device **2**) which is determined in accordance with system clock CK.

Specifically, calibration control circuit **31** includes a signal processing unit **33** having a pulse generator **34** and a phase comparator **35**, as well as a control module **32**. Clock signal CLKa acts as a trigger to cause pulse generator **34** to generate one-shot pulse. Phase comparator **35** compares the phase of delayed pulse DQS90 resulting from the pulse which is output from pulse generator **34** and passes through DQS delay circuit **25**, with the phase of clock signal CLKb.

Pulse generator **34** and phase comparator **35** can each be formed by a D flip-flop (F/F). A D flip-flop which forms pulse generator **34** is herein also referred to as launch flip flop (F/F), and a D flip-flop which forms phase comparator **35** is herein also referred to as capture flip-flop (F/F).

The phase of clock signal CLKb is adjusted so that it is delayed by 90 degrees relative to the phase of clock signal CLKa. Clock signals CLKa, CLKb may be supplied from clock generator **7** in FIG. **1** or generated by interface circuit **5** based on system clock CK. System clock CK may be used as clock signal CLKa.

In the calibration mode, control module **32** adjusts delay code **41** based on the result of comparison by phase comparator **35**, so that the phase of delayed pulse DQS90 which is output from DQS delay circuit **25** and the phase of clock signal CLKb coincide with each other. Delay code **41** corresponds to the delay amount of delay amount adjustment circuit **27**.

FIG. **4** is a diagram schematically showing respective waveforms of clock signals CLKa, CLKb and delayed pulse DQS90.

Referring to FIGS. **2** and **4**, the phase of clock signal CLKb is delayed by 90 degrees relative to the phase of clock signal CLKa. Namely, clock signal CLKb rises at t**2** delayed by a phase of 90 degrees relative to time t**1** at which clock signal CLKa rises.

The phase of the output pulse from pulse generator **34** coincides with the phase of clock signal CLKa. Meanwhile, the phase of delayed pulse DQS90 which is output from DQS delay circuit **25** is delayed, in accordance with delay code **41**, relative to the output pulse from pulse generator **34**.

Phase comparator **35** compares the phase of delayed pulse DQS90 with the phase of clock signal CLKb. In the case of FIG. **4**, the output of phase comparator **35** is determined in

accordance with the logic level of delayed pulse DQS90 at time t2. When the delay amount of delay amount adjustment circuit **27** is relatively small, the output of phase comparator **35** is high level (H level). In contrast, when the delay amount of delay amount adjustment circuit **27** is relatively large, the output of phase comparator **35** is low level (L level). Thus, switching of the output of phase comparator **35** from the H level to the L level or from the L level to the H level can be detected to determine whether or not the phase of delayed pulse DQS90 and the phase of clock signal CLKb coincide with each other.

Control module **32** utilizes switching of the logic level of the output of phase comparator **35** to determine delay code **41** by means of binary search. For example, when the delay amount of delay amount adjustment circuit **27** can be changed in 32 steps (5 bits), pulse generator **34** will output one-shot pulse five times before final delay code **41** is determined.

[Example Configuration of Delay Amount Adjustment Circuit **27**]

FIG. **5** is a diagram showing an example configuration of delay amount adjustment circuit **27** in FIG. **2**. Referring to FIG. **5**, delay amount adjustment circuit **27** includes a delay line **60** and a selector circuit **61**. In FIG. **5**, a signal is input to an input node IN, and the signal having been delayed is output from an output node OUT.

Delay line **60** includes a plurality of cascade-connected delay elements. In the example in FIG. **5**, 96 inverters INV are included as a plurality of delay elements. These inverters INV are divided into 32 blocks each made up of two or four series-connected inverters. The signal can be output from each block.

Selector circuit **61** selects one of the 32 blocks in accordance with delay code **41**, and outputs the signal provided from the selected block. In this way, the number of delay elements (inverters INV) through which strobe signal DQS passes after being input to and before being output from delay amount adjustment circuit **27** is changed.

Specifically, selector circuit **61** is made up of a plurality of logic gates (NAND gates and NOR gates) and includes first to fifth logic gate groups **62** to **66** arranged in hierarchy.

First logic gate group **62** is made up of 32 NAND gates associated respectively with the 32 blocks constituting delay line **60**. To a first input terminal of each NAND gate, the signal from the associated block is input. To a second input terminal thereof, delay code **41** is input. Regarding delay code **41**, only the signal which is input to the NAND gate associated with a selected block is "1" (H level), while the signals which are input to the NAND gates associated with the others, namely non-selected blocks are "0" (L level). In this respect, delay code **41** is different from the ordinary binary code. A decoder converting an ordinary binary code into delay code **41** is provided in control module **32** in FIG. **2**.

The 32 NAND gates constituting first logic gate group **62** are grouped into groups each including two NAND gates, and these groups are connected respectively to 16 NAND gates constituting second logic gate group **63**. Likewise, the 16 NAND gates constituting second logic gate group **63** are grouped into groups each including two NAND gates, and these groups are connected respectively to eight NOR gates constituting third logic gate group **64**. The eight NOR gates constituting third logic gate group **64** are grouped into groups each including two NOR gates, and these groups are connected respectively to four NAND gates constituting fourth logic gate group **65**. The four NAND gates constituting fourth logic gate group **65** are grouped into groups each including two NAND gates, and these groups are connected respectively to two NOR gates constituting fifth logic gate group **66**. A NAND gate **67** provided in the last stage in selector circuit **61** is connected to the two NOR gates provided in fifth logic gate group **66**.

[Example Configuration of Offset Adjustment Circuit **26**]

FIG. **6** is a diagram showing an example configuration of offset adjustment circuit **26** in FIG. **2**. FIG. **6** also shows peripheral circuitry of offset adjustment circuit **26**.

Referring to FIG. **6**, offset adjustment circuit **26** includes a delay line, which is made up of a plurality of delay elements DE connected in series between an input node NI and an output node N3, and a selector circuit **59**. These multiple delay elements DE are divided into M (M=4 in FIG. **6**) blocks **50**, **51**, **52**, **53**. Each block includes N stages of delay elements DE connected in series to each other.

The threshold voltage of an MOS transistor forming each delay element DE provided in offset adjustment circuit **26** is set higher than the threshold voltage of an MOS transistor forming each delay element provided in delay amount adjustment circuit **27**. In this way, with a smaller circuit area, the delay amount of each delay element DE provided in offset adjustment circuit **26** can be made larger than the delay amount of each delay element in delay amount adjustment circuit **27**.

Selector circuit **59** selects one of connection nodes N0, N1, N2 and an output node N3 of blocks **50** to **53**, and outputs a signal provided from the selected node. Specifically, in FIG. **6**, selector circuit **59** outputs the signal of connection node NO when the offset setting value is 0. In this case, from offset adjustment circuit **26**, strobe signal DQS having passed through block **50** is output. Likewise, selector circuit **59** outputs the signal of connection node N1 when the offset setting value is 1. In this case, from offset adjustment circuit **26**, strobe signal DQS having passed through blocks **50**, **51** is output. Selector circuit **59** outputs the signal of connection node N2 when the offset setting value is 2. In this case, from offset adjustment circuit **26**, strobe signal DQS having passed through blocks **50**, **51**, **52** is output. Selector circuit **59** outputs the signal of output node N3 when the offset setting value is 3. In this case, from offset adjustment circuit **26**, strobe signal DQS having passed through blocks **50**, **51**, **52**, **53** is output. The specific configuration of selector circuit **59** is similar for example to the configuration of selector circuit **61** shown in FIG. **5**.

In this way, in accordance with the offset setting value, selector circuit **59** can change the number of blocks (namely the number of delay elements) through which strobe signal DQS passes after being input to and before being output from offset adjustment circuit **26**. The correlation between the set frequency and the offset setting value is determined so that the number of blocks through which strobe signal DQS passes before being output from offset adjustment circuit **26** is larger as the set frequency of system clock CK in FIG. **1** is lower.

FIG. **7** is a diagram showing an example conversion table stored in memory controller **4** in FIG. **1**. In the example in FIG. **7**, the offset setting value is defined in connection with the bit rate (equal to the operation frequency of the DRAM device) approximately from 266 Mbps to 533 Mbps. Namely, for this range of the operation frequency, the delay amount is adjustable.

The configuration of offset adjustment circuit **26** is not limited to the configuration shown in FIG. **6**. For example, instead of selector circuit **59**, another selector circuit may be disposed in the vicinity of input node NI, and this selector circuit may be used to change the passage of strobe signal

DQS which has been input to input node NI. Thus, the order in which blocks **50** to **53** are arranged can be reversed relative to that in FIG. **5**.

Taking the above into account, a more general description of the function of selector circuit **59** is given in the following. It is supposed that a plurality of delay elements DE provided in offset adjustment circuit **26** are divided into M blocks from the first block to the M-th block, and further supposed that i is an integer of 1 or more and M or less. Then, in accordance with the offset setting value, selector circuit **59** outputs strobe signal DQS having passed through none of M blocks or having passed through first to i-th blocks in order among the M blocks. In the case where the strobe signal passes through none of the M blocks, the delay amount of the strobe signal is set by delay amount adjustment circuit **27** only.

[Problem of Conventional DQS Delay Circuit]

Before a description of the effects of DQS delay circuit **25** having the configuration shown in FIG. **6** is given, a description of a problem of a conventional DQS delay circuit will be made. Referring to FIGS. **8** and **9**, a case will now be described where offset adjustment circuit **26** for making a coarse adjustment of the delay amount is not provided.

Regarding the DRAM device, the operation frequency of the DRAM device may be changed for use in some cases for reducing power consumption. Specifically, if the maximum operation frequency is increased to thereby expand the frequency range, there arises the necessity to increase the number of delay elements constituting the delay line. For example, if the maximum rate of transfer to/from the DRAM device which has been 400 Mbps is to be changed to 533 Mbps, it becomes necessary to increase the number of steps in which the delay amount is changed by means of the delay line, from 32 steps to 64 steps or more. Accordingly, the circuit area is increased.

FIG. **8** is a diagram schematically showing a relationship between the delay code and the delay amount of a DQS delay circuit in a comparative example. In the example in FIG. **8**, there is shown that the number of delay elements constituting the delay line and the number of steps in which the delay amount is changed (FIG. **8** shows that the number of steps is eight) are not changed while the delay amount of the unit delay element is made larger to thereby increase the unit of change (ΔDELAY) of the delay amount.

If the delay amount of the unit delay element which is a constituent element of the delay line is simply set large for the purpose of accommodation to a wider frequency range as shown in FIG. **8**, an error relative to a target delay is increased. Accordingly, a problem arises such as a reduced margin of a setup time or a reduced margin of a hold time when data is read from the DRAM device, for example.

FIG. **9** is a diagram schematically showing a relationship between the delay code and the delay amount of the DQS delay circuit in a comparative example. In the example in FIG. **9**, there is shown that the delay amount of the unit delay element is made smaller to thereby decrease the unit of change (ΔDELAY) of the delay amount.

In the case as shown in FIG. **9** where the delay amount of the unit delay element which is a constituent element of the delay line is small, it is unavoidable, for accommodation to a wider frequency range, an increase of the number of delay elements or an increase of the number of steps in which the delay amount is changed (16 steps in FIG. **9**). Accordingly, the circuit area is undesirably increased. In particular, because the delay amount of the delay element varies depending on variation of the manufacturing conditions as well as the operation temperature and the operation voltage of the semiconductor device, a target delay amount may be difficult to attain in the case where the delay amount of the delay element is assumed to be smallest.

[Operation and Effects of DQS Delay Circuit **25** in the First Embodiment]

In the case of DQS delay circuit **25** shown in FIG. **6**, accommodation to a wider range of the frequency is possible with the unit of change (ΔDELAY) of the delay amount kept small. Moreover, an increase of the circuit area can be suppressed.

FIG. **10** is a diagram schematically showing a relationship between delay code **41** and the delay amount of DQS delay circuit **25** in FIG. **6**. FIG. **10** illustrates the case where the configuration of delay amount adjustment circuit **27** in FIG. **6** is simplified as compared with the configuration shown as an example in FIG. **5**. Namely, the delay amount of delay amount adjustment circuit **27** is adjustable in eight steps and respective units of change (ΔDELAY) of the delay amount for these steps are equal to each other.

As shown in FIG. **10**, the offset setting value is changed (OFFSET=0 to 3 in the case of FIG. **10**) so that the line representing the relationship between the delay amount and delay code **41** of DQS delay circuit **25** in FIG. **6** is shifted upward/downward with its slope maintained. In this way, the range in which a target delay TG90 is set can be expanded.

The delay amount of each delay element DE varies depending on variation of the manufacturing conditions of the semiconductor device as well as variation of the operation voltage and the operation temperature of the delay circuit. Offset adjustment circuit **26** should be designed taking this variation into account, and the number of stages N of delay elements DE provided in each of blocks **50** to **53** should be determined so that a delay amount appropriate for the operation frequency is obtained even when the delay amount of each delay element is smallest.

FIG. **11** is a diagram showing a relationship between the delay code and the delay amount of DQS delay circuit **25** in the case where the delay amount of each delay element DE is varied. In FIG. **11**, the condition that the assumed delay amount of each delay element DE is minimum is referred to as MIN condition while the condition that the assumed delay amount of each delay element DE is maximum is referred to as MAX condition.

Referring to FIGS. **6** and **11**, when the bit rate is 533 Mbps, the offset value (OFFSET) can be set to 0 to thereby set the delay amount of the whole DQS delay circuit **25** to a target delay (delay of 90°) under both the MAX condition and the MIN condition. Likewise, when the bit rate is 400 Mbps, 333 Mbps, and 266 Mbps, the offset setting value (OFFSET) can be 1, 2, and 3, respectively, to thereby set the delay amount of the whole DQS delay circuit **25** to a target delay (delay of 90°) under both the MAX condition and the MIN condition.

The lower limit of the range in which the target delay is set is provided when the assumed delay amount of each delay element DE is maximum (MAX condition) under the conditions that the delay amount of offset adjustment circuit **26** is minimum (the offset setting value (OFFSET)=0) and the delay amount of delay amount adjustment circuit **27** is minimum (the delay code is minimum). The upper limit of the range in which the target delay is set is provided when the assumed delay amount of each delay element DE is minimum (MIN condition) under the conditions that the delay amount of offset adjustment circuit **26** is maximum (the offset setting value (OFFSET)=3) and the delay amount of delay amount adjustment circuit **27** is maximum (the delay code is maximum).

FIG. **12** is a diagram showing an example of the ratio of the area of each circuit which is a constituent element of DQS delay circuit **25**. FIG. **12** shows the ratio between the area of offset adjustment circuit **26** shown in FIG. **6**, the area of delay line **60** which is a constituent element of delay amount adjustment circuit **27** in FIG. **5**, the area of selector circuit **61** in FIG. **5**, and the area of a decode circuit provided in control module **32** in FIG. **6**. The decode circuit is provided for converting a binary code into delay code **41** to be input to selector circuit **61**. As shown in FIG. **12**, the area of offset adjustment circuit **26** is smaller than the areas of the other circuits. It is seen from this that an increase of the circuit area can be suppressed.

[Operation Sequence of Semiconductor Device **1**]

FIG. **13** is a diagram showing an example operation sequence of semiconductor device **1** in FIG. **1**. FIG. **13** shows the example where the operation frequency of the DRAM device is changed from f_0 to f_1.

Referring to FIGS. **1** and **13**, the set frequency of system clock CK is f_0 in an initial state (time t**0**). It is supposed that the offset setting value (OFFSET) corresponding to this set frequency f_0 is X.

At time t**1**, memory controller **4** issues a self refresh entry (SREF) command. Accordingly, a self refresh period is started. Simultaneously, clock enable signal CKE is negated.

In the subsequent period t**2**, CPU **3** changes the set frequency of system clock CK. Since clock enable signal CKE has been negated, stoppage of system clock CK during change of the frequency causes no problem. The next period t**3** is a standby period which lasts until the frequency of system clock CK becomes stable at f_1.

At subsequent time t**4**, memory controller **4** issues a self refresh exit (SRE) command. Accordingly, the self refresh period is ended. Simultaneously, clock enable signal CKE is asserted.

At the next time t**5**, memory controller **4** changes the offset setting value to a value (Y) corresponding to set frequency f_1. Memory controller **4** further issues a processing command (such as precharge command for example) which can be executed by DRAM device **2** at this time.

At the next time t**6**, memory controller **4** issues an auto refresh (REF) command. Further, memory controller **4** asserts a calibration signal and accordingly the operation state of interface circuit **5** is changed to the calibration mode. Calibration control circuit **31** in FIG. **6** performs calibration of delay amount adjustment circuit **27** provided in DQS delay circuit **25** in FIG. **6**, based on the offset setting value (Y) which has been changed. The calibration of delay amount adjustment circuit **27** takes 15 or more cycles.

At or after time t**7** at which refresh of DRAM device **2** and calibration of delay amount adjustment circuit **27** are ended, ordinary DRAM access is started.

[Summary]

As seen from the foregoing, semiconductor device **1** in the first embodiment provides DQS delay circuit **25** including offset adjustment circuit **26** which is capable of adjusting the delay amount in accordance with the offset setting value, as shown in FIGS. **2** and **6**. Accordingly, without extension of the delay line provided in delay amount adjustment circuit **27**, the maximum operation frequency can be increased and the range of frequency which can be accommodated can be expanded.

Further, the delay amount of the unit delay element which is a constituent element of the delay line provided in delay amount adjustment circuit **27** can be designed to be relatively small to thereby reduce a delay error relative to a target delay. When calibration is performed, the delay elements each having a relatively small delay amount that are provided in delay amount adjustment circuit **27** can be used to adjust the delay amount with high precision.

The delay amount (the number of delay elements DE) of each block in offset adjustment circuit **26** is determined in consideration of variation of the delay amount of unit delay element DE caused by variation of the manufacturing conditions, the operation temperature, and the operation voltage. It is therefore unnecessary to increase the number of delay elements provided in delay amount adjustment circuit **27**.

Further, the threshold voltage of an MOS transistor forming each delay element DE provided in offset adjustment circuit **26** is set higher than the threshold voltage of an MOS transistor forming each delay element provided in delay amount adjustment circuit **27**. Accordingly, the delay amount of each delay element DE provided in offset adjustment circuit **26** can be made larger than the delay amount of each delay element in the delay amount adjustment circuit. Thus, an increase of the circuit area due to newly provided offset adjustment circuit **26** can be suppressed.

Second Embodiment

FIG. **14** is a diagram showing a configuration of a DQS delay circuit **25**A provided in a semiconductor device according to a second embodiment of the present invention.

DQS delay circuit **25**A in FIG. **14** differs from DQS delay circuit **25** in FIG. **6** in terms of the configuration of an offset adjustment circuit **26**A. In offset adjustment circuit **26** in FIG. **6**, respective numbers of delay elements provided in blocks **50** to **53** are equal to each other. In contrast, in offset adjustment circuit **26**A in FIG. **14**, respective numbers of delay elements provided in blocks **51**A, **52**A, **53**A and constitute the delay line differ from each other.

Specifically, blocks **51**A, **52**A, **53**A in FIG. **14** correspond to blocks **51**, **52**, **53** in FIG. **6**, respectively. For example, block **51**A is provided with N stages of delay elements DE, block **52**A is provided with 2N stages of delay elements DE, and block **53**A is provided with 4N stages of delay elements DE. As will be detailed later herein, respective numbers of delay elements constituting the blocks can be made different from each other to expand the range in which the operation frequency is set, as compared with the case of the first embodiment.

In offset adjustment circuit **26**A in FIG. **14**, a block corresponding to block **50** in FIG. **6** is not provided. When the offset setting value is 0 in FIG. **14**, strobe signal DQS is input to delay amount adjustment circuit **27** without passing through delay elements DE. In this case, the delay amount of the whole DQS delay circuit **25**A is adjusted by delay amount adjustment circuit **27**. Other features in FIG. **14** are identical to those in FIG. **6**. Therefore, the same or corresponding parts are denoted by the same reference characters, and the description thereof will not be repeated.

FIG. **15** is a diagram showing an example conversion table stored in memory controller **4** for offset adjustment circuit **26**A in FIG. **14**. In the example in FIG. **15**, the offset setting value is defined in connection with the bit rate (equal to operation frequency f of the DRAM device) approximately from 200 Mbps to 800 Mbps. The range in which the operation frequency is set is expanded relative to the case in FIG. **7**.

FIG. **16** is a diagram showing a relationship between the delay code and the delay amount of DQS delay circuit **25**A in FIG. **14**. Referring to FIG. **16**, when the manufacturing conditions, the operation temperature, and the operation

voltage of the semiconductor device vary, the condition that the assumed delay amount of each delay element DE is maximum is herein referred to as MAX condition while the condition that the assumed delay amount of each delay element DE is minimum is herein referred to as MIN condition. Supposing that the ranges in which the target delay is set when the offset setting value (OFFSET) is 0 to 3 are R0 to R3, respectively, the target-delay setting ranges R0 to R3 are successive without overlapping each other.

In order to allow the target-delay setting ranges R0 to R3 to be successive without overlapping each other as described above, the delay amount of the whole delay circuit when the MIN condition is met, the offset setting value is 0, and the delay amount of delay amount adjustment circuit **27** is maximum (the delay amount: upper limit of target-delay setting range R0) is made identical to the delay amount of the whole delay circuit when the MAX condition is met, the offset setting value is 1, and the delay amount of delay amount adjustment circuit **27** is minimum (the delay amount: lower limit of target-delay setting range R1). Likewise, the delay amount of the whole delay circuit when the MIN condition is met, the offset setting value is 1, and the delay amount of delay amount adjustment circuit **27** is maximum (the delay amount: upper limit of target-delay setting range R1) is made identical to the delay amount of the whole delay circuit when the MAX condition is met, the offset setting value is 2, and the delay amount of delay amount adjustment circuit **27** is minimum (the delay amount: lower limit of target-delay setting range R2). Further, the delay amount of the whole delay circuit when MIN condition is met, the offset setting value is 2, and the delay amount of delay amount adjustment circuit **27** is maximum (the delay amount: upper limit of target-delay setting range R2) is made identical to the delay amount of the whole delay circuit when the MAX condition is met, the offset setting value is 3, and the delay amount of delay amount adjustment circuit **27** is minimum (the delay amount: lower limit of target-delay setting range R3).

A more general description of the above is as follows. It is supposed that a plurality of series-connected delay elements DE provided in offset adjustment circuit **26** are divided into M blocks from first to M-th blocks. It is further supposed that an integer of 1 or more and M or less is represented by i. In accordance with the offset setting value, selector circuit **59** outputs strobe signal DQS which has passed through none of the M blocks or passed through i blocks from the first block to the i-th block in order among M blocks. Here, it is supposed that an integer of 1 or more and M−1 or less is represented by j. Then, the maximum value of the delay amount which can be set by the delay circuit as a whole when the signal having passed through j blocks from first to j-th blocks is output from offset adjustment circuit **26** and the MIN condition is met, is equal to or larger than the minimum value of the delay amount which can be set by the delay circuit as a whole when the signal having passed through j+1 blocks from first to j+1-th blocks is output from offset adjustment circuit **26** and the MAX condition is met. When the former is equal to the latter, the target-delay setting ranges corresponding respectively to the offset setting values are successive without overlapping each other. When the former is larger than the latter, the target-delay setting ranges corresponding respectively to the offset setting values overlap each other.

In this way, target-delay setting ranges R0 to R3 corresponding respectively to the offset setting values are defined so that they do not overlap each other. Accordingly, the target-delay setting range of DQS delay circuit **25**A as a whole can be expanded relative to that in the first embodiment. Other effects of the second embodiment are similar to those of the first embodiment. For example, the delay amount of unit delay element DE provided in delay amount adjustment circuit **27** can be set relatively small to thereby achieve the effect of reducing the delay error. In the following, the target-delay setting range will further be described with reference to FIGS. **17** and **18**.

FIG. **17** is a diagram for illustrating a procedure of determining the number of stages of delay elements provided in each delay line.

Referring to FIG. **17** (A), the delay characteristic (relationship between the delay amount and the delay code of the whole DQS delay circuit) in the case where the offset setting value is 0 is first plotted to confirm target-delay setting range R0. The upper limit of target-delay setting range R0 is obtained when the MIN condition is met and the delay code is maximum.

Referring next to FIG. **17** (B), the delay amount (the number of delay elements) of block **51**A in FIG. **14** is determined so that the upper limit of target-delay setting range R0 is equal to the delay amount obtained under the conditions that the offset setting value is 1, the MAX condition is met, and the delay code is minimum. In accordance with the delay amount (the number of delay elements) of block **51**A, an added offset value in FIG. **17** (B) is determined. The delay amount of block **51**A is thus determined and accordingly target-delay setting range R0 in the case where the offset setting value is 0 and target-delay setting range R1 in the case where the offset setting value is 1 do not overlap each other and respective boundaries of these ranges R0 and R1 coincide with each other.

Referring next to FIG. **17** (C), the delay amount (the number of delay elements) of block **52**A in FIG. **14** is determined so that the upper limit of target-delay setting range R1 is equal to the delay amount obtained under the conditions that the offset setting value is 2, the MAX condition is met, and the delay code is minimum. In accordance with the delay amount (the number of delay elements) of block **52**A, an added offset value in FIG. **17** (C) is determined. The above process can be repeated to expand the target-delay setting range of the whole DQS delay circuit.

The added offset value in FIG. **17** (C) is smaller than the added offset value in FIG. **17** (B). In other words, the delay amount (the number of delay elements) of block **52**A is smaller than the delay amount (the number of delay elements) of block **51**A in FIG. **14**. This relationship may more generally be described as follows.

It is supposed that a plurality of series-connected delay elements DE provided in offset adjustment circuit **26**A are divided into M blocks from first to M-th blocks. It is further supposed that an integer of 1 or more and M or less is represented by i. Then, in accordance with the offset setting value, selector circuit **59** outputs strobe signal DQS which has passed through none of the M blocks or passed through i blocks from the first block to the i-th block in order among the M blocks. Here, it is supposed that an integer of 1 or more and M−1 or less is represented by j. Then, the number of delay elements included in the j-th block is larger than the number of delay elements included in the j+1-th block.

FIG. **18** is a diagram of a comparative example relative to FIG. **17**, for illustrating a case where the number of stages of delay elements provided in each delay line is inappropriate. FIG. **18** (A) is identical to FIG. **17** (A). The upper limit of target-delay setting range R0 is obtained when the MN condition is met and the delay code is maximum.

Referring to FIG. **18** (B), if the delay amount under the conditions that the offset setting value is 1, the MAX condition is met, and the delay code is minimum (the delay amount: lower limit of target-delay setting range R1) is larger than the upper limit of target-delay setting range R0, there arises a gap between target-delay setting range R0 and target-delay setting range R1. In the range corresponding to the gap, the delay amount cannot be set. As compared with FIG. **17** (B), the delay amount (the number of delay elements) of block **51**A is set larger in FIG. **18** (B). Therefore, the added offset value is too large, resulting in the gap between ranges R0 and R1.

Referring to FIG. **18** (C), if the delay amount under the conditions that the offset setting value is 2, the MAX condition is met, and the delay code is minimum (the delay amount: lower limit of target-delay setting range R2) is larger than the upper limit of target-delay setting range R1, there also arises a gap between target-delay setting range R1 and target-delay setting range R2. As compared with FIG. **17** (C), the delay amount (the number of delay elements) of block **52**A is set larger in FIG. **18** (C). Therefore, the added offset value is too large, resulting in the gap between ranges R1 and R2.

Third Embodiment

Interface circuit **5** in a third embodiment further has a test mode as an operation mode. In the test mode, the delay amount of the DQS delay circuit is made smaller than the delay amount (90°) in the normal mode so that a setup margin test can be performed. The normal mode and the test mode are switched to each other by means of a bypass enable signal (BYPASS-EN). In the following, a more specific description will be given with reference to FIGS. **19** and **20**.

FIG. **19** is a diagram showing a configuration of a DQS delay circuit **25**B provided in a semiconductor device according to the third embodiment of the present invention. In an offset adjustment circuit **26**B of DQS delay circuit **25**B in FIG. **19**, one or a plurality of bypass lines are provided for the test mode. Each bypass line is provided in parallel with a part of a delay line which is used in the normal mode. The delay amount of the bypass line is determined based on the characteristic of the whole DQS delay circuit **25**B.

Specifically, in the case of offset adjustment circuit **26**B in FIG. **19**, the bypass lines are provided in parallel with blocks **50** to **53**, respectively, which are described above in connection with FIG. **6**. Each bypass line includes only one delay element DE, and therefore the delay amount of the bypass line is smaller than the delay amount of its associated block connected in parallel with the bypass line.

Offset adjustment circuit **26**B further includes selector circuits **54** to **57**. When a bypass enable signal **43** is activated to indicate H level ("1"), selector circuit **54** outputs to selector circuit **59** a signal which has passed through the associated bypass line, instead of a signal having passed through block **50**. Likewise, when bypass enable signal **43** is being activated, selector circuit **55** outputs to selector circuit **59** a signal having passed through the associated bypass line, instead of a signal having passed through block **51**. When bypass enable signal **43** is being activated, selector circuit **56** outputs to selector circuit **59** a signal having passed through the associated bypass line, instead of a signal having passed through block **52**. When bypass enable signal **43** is being activated, selector circuit **57** outputs to selector circuit **59** a signal having passed through the associated bypass line, instead of a signal having passed through block **53**.

DQS delay circuit **25**A in FIG. **19** further includes an offset bypass control circuit **30**A instead of offset control circuit **30** in FIG. **6**. Offset bypass control circuit **30**A outputs the aforementioned bypass enable signal **43** as well as the offset setting value **14** described above, under control by memory controller **4**.

In the above-described configuration, when the offset setting value is 0 and bypass enable signal **43** is being activated, strobe signal DQS which has passed through the bypass line connected in parallel with block **50** is fed to delay amount adjustment circuit **27** located in the subsequent stage. When the offset setting value is 1 and bypass enable signal **43** is being activated, strobe signal DQS which has passed through the bypass lines connected in parallel with block **50** and block **51** is fed to delay amount adjustment circuit **27** located in the subsequent stage. Likewise, when the offset setting value is 2 and bypass enable signal **43** is being activated, strobe signal DQS having passed through the bypass lines connected in parallel with blocks **50**, **51**, and **52** is fed to delay amount adjustment circuit **27** located in the subsequent stage. When the offset setting value is 3 and bypass enable signal **43** is being activated, strobe signal DQS having passed through the bypass lines connected in parallel with blocks **50** to **52** and block **53** is fed to delay amount adjustment circuit **27** located in the subsequent stage.

FIG. **20** is a diagram showing, regarding DQS delay circuit **25**B in FIG. **19**, a relationship between the delay code and the delay amount of the whole delay circuit when the offset value is 0.

Referring to FIG. **20**, a description will be given of a case where a setup margin test is performed with a delay amount TG45 of 45 degrees, instead of delay amount TG90 of 90 degrees in the normal mode. In this case, the delay amount of each bypass line is set in advance so that the delay amount is approximately 45 degrees.

When the bypass enable signal is activated, the line representing the relationship between the delay amount and delay code **41** of DQS delay circuit **25**B shifts downward with its slope maintained. Accordingly the state of 45-degree delay can be generated which cannot be generated in the normal mode even when the delay code is set to a minimum value, and accordingly the setup margin test can be performed.

It should be construed that the embodiments disclosed herein are given by way of illustration in all respects, not by way of limitation. It is intended that the scope of the present invention is defined by claims, not by the description above, and encompasses all modifications and variations equivalent in meaning and scope to the claims.

REFERENCE SIGNS LIST

1 semiconductor device; **2** DRAM device; **4** memory controller; **4**A conversion table; **5** interface circuit; **7** clock generator; **14** offset setting value; **24** selector circuit; **25**, **25**A, **25**B DQS delay circuit; **26**, **26**A, **26**B offset adjustment circuit; **27** delay amount adjustment circuit; **28** data detection circuit; **30** offset control circuit; **30**A offset bypass control circuit; **31** calibration control circuit; **32** control module; **33** signal processing unit; **34** pulse generator; **35** phase comparator; **41** delay code; **43** bypass enable signal; **50** to **53**, **51**A to **53**A

block; **60** delay line; **59**, **61** selector circuit; CK system clock; DE delay element; DQ data signal; DQS strobe signal

The invention claimed is:

1. A semiconductor device comprising:

a clock generator generating a clock signal having a set frequency; and

an interface circuit supplying an operation clock to an external memory device based on said clock signal and receiving a data signal and a strobe signal from said memory device,

said interface circuit including:

a delay circuit delaying said received strobe signal; and

a data detection circuit sampling said data signal at a timing of an edge of said strobe signal having been delayed by said delay circuit, and

said delay circuit including:

a first adjustment circuit capable of adjusting a delay amount of said strobe signal in a plurality of steps in accordance with the set frequency of said clock signal; and

a second adjustment circuit connected in series with said first adjustment circuit and capable of adjusting the delay amount of said strobe signal with a higher precision than said first adjustment circuit, wherein

said first adjustment circuit includes:

a plurality of delay elements connected in series to each other; and

a selection circuit changing, in accordance with a given delay amount setting value, the number of delay elements through which said strobe signal passes before being output from said first adjustment circuit,

said semiconductor device further comprises:

a central processing unit setting the frequency of said clock signal; and

a control circuit receiving information regarding the set frequency of said clock signal and outputting said delay amount setting value to said selection circuit based on a predetermined correlation between said set frequency and said delay amount setting value, and

said correlation is determined so that the number of delay elements through which said strobe signal passes before being output from said first adjustment circuit is larger as said set frequency is lower.

2. The semiconductor device according to claim **1**, wherein

said second adjustment circuit includes a plurality of delay elements connected in series to each other,

said interface circuit has, as operation modes, a calibration mode of adjusting a delay amount of said delay circuit and a normal mode of delaying said strobe signal by the adjusted delay amount,

said interface circuit further includes a calibration control circuit adjusting a delay amount of said second adjustment circuit in said calibration mode, and

after a delay amount of said first adjustment circuit is set in accordance with said set frequency, said calibration control circuit determines the number of delay elements through which said strobe signal passes after being input to and before being output from said second adjustment circuit, so that the delay amount of said delay circuit as a whole is identical to a target delay determined in accordance with said clock signal.

3. The semiconductor device according to claim **2**, wherein

the plurality of delay elements provided in said first adjustment circuit are divided into M blocks from first to M-th blocks each including a plurality of delay elements,

in accordance with said delay amount setting value, said selection circuit outputs said strobe signal having passed through none of said M blocks or passed through i blocks from first to i-th blocks in order among said M blocks, where i is an integer of 1 or more and M or less, and

the number of delay elements included in each of said M blocks is different from block to block.

4. The semiconductor device according to claim **3**, wherein the number of delay elements included in a j-th block is larger than the number of delay elements included in a j+1-th block, where j is an integer of 1 or more and M−1 or less.

5. The semiconductor device according to claim **3**, wherein

a delay amount of each delay element provided in each of said first adjustment circuit and said second adjustment circuit varies depending on variation of manufacturing conditions, operation temperature, and operation voltage of said semiconductor device, and

a maximum value of the delay amount which can be set by said delay circuit as a whole when the strobe signal having passed through j blocks from first to j-th blocks is output from said first adjustment circuit and each delay element has an assumed minimum delay amount is equal to or larger than a minimum value of the delay amount which can be set by said delay circuit as a whole when the strobe signal having passed through j+1 blocks from first to j+l-th blocks is output from said first adjustment circuit and each delay element has an assumed maximum delay amount, where j is an integer of 1 or more and M−1 or less.

6. The semiconductor device according to claim **2**, wherein

said interface circuit further has a test mode as an operation mode,

said first adjustment circuit has one or more bypass lines,

each bypass line of said one or more bypass lines is connected in parallel with a part of the plurality of delay elements provided in said first adjustment circuit, and has a delay amount smaller than a delay amount of the part of the delay elements, as a whole, with which said bypass line is connected in parallel, and

in said test mode, said first adjustment circuit outputs said strobe signal having passed through the bypass line rather than through the part of the plurality of delay elements with which the bypass line is connected in parallel and through which said strobe signal passes in said normal mode.

* * * * *