UNITED STATES PATENT AND TRADEMARK OFFICE

UNITED STATES DEPARTMENT OF COMMERCE
United States Patent and Trademark Office
Address: COMMISSIONER FOR PATENTS
P.O. Box 1450
Alexandria, Virginia 22313-1450
www.uspto.gov

APPLICATION NUMBER	FILING OR 371(C) DATE	FIRST NAMED APPLICANT	ATTY. DOCKET NO./TITLE
18/411,476	01/12/2024	David Townley	NEURE-008/03US 35242/151

CONFIRMATION NO. 8746

21710
BROWN RUDNICK LLP
ONE FINANCIAL CENTER
BOSTON, MA 02111

PUBLICATION NOTICE

OC10000073917853

Date Mailed: 06/13/2024

Title:SYSTEMS AND METHODS FOR IMPROVING SLEEP WITH THERAPEUTIC NASAL TREATMENT

Publication No.US-2024-0189019-A1
Publication Date:06/13/2024

NOTICE OF PUBLICATION OF APPLICATION

The above-identified application will be electronically published as a patent application publication pursuant to 37 CFR 1.211, et seq. The patent application publication number and publication date are set forth above.

The publication may be viewed using the USPTO's publicly available Searchable Databases via the Patent Public Search tool at www.uspto.gov. The direct link to access the Patent Public Search tool is currently https://ppubs.uspto.gov/pubwebapp/static/pages/ppubsbasic.html.

The publication process established by the Office does not provide for mailing a copy of the publication to applicant. A copy of the publication may be obtained from the Office upon payment of the appropriate fee set forth in 37 CFR 1.19(a)(1). Orders for copies of patent application publications are handled by the USPTO's Public Records Division. The Public Records Division can be reached by telephone at (571) 272-3150 or (800) 972-6382, by facsimile at (571) 273-3250, by mail addressed to the United States Patent and Trademark Office, Public Records Division, Alexandria, VA 22313-1450 or via the Internet.

In addition, information on the status of the application, including the mailing date of Office actions and the dates of receipt of correspondence filed in the Office, may also be accessed via the Internet through Patent Center, the USPTO's electronic patent application filing and management system. The direct link to access this status information is currently https://patentcenter.uspto.gov/. Prior to publication, such status information is confidential and may only be obtained by applicant using the private side of Patent Center.

Further assistance in electronically accessing the publication, or about Patent Center, is available by calling the Patent Electronic Business Center at 1-866-217-9197.

Office of Data Managment, Application Assistance Unit (571) 272-4000, or (571) 272-4200, or 1-888-786-0101

UNITED STATES PATENT AND TRADEMARK OFFICE

UNITED STATES DEPARTMENT OF COMMERCE
United States Patent and Trademark Office
Address: COMMISSIONER FOR PATENTS
P.O. Box 1450
Alexandria, Virginia 22313-1450
www.uspto.gov

APPLICATION NO.	FILING DATE	FIRST NAMED INVENTOR	ATTORNEY DOCKET NO.	CONFIRMATION NO.
18/411,476	01/12/2024	David Townley	NEURE-008/03US 35242/151	8746

21710 7590 06/04/2024

BROWN RUDNICK LLP
ONE FINANCIAL CENTER
BOSTON, MA 02111

EXAMINER	
BOCK, ABIGAIL MARIE	

ART UNIT	PAPER NUMBER
3794	

NOTIFICATION DATE	DELIVERY MODE
06/04/2024	ELECTRONIC

Please find below and/or attached an Office communication concerning this application or proceeding.

The time period for reply, if any, is set in the attached communication.

Notice of the Office communication was sent electronically on above-indicated "Notification Date" to the following e-mail address(es):

ip@brownrudnick.com
usactions@brownrudnick.com

APPLICATION NO.	ISSUE DATE	PATENT NO.
18/411,476	04-Jun-2024	11998262

BROWN RUDNICK LLP
ONE FINANCIAL CENTER
BOSTON, MA 02111

EGRANT NOTIFICATION

Your electronic patent grant (eGrant) is now available, which can be accessed via Patent Center at https://patentcenter.uspto.gov

The electronic patent grant is the official patent grant under 35 U.S.C. 153. For more information, please visit https://www.uspto.gov/electronicgrants

Aerin Exhibit 1011, Page 3 of 2183
Aerin Medical Inc. v. Neurent Medical Ltd.
IPR2025-01126

UNITED STATES PATENT AND TRADEMARK OFFICE

UNITED STATES DEPARTMENT OF COMMERCE
United States Patent and Trademark Office
Address: COMMISSIONER FOR PATENTS
P.O. Box 1450
Alexandria, Virginia 22313-1450
www.uspto.gov

APPLICATION NO.	ISSUE DATE	PATENT NO.	ATTORNEY DOCKET NO.	CONFIRMATION NO.
18/411,476	06/04/2024	11998262	NEURE-008/03US 35242/151	8746

21710 7590 05/15/2024

BROWN RUDNICK LLP
ONE FINANCIAL CENTER
BOSTON, MA 02111

ISSUE NOTIFICATION

The projected patent number and issue date are specified above. The patent will issue electronically. The electronically issued patent is the official patent grant pursuant to 35 U.S.C. § 153. The patent may be accessed on or after the issue date through Patent Center at https://patentcenter.uspto.gov/. The patent will be available in both the public and the private sides of Patent Center. Further assistance in electronically accessing the patent, or about Patent Center, is available by calling the Patent Electronic Business Center at 1-888-217-9197.

The USPTO is implementing electronic patent issuance with a transition period, during which period the USPTO will mail a ceremonial paper copy of the electronic patent grant to the correspondence address of record. Additional copies of the patent (i.e., certified and presentation copies) may be ordered for a fee from the USPTO's Certified Copy Center at https://certifiedcopycenter.uspto.gov/index.html. The Certified Copy Center may be reached at (800)972-6382.

Determination of Patent Term Adjustment under 35 U.S.C. 154 (b)
(application filed on or after May 29, 2000)

The Patent Term Adjustment is 0 day(s). Any patent to issue from the above-identified application will include an indication of the adjustment on the front page.

If a Continued Prosecution Application (CPA) was filed in the above-identified application, the filing date that determines Patent Term Adjustment is the filing date of the most recent CPA.

Applicant will be able to obtain more detailed information by accessing the Patent Center (https://patentcenter.uspto.gov).

Any questions regarding the Patent Term Extension or Adjustment determination should be directed to the Office of Patent Legal Administration at (571)-272-7702. Questions relating to issue and publication fee payments should be directed to the Application Assistance Unit (AAU) of the Office of Patents Stakeholder Experience (OPSE), Stakeholder Support Division (SSD) at (571)-272-4200.

INVENTOR(s) (Please see PATENT CENTER site https://patentcenter.uspto.gov for additional inventors):

David Townley, County Clare, IRELAND;

APPLICANT(s) (Please see PATENT CENTER site https://patentcenter.uspto.gov for additional applicants):

Neurent Medical Limited, Oranmore, IRELAND;

The United States represents the largest, most dynamic marketplace in the world and is an unparalleled location for business investment, innovation, and commercialization of new technologies. The USA offers tremendous resources and advantages for those who invest and manufacture goods here. Through SelectUSA, our nation works to encourage and facilitate business investment. To learn more about why the USA is the best country in the world to develop technology, manufacture products, and grow your business, visit SelectUSA.gov.

INFORMATION DISCLOSURE STATEMENT BY APPLICANT (Not for submission under 37 CFR 1.99)		
	Application Number	18411476
	Filing Date	2024-01-12
	First Named Inventor	David Townley
	Art Unit	N/A
	Examiner Name	Not Yet Assigned
	Attorney Docket Number	NEURE-008/03US 35242/151

	50	20120078377	A1	2012-03-29	Gonzales et al.	
	51	20120191003		2012-07-26	Robert Garabedian	
	52	20120259326	A1	2012-10-11	Brannan et al.	
	53	20120323214	A1	2012-12-20	Shantha	
	54	20120323227	A1	2012-12-20	Wolf et al.	
	55	20120323232	A1	2012-12-20	Wolf et al.	
	56	20130018367	A1	2013-01-17	Wu et al.	
	57	20130123778	A1	2013-05-16	RICHARDSON et al.	
	58	20130158475	A1	2013-06-20	Xia et al.	
	59	20130165916	A1	2013-06-27	MATHUR et al.	
Change(s) applied to document; /C.C.B./ 4/26/2024	60	20130172877		2013-07-04	~~Boston Scientific Scimed, Inc.~~	Subramaniam et al.

EFS Web 2.1.18

ALL REFERENCES CONSIDERED EXCEPT WHERE LINED THROUGH. /A.M.B./

UNITED STATES PATENT AND TRADEMARK OFFICE

UNITED STATES DEPARTMENT OF COMMERCE
United States Patent and Trademark Office
Address: COMMISSIONER FOR PATENTS
P.O. Box 1450
Alexandria, Virginia 22313-1450
www.uspto.gov

APPLICATION NO.	FILING DATE	FIRST NAMED INVENTOR	ATTORNEY DOCKET NO.	CONFIRMATION NO.
18/411,476	01/12/2024	David Townley	NEURE-008/03US 35242/151	8746

21710 7590 04/30/2024

BROWN RUDNICK LLP
ONE FINANCIAL CENTER
BOSTON, MA 02111

EXAMINER	
BOCK, ABIGAIL MARIE	

ART UNIT	PAPER NUMBER
3794	

NOTIFICATION DATE	DELIVERY MODE
04/30/2024	ELECTRONIC

Please find below and/or attached an Office communication concerning this application or proceeding.

The time period for reply, if any, is set in the attached communication.

Notice of the Office communication was sent electronically on above-indicated "Notification Date" to the following e-mail address(es):

ip@brownrudnick.com
usactions@brownrudnick.com

UNITED STATES PATENT AND TRADEMARK OFFICE

Commissioner for Patents
United States Patent and Trademark Office
P.O. Box 1450
Alexandria, VA 22313-1450
www.uspto.gov

Application No. : 18411476
Applicant : Townley
Filing Date : 01/12/2024
Date Mailed : 04/30/2024

NOTICE TO FILE CORRECTED APPLICATION PAPERS

Notice of Allowance Mailed

This application has been accorded an Allowance Date and is being prepared for issuance. The application, however, is incomplete for the reasons below.

Applicant is given two (2) months from the mail date of this Notice within which to respond. This time period for reply is extendable under 37 CFR 1.136(a) for only TWO additional MONTHS.

The informalities requiring correction are indicated in the attachment(s). If the informality pertains to the abstract, specification (including claims) or drawings, the informality must be corrected with an amendment in compliance with 37 CFR 1.121 (or, if the application is a reissue application, 37 CFR 1.173). Such an amendment may be filed after payment of the issue fee if limited to correction of informalities noted herein. See Waiver of 37 CFR 1.312 for Documents Required by the Office of Patent Publication, 1280 Off. Gaz. Patent Office 918 (March 23, 2004). In addition, if the informality is not corrected until after payment of the issue fee, for purposes of 35 U.S.C. 154(b)(1)(iv), "all outstanding requirements" will be considered to have been satisfied when the informality has been corrected. A failure to respond within the above-identified time period will result in the application being ABANDONED.

See attachment(s).

A copy of this notice MUST be returned with the reply. Please address response to "Mail Stop Issue Fee, Commissioner for Patents, P.O. Box 1450, Alexandria, VA 22313-1450".

/Daxa Patel/
Publication Branch
Office of Data Management
(571) 272-4200

Application No. 18411476 **Drawings filed: 01/12/2024**

IDENTIFICATION OF DRAWING DEFICIENCIES

- [ ] There is a hole or the image thereof within the illustration. FIG(s)
- [ ] The illustration is penetrated or traversed by a solid or broken line that is not intended to be part of the drawing, such as a dark line caused by a flaw in the copying process. FIG(s)
- [ ] An ink stamp or the image thereof obscures part of the illustration. FIG(s)
- [ ] The drawing is marred by black smudges, obliterations, or fax/copier marks (for example, speckles or dots in a substantial portion of the drawing). FIG(s)
- [ ] Figure numbers are duplicated or missing. FIG(s)
- [ ] Drawing sheet or figure is missing. FIG(s)
- [ ] Numbers, letters, or reference characters in the drawing have been crossed out or are illegibly handwritten. FIG(s)
- [ ] The character of the lines, numbers, and letters is poor. FIG(s)
- [ ] The drawing's background shows that the original drawing was made on graph paper or other paper with a pattern or decoration. FIG(s)
- [ ] The FIG. number label is placed in a location that causes the drawing to be read upside down. FIG(s)
- [X] Data, a reference number, or part of the drawing is truncated or missing, or a lead line has no reference number. FIG(s) 12
- [ ] The drawing and/or the FIG. label contain(s) foreign language. FIG(s)
- [ ] This utility application contains a photograph of a view that is capable of being illustrated as a line drawing. FIG(s)
- [ ] A petition under 37 CFR 1.84(a)(2) to accept color drawings has been granted, but the brief description of the drawings in the specification does not contain (or has not been amended to contain) the paragraph required by 37 CFR 1.84(a)(2)(iii).
- [ ] This reissue application contains added and/or amended drawings that are not labeled as “New” or “Amended” or “Canceled” as required by 37 CFR 1.173(b)(3). FIG(s)
- [ ] This Design reissue application contains a drawing that is labeled as “Canceled” but is not surrounded by brackets, or a drawing that is surrounded by brackets but is not labeled as “Canceled.” See 37 CFR 1.173(b)(3). FIG(s)
- [ ] OTHER:
- [ ] COMMENTS:

UNITED STATES
PATENT AND TRADEMARK OFFICE

P.O. Box 1450
Alexandria, VA 22313 - 1450
www.uspto.gov

ELECTRONIC ACKNOWLEDGEMENT RECEIPT

APPLICATION #	RECEIPT DATE / TIME	ATTORNEY DOCKET #
18/411,476	**04/30/2024 04:42:21 PM Z ET**	**NEURE-008/03US 35242/151**

Title of Invention

SYSTEMS AND METHODS FOR IMPROVING SLEEP WITH THERAPEUTIC NASAL TREATMENT

Application Information

APPLICATION TYPE	Utility - Nonprovisional Application under 35 USC 111(a)	PATENT #	-
CONFIRMATION #	8746	FILED BY	Michelle Aiello
PATENT CENTER #	65315444	FILING DATE	01/12/2024
CUSTOMER #	21710	FIRST NAMED INVENTOR	David Townley
CORRESPONDENCE ADDRESS	-	AUTHORIZED BY	Matthew York

Documents

TOTAL DOCUMENTS: 5

DOCUMENT		PAGES	DESCRIPTION	SIZE (KB)
NEURE-008-03US_Response_to_NTFCAP.pdf		3	-	84 KB
NEURE-008-03US_Response_to_NTFCAP-A.NA.pdf	(1-1)	1	Amendment after Notice of Allowance (Rule 312)	78 KB
NEURE-008-03US_Response_to_NTFCAP-DRW.pdf	(2-2)	1	Drawings-only black and white line drawings	77 KB
NEURE-008-03US_Response_to_NTFCAP-REM.pdf	(3-3)	1	Applicant Arguments/Remarks Made in an Amendment	78 KB

NEURE-008-03US_Replacement_Drawing.pdf	1	Drawings-only black and white line drawings	466 KB
NEURE-008-03US_Notice.pdf	3	Miscellaneous Incoming Letter	108 KB

Digest

DOCUMENT	MESSAGE DIGEST(SHA-512)
NEURE-008-03US_Response_to_NTFCAP.pdf	48A9F5C66BB473F7912872AED1CC9B9B78205EF01452E7299CF4CC27A4CAE8AE6AA66BCFD77078A570BA2DCB31B9498CBCBB8E66B329BCBDC419FDDC81DACBD5
NEURE-008-03US_Response_to_NTFCAP-A.NA.pdf	F5A1F01C185456E8AD1B1168266BE01DD7A1632EE049874D69A14E2E61EA6F367F5207CFB7FBB223FE2A661E66346FCBA083E11543613A4273B1A3D11095BA5F
NEURE-008-03US_Response_to_NTFCAP-DRW.pdf	4A8250F582F3206DC832B7A4AE7C9A910C99D5AED79C4DCF2CAF278F265A359F10AE5B0057AB4281EC41B5519C29F21775E4FBA1DCB167DD7DA1BFD15BDDB24A
NEURE-008-03US_Response_to_NTFCAP-REM.pdf	266262BC480A488D598BDD06C039DF044D74B4D47C8D74AD10584177B080E2580F8CD82C287281B2860359FC103E338442AED2096F883B16D9BAFBC4598A6379
NEURE-008-03US_Replacement_Drawing.pdf	92140527CB77E07425CE83099979BFEEDA8DB65A6EB5C8609AF742F8FDA6D72C01427B27F51F36314DE0C417D8D9555853EDDEA72E707F86B1F620EDBCA73563
NEURE-008-03US_Notice.pdf	580493EE6BBA6B858BC140752251E0FECE84EF5A48BEB5F39924D6C26E5879752511A25CC325CD32E3B6EF23AF0F67E863F930981064B09B0E7C597C132029A1

This Acknowledgement Receipt evidences receipt on the noted date by the USPTO of the indicated documents, characterized by the applicant, and including page counts, where applicable. It serves as evidence of receipt similar to a Post Card, as described in MPEP 503.

New Applications Under 35 U.S.C. 111

If a new application is being filed and the application includes the necessary components for filing date (see 37 CFR 1.53(b)-(d) and MPEP 506), a Filing Receipt (37 CFR 1.54) will be issued in due course and the date shown on this Acknowledgement Receipt will establish the filing date of the application

National Stage of an International Application under 35 U.S.C. 371

If a timely submission to enter the national stage of an international application is compliant with the conditions of 35 U.S.C. 371 and other applicable requirements a Form PCT/DO/EO/903 indicating acceptance of the application as a national stage submission under 35 U.S.C. 371 will be issued in addition to the Filing Receipt, in due course.

New International Application Filed with the USPTO as a Receiving Office

If a new international application is being filed and the international application includes the necessary components for an international filing date (see PCT Article 11 and MPEP 1810), a Notification of the International Application Number and of the International Filing Date (Form PCT/RO/105) will be issued in due course, subject to prescriptions concerning national security, and the date shown on this Acknowledgement Receipt will establish the international filing date of the application.

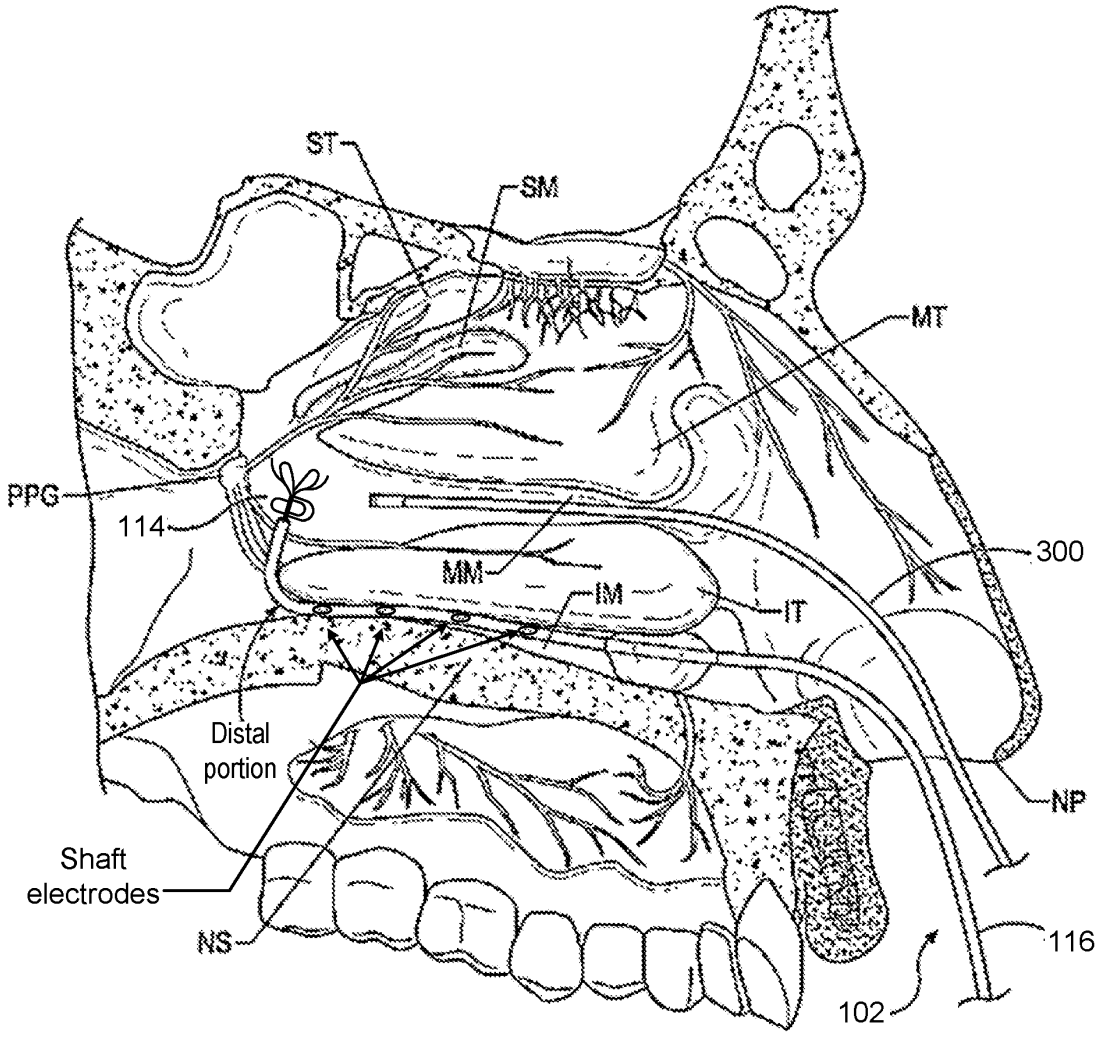
ST
SM
MT
PPG
114
300
MM
IM
IT
Distal
portion
NP
Shaft
electrodes
NS
116
102

FIG. 12

IN THE UNITED STATES PATENT AND TRADEMARK OFFICE

APPLICANT:	Neurent Medical Limited	ART UNIT:	3794
SERIAL NUMBER:	18/411,476	CONF. NO.:	8746
FILING DATE:	January 12, 2024	EXAMINER:	Abigail Marie Bock
TITLE:	SYSTEMS AND METHODS FOR IMPROVING SLEEP WITH THERAPEUTIC NASAL TREATMENT		

FILED ELECTRONICALLY

Mail Stop Issue Fee
Commissioner for Patents
P. O. Box 1450
Alexandria, VA 22313-1450

RESPONSE TO NOTICE TO FILE CORRECTED APPLICATION PAPERS

This paper is in response to a Notice to File Corrected Application Papers mailed April 30, 2024. A copy of the Notice is submitted herewith.

Applicant believes that no fees are due with this response but authorizes the Office to charge any other required fees due to Deposit Account 500369 to make this response timely and have it considered.

Amendments to the Drawings begin on page 2.

Remarks begin on page 3.

Amendments to the Drawings:

Applicant submits herewith one (1) sheet of replacement drawings, which includes changes to figures therein, and hereby replaces original sheet 18. In particular, FIG 12 has been revised to be in compliance with 37 CFR 1.84. More specifically, FIG. 12 has been revised to remove a lead line with no reference number per 37 CFR 1.84(p)(1) and 37 CFR 1.84(q).

Attachment: 1 Replacement Sheet

Aerin Exhibit 1011, Page 15 of 2183
Aerin Medical Inc. v. Neurent Medical Ltd.
IPR2025-01126

REMARKS

In response to the Notice to File Corrected Application Papers dated April 30, 2024, Applicant submits herewith replacement drawings. No new matter is included in the replacement drawings.

In the Notice, FIG. 12 is objected because a lead line has no reference number.

Applicant submits herewith one sheet of replacement drawings, which includes changes to figures therein, and hereby replaces original sheet 18. In particular, FIG. 12 has been revised to remove a lead line with no reference number per 37 CFR 1.84(p)(1) and 37 CFR 1.84(q).

Summary

If there are any questions regarding these remarks, the Examiners are invited and encouraged to contact Applicant's undersigned representative.

Dated: April 30, 2024

Respectfully submitted,
BROWN RUDNICK LLP

BROWN RUDNICK LLP
One Financial Center
Boston, MA 02111
Tel: (617) 856-8200
Fax: (617) 856-8201

/Matthew P. York/
Matthew P. York, Reg. No. 66,470
Attorney for Applicant
Email: myork@brownrudnick.com

65348514 v1

Aerin Exhibit 1011, Page 16 of 2183
Aerin Medical Inc. v. Neurent Medical Ltd.
IPR2025-01126

UNITED STATES PATENT AND TRADEMARK OFFICE

UNITED STATES DEPARTMENT OF COMMERCE
United States Patent and Trademark Office
Address: COMMISSIONER FOR PATENTS
P.O. Box 1450
Alexandria, Virginia 22313-1450
www.uspto.gov

APPLICATION NO.	FILING DATE	FIRST NAMED INVENTOR	ATTORNEY DOCKET NO.	CONFIRMATION NO.
18/411,476	01/12/2024	David Townley	NEURE-008/03US 35242/151	8746

21710 7590 04/30/2024

BROWN RUDNICK LLP
ONE FINANCIAL CENTER
BOSTON, MA 02111

EXAMINER	
BOCK, ABIGAIL MARIE	

ART UNIT	PAPER NUMBER
3794	

NOTIFICATION DATE	DELIVERY MODE
04/30/2024	ELECTRONIC

Please find below and/or attached an Office communication concerning this application or proceeding.

The time period for reply, if any, is set in the attached communication.

Notice of the Office communication was sent electronically on above-indicated "Notification Date" to the following e-mail address(es):

ip@brownrudnick.com
usactions@brownrudnick.com

UNITED STATES PATENT AND TRADEMARK OFFICE

Commissioner for Patents
United States Patent and Trademark Office
P.O. Box 1450
Alexandria, VA 22313-1450
www.uspto.gov

Application No. : 18411476
Applicant : Townley
Filing Date : 01/12/2024
Date Mailed : 04/30/2024

NOTICE TO FILE CORRECTED APPLICATION PAPERS

Notice of Allowance Mailed

This application has been accorded an Allowance Date and is being prepared for issuance. The application, however, is incomplete for the reasons below.

Applicant is given two (2) months from the mail date of this Notice within which to respond. This time period for reply is extendable under 37 CFR 1.136(a) for only TWO additional MONTHS.

The informalities requiring correction are indicated in the attachment(s). If the informality pertains to the abstract, specification (including claims) or drawings, the informality must be corrected with an amendment in compliance with 37 CFR 1.121 (or, if the application is a reissue application, 37 CFR 1.173). Such an amendment may be filed after payment of the issue fee if limited to correction of informalities noted herein. See Waiver of 37 CFR 1.312 for Documents Required by the Office of Patent Publication, 1280 Off. Gaz. Patent Office 918 (March 23, 2004). In addition, if the informality is not corrected until after payment of the issue fee, for purposes of 35 U.S.C. 154(b)(1)(iv), "all outstanding requirements" will be considered to have been satisfied when the informality has been corrected. A failure to respond within the above-identified time period will result in the application being ABANDONED.

See attachment(s).

A copy of this notice MUST be returned with the reply. Please address response to "Mail Stop Issue Fee, Commissioner for Patents, P.O. Box 1450, Alexandria, VA 22313-1450".

/Daxa Patel/
Publication Branch
Office of Data Management
(571) 272-4200

Application No. 18411476 **Drawings filed: 01/12/2024**

IDENTIFICATION OF DRAWING DEFICIENCIES

- [ ] There is a hole or the image thereof within the illustration. FIG(s)
- [ ] The illustration is penetrated or traversed by a solid or broken line that is not intended to be part of the drawing, such as a dark line caused by a flaw in the copying process. FIG(s)
- [ ] An ink stamp or the image thereof obscures part of the illustration. FIG(s)
- [ ] The drawing is marred by black smudges, obliterations, or fax/copier marks (for example, speckles or dots in a substantial portion of the drawing). FIG(s)
- [ ] Figure numbers are duplicated or missing. FIG(s)
- [ ] Drawing sheet or figure is missing. FIG(s)
- [ ] Numbers, letters, or reference characters in the drawing have been crossed out or are illegibly handwritten. FIG(s)
- [ ] The character of the lines, numbers, and letters is poor. FIG(s)
- [ ] The drawing's background shows that the original drawing was made on graph paper or other paper with a pattern or decoration. FIG(s)
- [ ] The FIG. number label is placed in a location that causes the drawing to be read upside down. FIG(s)
- [X] Data, a reference number, or part of the drawing is truncated or missing, or a lead line has no reference number. FIG(s) 12
- [ ] The drawing and/or the FIG. label contain(s) foreign language. FIG(s)
- [ ] This utility application contains a photograph of a view that is capable of being illustrated as a line drawing. FIG(s)
- [ ] A petition under 37 CFR 1.84(a)(2) to accept color drawings has been granted, but the brief description of the drawings in the specification does not contain (or has not been amended to contain) the paragraph required by 37 CFR 1.84(a)(2)(iii).
- [ ] This reissue application contains added and/or amended drawings that are not labeled as “New” or “Amended” or “Canceled” as required by 37 CFR 1.173(b)(3). FIG(s)
- [ ] This Design reissue application contains a drawing that is labeled as “Canceled” but is not surrounded by brackets, or a drawing that is surrounded by brackets but is not labeled as “Canceled.” See 37 CFR 1.173(b)(3). FIG(s)
- [ ] OTHER:
- [ ] COMMENTS:

DocCode - SCORE

Placeholder Sheet for Supplemental Content

Application Number: 18411476 Document Date: 04/30/2024

The presence of this form indicates that the following document type was received in electronic format on the date identified above. This document is stored separately from the typical case contents which are stored in image format.

Since this was an electronic submission, there is no physical artifact folder, no artifact folder is recorded and no paper documents or physical media exist.

- Drawing

At the time of document entry (noted above):

- USPTO employees may access this supplemental content via Docket Application Viewer (DAV) or Supplemental Content Viewer (SCV).
- External customers may access this supplemental content via Patent Center.

Form Revision Date: March 1, 2024

UNITED STATES
PATENT AND TRADEMARK OFFICE

P.O. Box 1450
Alexandria, VA 22313 - 1450
www.uspto.gov

ELECTRONIC PAYMENT RECEIPT

APPLICATION #	RECEIPT DATE / TIME	ATTORNEY DOCKET #
18/411,476	04/23/2024 02:16:24 PM Z ET	NEURE-008/03US 35242/151

Title of Invention

SYSTEMS AND METHODS FOR IMPROVING SLEEP WITH THERAPEUTIC NASAL TREATMENT

Application Information

APPLICATION TYPE	Utility - Nonprovisional Application under 35 USC 111(a)	PATENT #	-
CONFIRMATION #	8746	FILED BY	Michelle Aiello
PATENT CENTER #	65206871	AUTHORIZED BY	Adam Schoen
CUSTOMER #	21710	FILING DATE	01/12/2024
CORRESPONDENCE ADDRESS	-	FIRST NAMED INVENTOR	David Townley

Payment Information

PAYMENT METHOD	PAYMENT TRANSACTION ID	PAYMENT AUTHORIZED BY
DA / 500369	E20244ME17315400	Michelle Aiello

FEE CODE	DESCRIPTION	ITEM PRICE($)	QUANTITY	ITEM TOTAL($)
2501	UTILITY ISSUE FEE	480.00	1	480.00
			TOTAL AMOUNT:	$480.00

This Acknowledgement Receipt evidences receipt on the noted date by the USPTO of the indicated documents, characterized by the applicant, and including page counts, where applicable. It serves as evidence of receipt similar to a Post Card, as described in MPEP 503.

New Applications Under 35 U.S.C. 111

If a new application is being filed and the application includes the necessary components for filing date (see 37 CFR 1.53(b)-(d) and MPEP 506), a Filing Receipt (37 CFR 1.54) will be issued in due course and the date shown on this Acknowledgement Receipt will establish the filing date of the application

National Stage of an International Application under 35 U.S.C. 371

If a timely submission to enter the national stage of an international application is compliant with the conditions of 35 U.S.C. 371 and other applicable requirements a Form PCT/DO/EO/903 indicating acceptance of the application as a national stage

submission under 35 U.S.C. 371 will be issued in addition to the Filing Receipt, in due course.

New International Application Filed with the USPTO as a Receiving Office

If a new international application is being filed and the international application includes the necessary components for an international filing date (see PCT Article 11 and MPEP 1810), a Notification of the International Application Number and of the International Filing Date (Form PCT/RO/105) will be issued in due course, subject to prescriptions concerning national security, and the date shown on this Acknowledgement Receipt will establish the international filing date of the application.

PART B–FEE(S) TRANSMITTAL

Complete and send this form, together with the applicable fee(s), by mail or fax, or via the USPTO patent electronic filing system.

By mail, send to: Mail Stop ISSUE FEE
Commissioner for Patents
P.O. Box 1450
Alexandria, VA 22313-1450

By fax, send to: (571) 273-2885

INSTRUCTIONS: This form should be used for transmitting the ISSUE FEE and PUBLICATION FEE (if required). Blocks 1 through 5 should be completed where appropriate. All further correspondence will be mailed to the current correspondence address as indicated unless corrected below or directed otherwise in Block 1, by (a) specifying a new correspondence address; and/or (b) indicating a separate "FEE ADDRESS" for maintenance fee notifications. **Because electronic patent issuance may occur shortly after issue fee payment, any desired continuing application should preferably be filed prior to payment of this issue fee in order not to jeopardize copendency.**

CURRENT CORRESPONDENCE ADDRESS (Note: Use Block 1 for any change of address)

Brown Rudnick LLP
One Financial Center
Boston, Massachusetts 02111

Note: A certificate of mailing can only be used for domestic mailings of the Fee(s) Transmittal. This certificate cannot be used for any other accompanying papers. Each additional paper, such as an assignment or formal drawing, must have its own certificate of mailing or transmission.

Certificate of Mailing or Transmission

I hereby certify that this Fee(s) Transmittal is being deposited with the United States Postal Service with sufficient postage for first class mail in an envelope addressed to the Mail Stop ISSUE FEE address above, or being transmitted to the USPTO via the USPTO patent electronic filing system or by facsimile to (571) 273-2885, on the date below.

Michelle Aiello	(Typed or printed name)
/Michelle Aiello/	(Signature)
April 23, 2024	(Date)

APPLICATION NO	FILING DATE	FIRST NAMED INVENTOR	ATTORNEY DOCKET NO	CONFIRMATION NO
18/411,476	01/12/2024	David Townley	NEURE-008/03US 35242/151	8746

TITLE OF INVENTION: SYSTEMS AND METHODS FOR IMPROVING SLEEP WITH THERAPEUTIC NASAL TREATMENT

APPLN: TYPE	ENTITY STATUS	ISSUE FEE DUE	PUBLICATION FEE DUE	PREV. PAID ISSUE FEE	TOTAL FEE(S) DUE	DATE DUE
nonprovisional	SMALL	$480.00	$0.00	$0.00	$480.00	07/22/2024

EXAMINER	ART UNIT	CLASS-SUBCLASS
Bock, Abigail Marie	3794	606-041000

1. Change of correspondence address or indication of "Fee Address" (37 CFR 1.363)

☐ Change of correspondence address (or Change of Correspondence Address form PTO/SB/122) attached.

☐ "Fee Address" indication (or "Fee Address" Indication form PTO/AIA/47 or PTO/SB/47; Rev 03-09 or more recent) attached. **Use of a Customer Number is required.**

2. For printing on the patent front page, list

(1) The names of up to 3 registered patent attorneys or agents OR, alternatively,

(2) The name of a single firm (having as a member a registered attorney or agent) and the names of up to 2 registered patent attorneys or agents. If no name is listed, no name will be printed.

1. Brown Rudnick LLP
2. Adam M. Schoen
3.

3. ASSIGNEE NAME AND RESIDENCE DATA TO BE PRINTED ON THE PATENT (print or type)

PLEASE NOTE: Unless an assignee is identified below, no assignee data will appear on the patent. If an assignee is identified below, the document must have been previously recorded, or filed for recordation, as set forth in 37 CFR 3.11 and 37 CFR 3.81(a). Completion of this form is NOT a substitute for filing an assignment.

(A) NAME OF ASSIGNEE	(B) RESIDENCE: (CITY and STATE or COUNTRY)
Neurent Medical Limited	Oranmore, Galway, Ireland

Please check the appropriate assignee category or categories (will not be printed on the patent): ☐ Individual ☒ Corporation or other private group entity ☐ Government

4a. Fees Submitted: ☒ Issue Fee ☐ Publication Fee (if required)

4b. Method of Payment (*Please first reapply any previously paid fee shown above*):

☒ Electronic Payment via the USPTO patent electronic filing system ☐ Enclosed check ☐ Non-electronic payment by credit card (Attach form PTO-2038)

☒ The Director is hereby authorized to charge the required fee(s), any deficiency, or credit any overpayment to Deposit Account No. 50-0369

5. Change of Entity Status (from status indicated above)

☐ Applicant certifying micro entity status. See 37 CFR 1.29. NOTE: Absent a valid Certification of Micro Entity Status (see forms PTO/SB/15A and 15B), issue fee payment in the micro entity amount will not be accepted at the risk of application abandonment.

☐ Applicant asserting small entity status. See 37 CFR 1.27. NOTE: If the application was previously under micro entity status, checking this box will be taken as a notification of loss of entitlement to micro entity status.

☐ Applicant changing to regular undiscounted fee status. NOTE: Checking this box will be taken as a notification of loss of entitlement to small or micro entity status, as applicable.

NOTE: This form must be signed in accordance with 37 CFR 1.31 and 1.33. See 37 CFR 1.4 for signature requirements and certifications.

Authorized Signature	/Adam M. Schoen/	Date	April 23, 2024
Typed or printed name	Adam M. Schoen	Registration No.	58,576

Aerin Exhibit 1011, Page 23 of 2183
Aerin Medical Inc. v. Neurent Medical Ltd.
IPR2025-01126

UNITED STATES
PATENT AND TRADEMARK OFFICE

P.O. Box 1450
Alexandria, VA 22313 - 1450
www.uspto.gov

ELECTRONIC ACKNOWLEDGEMENT RECEIPT

APPLICATION #	RECEIPT DATE / TIME	ATTORNEY DOCKET #
18/411,476	**04/23/2024 02:16:24 PM Z ET**	**NEURE-008/03US 35242/151**

Title of Invention

SYSTEMS AND METHODS FOR IMPROVING SLEEP WITH THERAPEUTIC NASAL TREATMENT

Application Information

APPLICATION TYPE	Utility - Nonprovisional Application under 35 USC 111(a)	PATENT #	-
CONFIRMATION #	8746	FILED BY	Michelle Aiello
PATENT CENTER #	65206871	FILING DATE	01/12/2024
CUSTOMER #	21710	FIRST NAMED INVENTOR	David Townley
CORRESPONDENCE ADDRESS	-	AUTHORIZED BY	Adam Schoen

Documents

TOTAL DOCUMENTS: 1

DOCUMENT	PAGES	DESCRIPTION	SIZE (KB)
NEURE-008-03US-Issue_Fee_Transmittal.pdf	1	Issue Fee Payment (PTO-85B)	139 KB

Digest

DOCUMENT	MESSAGE DIGEST(SHA-512)
NEURE-008-03US-Issue_Fee_Transmittal.pdf	A73531D1BA53DC501FF2291B0941E9FC3C707CCBEAD6AB21E82A6198F3174B57B08AB2CEF868937B785160A3BBF4408ED47AFC2A748BFEC2F95F40DDCE80053F

This Acknowledgement Receipt evidences receipt on the noted date by the USPTO of the indicated documents, characterized

by the applicant, and including page counts, where applicable. It serves as evidence of receipt similar to a Post Card, as described in MPEP 503.

New Applications Under 35 U.S.C. 111

If a new application is being filed and the application includes the necessary components for filing date (see 37 CFR 1.53(b)-(d) and MPEP 506), a Filing Receipt (37 CFR 1.54) will be issued in due course and the date shown on this Acknowledgement Receipt will establish the filing date of the application

National Stage of an International Application under 35 U.S.C. 371

If a timely submission to enter the national stage of an international application is compliant with the conditions of 35 U.S.C. 371 and other applicable requirements a Form PCT/DO/EO/903 indicating acceptance of the application as a national stage submission under 35 U.S.C. 371 will be issued in addition to the Filing Receipt, in due course.

New International Application Filed with the USPTO as a Receiving Office

If a new international application is being filed and the international application includes the necessary components for an international filing date (see PCT Article 11 and MPEP 1810), a Notification of the International Application Number and of the International Filing Date (Form PCT/RO/105) will be issued in due course, subject to prescriptions concerning national security, and the date shown on this Acknowledgement Receipt will establish the international filing date of the application.

UNITED STATES PATENT AND TRADEMARK OFFICE

UNITED STATES DEPARTMENT OF COMMERCE
United States Patent and Trademark Office
Address: COMMISSIONER FOR PATENTS
P.O. Box 1450
Alexandria, Virginia 22313-1450
www.uspto.gov

NOTICE OF ALLOWANCE AND FEE(S) DUE

21710 7590 04/22/2024

BROWN RUDNICK LLP
ONE FINANCIAL CENTER
BOSTON, MA 02111

EXAMINER	
BOCK, ABIGAIL MARIE	
ART UNIT	PAPER NUMBER
3794	

DATE MAILED: 04/22/2024

APPLICATION NO.	FILING DATE	FIRST NAMED INVENTOR	ATTORNEY DOCKET NO.	CONFIRMATION NO.
18/411,476	01/12/2024	David Townley	NEURE-008/03US 35242/151	8746

TITLE OF INVENTION: SYSTEMS AND METHODS FOR IMPROVING SLEEP WITH THERAPEUTIC NASAL TREATMENT

APPLN. TYPE	ENTITY STATUS	ISSUE FEE DUE	PUBLICATION FEE DUE	PREV. PAID ISSUE FEE	TOTAL FEE(S) DUE	DATE DUE
nonprovisional	SMALL	$480	$0.00	$0.00	$480	07/22/2024

THE APPLICATION IDENTIFIED ABOVE HAS BEEN EXAMINED AND IS ALLOWED FOR ISSUANCE AS A PATENT. PROSECUTION ON THE MERITS IS CLOSED. THIS NOTICE OF ALLOWANCE IS NOT A GRANT OF PATENT RIGHTS. THIS APPLICATION IS SUBJECT TO WITHDRAWAL FROM ISSUE AT THE INITIATIVE OF THE OFFICE OR UPON PETITION BY THE APPLICANT. SEE 37 CFR 1.313 AND MPEP 1308.

THE ISSUE FEE AND PUBLICATION FEE (IF REQUIRED) MUST BE PAID WITHIN THREE MONTHS FROM THE MAILING DATE OF THIS NOTICE OR THIS APPLICATION SHALL BE REGARDED AS ABANDONED. THIS STATUTORY PERIOD CANNOT BE EXTENDED. SEE 35 U.S.C. 151. THE ISSUE FEE DUE INDICATED ABOVE DOES NOT REFLECT A CREDIT FOR ANY PREVIOUSLY PAID ISSUE FEE IN THIS APPLICATION. IF AN ISSUE FEE HAS PREVIOUSLY BEEN PAID IN THIS APPLICATION (AS SHOWN ABOVE), THE RETURN OF PART B OF THIS FORM WILL BE CONSIDERED A REQUEST TO REAPPLY THE PREVIOUSLY PAID ISSUE FEE TOWARD THE ISSUE FEE NOW DUE.

HOW TO REPLY TO THIS NOTICE:

I. Review the ENTITY STATUS shown above. If the ENTITY STATUS is shown as SMALL or MICRO, verify whether entitlement to that entity status still applies.

If the ENTITY STATUS is the same as shown above, pay the TOTAL FEE(S) DUE shown above.

If the ENTITY STATUS is changed from that shown above, on PART B - FEE(S) TRANSMITTAL, complete section number 5 titled "Change in Entity Status (from status indicated above)".

For purposes of this notice, small entity fees are 40% the amount of undiscounted fees, and micro entity fees are 20% the amount of undiscounted fees.

II. PART B - FEE(S) TRANSMITTAL, or its equivalent, must be completed and returned to the United States Patent and Trademark Office (USPTO) with your ISSUE FEE and PUBLICATION FEE (if required). If you are charging the fee(s) to your deposit account, section "4b" of Part B - Fee(s) Transmittal should be completed. If an equivalent of Part B is filed, a request to reapply a previously paid issue fee must be clearly made, and delays in processing may occur due to the difficulty in recognizing the paper as an equivalent of Part B.

III. All communications regarding this application must give the application number. Please direct all communications prior to issuance to Mail Stop ISSUE FEE unless advised to the contrary.

IMPORTANT REMINDER: Maintenance fees are due in utility patents issuing on applications filed on or after Dec. 12, 1980. It is patentee's responsibility to ensure timely payment of maintenance fees when due. More information is available at www.uspto.gov/PatentMaintenanceFees.

PTOL-85 (Rev. 11/23)

Aerin Exhibit 1011, Page 26 of 2183
Aerin Medical Inc. v. Neurent Medical Ltd.
IPR2025-01126

PART B - FEE(S) TRANSMITTAL

Complete and send this form, together with applicable fee(s), by mail or fax, or via the USPTO patent electronic filing system.

By mail, send to: Mail Stop ISSUE FEE
Commissioner for Patents
P.O. Box 1450
Alexandria, Virginia 22313-1450

By fax, send to: (571)-273-2885

INSTRUCTIONS: This form should be used for transmitting the ISSUE FEE and PUBLICATION FEE (if required). Blocks 1 through 5 should be completed where appropriate. All further correspondence will be mailed to the current correspondence address as indicated unless corrected below or directed otherwise in Block 1, by (a) specifying a new correspondence address; and/or (b) indicating a separate "FEE ADDRESS" for maintenance fee notifications. **Because electronic patent issuance may occur shortly after issue fee payment, any desired continuing application should preferably be filed prior to payment of this issue fee in order not to jeopardize copendency.**

CURRENT CORRESPONDENCE ADDRESS (Note: Use Block 1 for any change of address)

21710 7590 04/22/2024
BROWN RUDNICK LLP
ONE FINANCIAL CENTER
BOSTON, MA 02111

Note: A certificate of mailing can only be used for domestic mailings of the Fee(s) Transmittal. This certificate cannot be used for any other accompanying papers. Each additional paper, such as an assignment or formal drawing, must have its own certificate of mailing or transmission.

Certificate of Mailing or Transmission

I hereby certify that this Fee(s) Transmittal is being deposited with the United States Postal Service with sufficient postage for first class mail in an envelope addressed to the Mail Stop ISSUE FEE address above, or being transmitted to the USPTO via the USPTO patent electronic filing system or by facsimile to (571) 273-2885, on the date below.

(Typed or printed name)
(Signature)
(Date)

APPLICATION NO.	FILING DATE	FIRST NAMED INVENTOR	ATTORNEY DOCKET NO.	CONFIRMATION NO.
18/411,476	01/12/2024	David Townley	NEURE-008/03US 25242/151	8746

TITLE OF INVENTION: SYSTEMS AND METHODS FOR IMPROVING SLEEP WITH THERAPEUTIC NASAL TREATMENT

APPLN. TYPE	ENTITY STATUS	ISSUE FEE DUE	PUBLICATION FEE DUE	PREV. PAID ISSUE FEE	TOTAL FEE(S) DUE	DATE DUE
nonprovisional	SMALL	$480	$0.00	$0.00	$480	07/22/2024

EXAMINER	ART UNIT	CLASS-SUBCLASS
BOCK, ABIGAIL MARIE	3794	606-041000

1. Change of correspondence address or indication of "Fee Address" (37 CFR 1.363).

❑ Change of correspondence address (or Change of Correspondence Address form PTO/AIA/122 or PTO/SB/122) attached.

❑ "Fee Address" indication (or "Fee Address" Indication form PTO/AIA/47 or PTO/SB/47; Rev 03-02 or more recent) attached. **Use of a Customer Number is required.**

2. For printing on the patent front page, list
(1) The names of up to 3 registered patent attorneys or agents OR, alternatively,
(2) The name of a single firm (having as a member a registered attorney or agent) and the names of up to 2 registered patent attorneys or agents. If no name is listed, no name will be printed.

1 _____
2 _____
3 _____

3. ASSIGNEE NAME AND RESIDENCE DATA TO BE PRINTED ON THE PATENT (print or type)

PLEASE NOTE: Unless an assignee is identified below, no assignee data will appear on the patent. If an assignee is identified below, the document must have been previously recorded, or filed for recordation, as set forth in 37 CFR 3.11 and 37 CFR 3.81(a). Completion of this form is NOT a substitute for filing an assignment.

(A) NAME OF ASSIGNEE (B) RESIDENCE: (CITY and STATE OR COUNTRY)

Please check the appropriate assignee category or categories (will not be printed on the patent) : ❑ Individual ❑ Corporation or other private group entity ❑ Government

4a. Fees submitted: ❑Issue Fee ❑Publication Fee (if required)

4b. Method of Payment: *(Please first reapply any previously paid fee shown above)*

❑ Electronic Payment via the USPTO patent electronic filing system ❑ Enclosed check ❑ Non-electronic payment by credit card (Attach form PTO-2038)

❑ The Director is hereby authorized to charge the required fee(s), any deficiency, or credit any overpayment to Deposit Account No. _____

5. **Change in Entity Status** (from status indicated above)

❑ Applicant certifying micro entity status. See 37 CFR 1.29
NOTE: Absent a valid certification of Micro Entity Status (see forms PTO/SB/15A and 15B), issue fee payment in the micro entity amount will not be accepted at the risk of application abandonment.

❑ Applicant asserting small entity status. See 37 CFR 1.27
NOTE: If the application was previously under micro entity status, checking this box will be taken to be a notification of loss of entitlement to micro entity status.

❑ Applicant changing to regular undiscounted fee status.
NOTE: Checking this box will be taken to be a notification of loss of entitlement to small or micro entity status, as applicable.

NOTE: This form must be signed in accordance with 37 CFR 1.31 and 1.33. See 37 CFR 1.4 for signature requirements and certifications.

Authorized Signature _____ Date _____

Typed or printed name _____ Registration No. _____

Aerin Exhibit 1011, Page 27 of 2183
Aerin Medical Inc. v. Neurent Medical Ltd.
IPR2025-01126

UNITED STATES PATENT AND TRADEMARK OFFICE

UNITED STATES DEPARTMENT OF COMMERCE
United States Patent and Trademark Office
Address: COMMISSIONER FOR PATENTS
P.O. Box 1450
Alexandria, Virginia 22313-1450
www.uspto.gov

APPLICATION NO.	FILING DATE	FIRST NAMED INVENTOR	ATTORNEY DOCKET NO.	CONFIRMATION NO.
18/411,476	01/12/2024	David Townley	NEURE-008/03US ~~35242/151~~	8746

21710 7590 04/22/2024

BROWN RUDNICK LLP
ONE FINANCIAL CENTER
BOSTON, MA 02111

EXAMINER	
BOCK, ABIGAIL MARIE	

ART UNIT	PAPER NUMBER
3794	

DATE MAILED: 04/22/2024

Determination of Patent Term Adjustment under 35 U.S.C. 154 (b)
(Applications filed on or after May 29, 2000)

The Office has discontinued providing a Patent Term Adjustment (PTA) calculation with the Notice of Allowance.

Section 1(h)(2) of the AIA Technical Corrections Act amended 35 U.S.C. 154(b)(3)(B)(i) to eliminate the requirement that the Office provide a patent term adjustment determination with the notice of allowance. See Revisions to Patent Term Adjustment, 78 Fed. Reg. 19416, 19417 (Apr. 1, 2013). Therefore, the Office is no longer providing an initial patent term adjustment determination with the notice of allowance. The Office will continue to provide a patent term adjustment determination with the Issue Notification Letter that is mailed to applicant approximately three weeks prior to the issue date of the patent, and will include the patent term adjustment on the patent. Any request for reconsideration of the patent term adjustment determination (or reinstatement of patent term adjustment) should follow the process outlined in 37 CFR 1.705.

Any questions regarding the Patent Term Extension or Adjustment determination should be directed to the Office of Patent Legal Administration at (571)-272-7702. Questions relating to issue and publication fee payments should be directed to the Customer Service Center of the Office of Patent Publication at 1-(888)-786-0101 or (571)-272-4200.

Aerin Exhibit 1011, Page 28 of 2183
Aerin Medical Inc. v. Neurent Medical Ltd.
IPR2025-01126

OMB Clearance and PRA Burden Statement for PTOL-85 Part B

The Paperwork Reduction Act (PRA) of 1995 requires Federal agencies to obtain Office of Management and Budget approval before requesting most types of information from the public. When OMB approves an agency request to collect information from the public, OMB (i) provides a valid OMB Control Number and expiration date for the agency to display on the instrument that will be used to collect the information and (ii) requires the agency to inform the public about the OMB Control Number's legal significance in accordance with 5 CFR 1320.5(b).

The information collected by PTOL-85 Part B is required by 37 CFR 1.311. The information is required to obtain or retain a benefit by the public which is to file (and by the USPTO to process) an application. Confidentiality is governed by 35 U.S.C. 122 and 37 CFR 1.14. This collection is estimated to take 30 minutes to complete, including gathering, preparing, and submitting the completed application form to the USPTO. Time will vary depending upon the individual case. Any comments on the amount of time you require to complete this form and/or suggestions for reducing this burden, should be sent to the Chief Information Officer, U.S. Patent and Trademark Office, U.S. Department of Commerce, P.O. Box 1450, Alexandria, Virginia 22313-1450. DO NOT SEND FEES OR COMPLETED FORMS TO THIS ADDRESS. SEND TO: Commissioner for Patents, P.O. Box 1450, Alexandria, Virginia 22313-1450. Under the Paperwork Reduction Act of 1995, no persons are required to respond to a collection of information unless it displays a valid OMB control number.

Privacy Act Statement

The Privacy Act of 1974 (P.L. 93-579) requires that you be given certain information in connection with your submission of the attached form related to a patent application or patent. The United States Patent and Trademark Office (USPTO) collects the information in this record under authority of 35 U.S.C. 2. The USPTO's system of records is used to manage all applicant and owner information including name, citizenship, residence, post office address, and other information with respect to inventors and their legal representatives pertaining to the applicant's/ owner's activities in connection with the invention for which a patent is sought or has been granted. The applicable Privacy Act System of Records Notice for the information collected in this form is COMMERCE/PAT-TM-7 Patent Application Files, available in the Federal Register at 78 FR 19243 (March 29, 2013).
https://www.govinfo.gov/content/pkg/FR-2013-03-29/pdf/2013-07341.pdf

Routine uses of the information in this record may include disclosure to:

1) law enforcement, in the event that the system of records indicates a violation or potential violation of law;
2) a federal, state, local, or international agency, in response to its request;
3) a contractor of the USPTO having need for the information in order to perform a contract;
4) the Department of Justice for determination of whether the Freedom of Information Act (FOIA) requires disclosure of the record;
5) a Member of Congress submitting a request involving an individual to whom the record pertains, when the individual has requested the Member's assistance with respect to the subject matter of the record;
6) a court, magistrate, or administrative tribunal, in the course of presenting evidence, including disclosures to opposing counsel in the course of settlement negotiations;
7) the Administrator, General Services Administration (GSA), or their designee, during an inspection of records conducted by GSA under authority of 44 U.S.C. 2904 and 2906, in accordance with the GSA regulations and any other relevant (i.e., GSA or Commerce) directive, where such disclosure shall not be used to make determinations about individuals;
8) another federal agency for purposes of National Security review (35 U.S.C. 181) and for review pursuant to the Atomic Energy Act (42 U.S.C. 218(c));
9) the Office of Personnel Management (OPM) for personnel research purposes; and
10) the Office of Management and Budget (OMB) for legislative coordination and clearance.

If you do not furnish the information requested on this form, the USPTO may not be able to process and/or examine your submission, which may result in termination of proceedings, abandonment of the application, and/or expiration of the patent.

Notice of Allowability	Application No. 18/411,476	Applicant(s) Townley, David	
	Examiner Abigail M Bock	Art Unit 3794	AIA (FITF) Status Yes

-- The MAILING DATE of this communication appears on the cover sheet with the correspondence address--

All claims being allowable, PROSECUTION ON THE MERITS IS (OR REMAINS) CLOSED in this application. If not included herewith (or previously mailed), a Notice of Allowance (PTOL-85) or other appropriate communication will be mailed in due course. **THIS NOTICE OF ALLOWABILITY IS NOT A GRANT OF PATENT RIGHTS.** This application is subject to withdrawal from issue at the initiative of the Office or upon petition by the applicant. See 37 CFR 1.313 and MPEP 1308.

1. ☑ This communication is responsive to the terminal disclaimer filed 04/11/2024.
   ☐ A declaration(s)/affidavit(s) under **37 CFR 1.130(b)** was/were filed on _____.

2. ☐ An election was made by the applicant in response to a restriction requirement set forth during the interview on _____; the restriction requirement and election have been incorporated into this action.

3. ☑ The allowed claim(s) is/are 1-20 . As a result of the allowed claim(s), you may be eligible to benefit from the **Patent Prosecution Highway** program at a participating intellectual property office for the corresponding application. For more information, please see **http://www.uspto.gov/patents/init_events/pph/index.jsp** or send an inquiry to **PPHfeedback@uspto.gov.**

4. ☐ Acknowledgment is made of a claim for foreign priority under 35 U.S.C. § 119(a)-(d) or (f).

   Certified copies:

   a) ☐ All b) ☐ Some* c) ☐ None of the:

   1. ☐ Certified copies of the priority documents have been received.
   2. ☐ Certified copies of the priority documents have been received in Application No. _____ .
   3. ☐ Copies of the certified copies of the priority documents have been received in this national stage application from the International Bureau (PCT Rule 17.2(a)).

   * Certified copies not received: _____ .

Applicant has THREE MONTHS FROM THE "MAILING DATE" of this communication to file a reply complying with the requirements noted below. Failure to timely comply will result in ABANDONMENT of this application.
THIS THREE-MONTH PERIOD IS NOT EXTENDABLE.

5. ☐ CORRECTED DRAWINGS (as "replacement sheets") must be submitted.
   ☐ including changes required by the attached Examiner's Amendment / Comment or in the Office action of Paper No./Mail Date _____ .

   Identifying indicia such as the application number (see 37 CFR 1.84(c)) should be written on the drawings in the front (not the back) of each sheet. Replacement sheet(s) should be labeled as such in the header according to 37 CFR 1.121(d).

6. ☐ DEPOSIT OF and/or INFORMATION about the deposit of BIOLOGICAL MATERIAL must be submitted. Note the attached Examiner's comment regarding REQUIREMENT FOR THE DEPOSIT OF BIOLOGICAL MATERIAL.

Attachment(s)

1. ☐ Notice of References Cited (PTO-892)
2. ☑ Information Disclosure Statements (PTO/SB/08), Paper No./Mail Date _____.
3. ☐ Examiner's Comment Regarding Requirement for Deposit of Biological Material _____.
4. ☐ Interview Summary (PTO-413), Paper No./Mail Date. _____.
5. ☐ Examiner's Amendment/Comment
6. ☑ Examiner's Statement of Reasons for Allowance
7. ☐ Other _____.

/ABIGAIL BOCK/ Examiner, Art Unit 3794	/LINDA C DVORAK/ Supervisory Patent Examiner, Art Unit 3794

DETAILED ACTION

Notice of Pre-AIA or AIA Status

The present application, filed on or after March 16, 2013, is being examined under the first inventor to file provisions of the AIA.

In the event the determination of the status of the application as subject to AIA 35 U.S.C. 102 and 103 (or as subject to pre-AIA 35 U.S.C. 102 and 103) is incorrect, any correction of the statutory basis (i.e., changing from AIA to pre-AIA) for the rejection will not be considered a new ground of rejection if the prior art relied upon, and the rationale supporting the rejection, would be the same under either status.

Information Disclosure Statement

The information disclosure statement (IDS) submitted on 03/19/2024 was filed after the mailing date of the application on 01/12/2024. The submission is in compliance with the provisions of 37 CFR 1.97. Accordingly, the information disclosure statement is being considered by the examiner.

Terminal Disclaimer

The terminal disclaimer filed on 04/11/2024 disclaiming the terminal portion of any patent granted on this application which would extend beyond the expiration date of **Patent No. 11,883,091** has been reviewed and is accepted. The terminal disclaimer has been recorded.

Allowable Subject Matter

The following is an examiner's statement of reasons for allowance:

Upon further consideration of the prior art as a whole, the claimed invention "A method for improving a patient's sleep by treating at least one of rhinitis, congestion, and rhinorrhea within a sino-nasal cavity of a patient, the method comprising: advancing a multi-electrode end effector into the sino-nasal cavity of the patient, the multi-electrode end effector being operably associated with a shaft of a treatment device and configured for delivering energy to one or more target sites within the sino-nasal

cavity of the patient, the multi-electrode end effector comprising a first electrode that is spaced apart from a separate and distinct second electrode along a length of the multi-electrode end effector, wherein each of the first and second electrodes comprises an active state and an inactive state and comprises a respective location on the multi-electrode end effector, wherein: the first electrode is exposed from a surface of the multi-electrode end effector and is positioned at a separate and discrete portion thereon, the first electrode extending in a first outward direction relative to a longitudinal axis of the shaft to interact with anatomy at a first location within the nasal cavity; and the second electrode is exposed from a surface of the multi-electrode end effector and is positioned at a separate and discrete portion thereon, the second electrode extending in a second outward direction relative to a longitudinal axis of the shaft to interact with anatomy at a second location within the nasal cavity; and delivering energy, via the first and second electrodes, to one or more target sites within a sino-nasal cavity of the patient to disrupt multiple neural signals to, and/or result in local hypoxia of, mucus producing and/or mucosal engorgement elements, thereby reducing production of mucus and/or mucosal engorgement within a nose of the patient and reducing or eliminating one or more symptoms associated with at least one of rhinitis, congestion, and rhinorrhea to improve nasal breathability of the patient" is neither taught in part nor in whole. Specifically, the prior art does not teach the structural limitations "wherein each of the first and second electrodes comprises an active state and an inactive state and comprises a respective location on the multi-electrode end effector, wherein: the first electrode is exposed from a surface of the multi-electrode end effector and is positioned at a separate and discrete portion thereon, the first electrode extending in a first outward direction relative to a longitudinal axis of the shaft to interact with anatomy at a first location within the nasal cavity; and the second electrode is exposed from a surface of the multi-electrode end effector and is positioned at a separate and discrete portion thereon, the second electrode extending in a second outward direction relative to a longitudinal axis of the shaft to interact with anatomy at a second location within the nasal

cavity;" that is seen in parent patent (11,883,091), and it would not have been obvious to one of ordinary skill in the art to modify known probe structures to arrive at the claimed structural limitations of the multi-electrode end effector. For at least the reasons outlined above, it is the Examiner's position that the application is now in condition for allowance.

Any comments considered necessary by applicant must be submitted no later than the payment of the issue fee and, to avoid processing delays, should preferably accompany the issue fee. Such submissions should be clearly labeled "Comments on Statement of Reasons for Allowance."

Conclusion

Any inquiry concerning this communication or earlier communications from the examiner should be directed to Abigail M Bock whose telephone number is (571)272-8856. The examiner can normally be reached M-F 7:30am - 5:00pm.

Examiner interviews are available via telephone, in-person, and video conferencing using a USPTO supplied web-based collaboration tool. To schedule an interview, applicant is encouraged to use the USPTO Automated Interview Request (AIR) at http://www.uspto.gov/interviewpractice.

If attempts to reach the examiner by telephone are unsuccessful, the examiner's supervisor, Linda Dvorak can be reached on 5712724764. The fax phone number for the organization where this application or proceeding is assigned is 571-273-8300.

Information regarding the status of published or unpublished applications may be obtained from Patent Center. Unpublished application information in Patent Center is available to registered users. To file and manage patent submissions in Patent Center, visit: https://patentcenter.uspto.gov. Visit https://www.uspto.gov/patents/apply/patent-center for more information about Patent Center and https://www.uspto.gov/patents/docx for information about filing in DOCX format. For additional questions, contact the Electronic Business Center (EBC) at 866-217-9197 (toll-free). If you would like

assistance from a USPTO Customer Service Representative, call 800-786-9199 (IN USA OR CANADA) or 571-272-1000.

/ABIGAIL BOCK/
Examiner, Art Unit 3794

/LINDA C DVORAK/
Supervisory Patent Examiner, Art Unit 3794

Index of Claims	Application/Control No.	Applicant(s)/Patent Under Reexamination
	18/411,476	Townley, David
	Examiner	**Art Unit**
	Abigail M Bock	3794

✓	Rejected	-	Cancelled	N	Non-Elected	A	Appeal
=	Allowed	÷	Restricted	I	Interference	O	Objected

CLAIMS

☐ Claims renumbered in the same order as presented by applicant ☐ CPA ☐ T.D. ☐ R.1.47

CLAIM		DATE								
Final	Original	04/15/2024								
1	1	=								
5	2	=								
8	3	=								
9	4	=								
13	5	=								
14	6	=								
17	7	=								
18	8	=								
19	9	=								
20	10	=								
15	11	=								
16	12	=								
10	13	=								
11	14	=								
12	15	=								
6	16	=								
7	17	=								
3	18	=								
4	19	=								
2	20	=								

Aerin Exhibit 1011, Page 35 of 2183
Aerin Medical Inc. v. Neurent Medical Ltd.
IPR2025-01126

Search Notes	Application/Control No.	Applicant(s)/Patent Under Reexamination
	18/411,476	Townley, David
	Examiner	**Art Unit**
	Abigail M Bock	3794

CPC - Searched*		
Symbol	**Date**	**Examiner**
A61B18/148, A61B2018/00327, A61B2018/00434, A61B2018/00583, A61B2018/1467	04/10/2024	AB

CPC Combination Sets - Searched*		
Symbol	**Date**	**Examiner**

US Classification - Searched*			
Class	**Subclass**	**Date**	**Examiner**

* See search history printout included with this form or the SEARCH NOTES box below to determine the scope of the search.

Search Notes		
Search Notes	**Date**	**Examiner**
Inventor and assignee name search performed in PALM/DAV and PE2E Search.	04/10/2024	AB
Limited text search performed in PE2E Search, see attached search history.	04/10/2024	AB
Discussed claim limitations and parent application with SPE Linda Dvorak	04/10/2024	AB

Interference Search			
US Class/CPC Symbol	**US Subclass/CPC Group**	**Date**	**Examiner**
A	A61B18/148, A61B2018/00327, A61B2018/00434, A61B2018/00583, A61B2018/1467	04/15/2024	AB

/ABIGAIL BOCK/ Examiner, Art Unit 3794	

Search Notes	Application/Control No.	Applicant(s)/Patent Under Reexamination
	18/411,476	Townley, David
	Examiner	Art Unit
	Abigail M Bock	3794

/ABIGAIL BOCK/ Examiner, Art Unit 3794	

Aerin Exhibit 1011, Page 37 of 2183
Aerin Medical Inc. v. Neurent Medical Ltd.
IPR2025-01126

Issue Classification	Application/Control No.	Applicant(s)/Patent Under Reexamination
	18/411,476	Townley, David
	Examiner	**Art Unit**
	Abigail M Bock	3794

CPC						
Symbol					**Type**	**Version**
A61B	/	18	/	148	F	2013-01-01
A61B	/	2018	/	00327	A	2013-01-01
A61B	/	2018	/	00434	A	2013-01-01
A61B	/	2018	/	00583	A	2013-01-01
A61B	/	2018	/	1467	A	2013-01-01

CPC Combination Sets								
Symbol					**Type**	**Set**	**Ranking**	**Version**
	/		/					

/ABIGAIL BOCK/ Examiner, Art Unit 3794	15 April 2024	**Total Claims Allowed:**	
(Assistant Examiner)	(Date)	20	
/LINDA C DVORAK/ Supervisory Patent Examiner, Art Unit 3794	15 April 2024	O.G. Print Claim(s)	O.G. Print Figure
(Primary Examiner)	(Date)	1	11

U.S. Patent and Trademark Office — Part of Paper No.: 20240409

Aerin Exhibit 1011, Page 38 of 2183
Aerin Medical Inc. v. Neurent Medical Ltd.
IPR2025-01126

Issue Classification	Application/Control No.	Applicant(s)/Patent Under Reexamination
	18/411,476	Townley, David
	Examiner	**Art Unit**
	Abigail M Bock	3794

INTERNATIONAL CLASSIFICATION					
CLAIMED					
A61B	/	18	/	14	
A61B18/00	/	18	/	00	

NON-CLAIMED				
	/		/	

US ORIGINAL CLASSIFICATION	
CLASS	**SUBCLASS**

CROSS REFERENCES(S)						
CLASS	**SUBCLASS (ONE SUBCLASS PER BLOCK)**					

/ABIGAIL BOCK/ Examiner, Art Unit 3794	15 April 2024	**Total Claims Allowed:**	
(Assistant Examiner)	(Date)	20	
/LINDA C DVORAK/ Supervisory Patent Examiner, Art Unit 3794	15 April 2024	O.G. Print Claim(s)	O.G. Print Figure
(Primary Examiner)	(Date)	1	11

U.S. Patent and Trademark Office — Part of Paper No.: 20240409

Aerin Exhibit 1011, Page 39 of 2183
Aerin Medical Inc. v. Neurent Medical Ltd.
IPR2025-01126

Issue Classification	Application/Control No.	Applicant(s)/Patent Under Reexamination
	18/411,476	Townley, David
	Examiner	**Art Unit**
	Abigail M Bock	3794

☐ Claims renumbered in the same order as presented by applicant ☐ CPA ☐ T.D. ☐ R.1.47

CLAIMS

Final	Original	Final	Original	Final	Original	Final	Original	Final	Original	Final	Original	Final	Original	Final	Original
1	1	20	10	4	19										
5	2	15	11	2	20										
8	3	16	12												
9	4	10	13												
13	5	11	14												
14	6	12	15												
17	7	6	16												
18	8	7	17												
19	9	3	18												

/ABIGAIL BOCK/ Examiner, Art Unit 3794	15 April 2024	**Total Claims Allowed:**	
(Assistant Examiner)	(Date)	20	
/LINDA C DVORAK/ Supervisory Patent Examiner, Art Unit 3794	15 April 2024	O.G. Print Claim(s)	O.G. Print Figure
(Primary Examiner)	(Date)	1	11

U.S. Patent and Trademark Office

Part of Paper No.: 20240409

Aerin Exhibit 1011, Page 40 of 2183
Aerin Medical Inc. v. Neurent Medical Ltd.
IPR2025-01126

Doc code: IDS
Doc description: Information Disclosure Statement (IDS) Filed

PTO/SB/08a (01-22)
Approved for use through 05/31/2024. OMB 0651-0031
U.S. Patent and Trademark Office; U.S. DEPARTMENT OF COMMERCE
Under the Paperwork Reduction Act of 1995, no persons are required to respond to a collection of information unless it contains a valid OMB control number.

INFORMATION DISCLOSURE STATEMENT BY APPLICANT
(Not for submission under 37 CFR 1.99)

Application Number	18411476
Filing Date	2024-01-12
First Named Inventor	David Townley
Art Unit	N/A
Examiner Name	Not Yet Assigned
Attorney Docket Number	NEURE-008/03US 35242/151

U.S.PATENTS Remove

Examiner Initial*	Cite No	Patent Number	Kind Code[1]	Issue Date	Name of Patentee or Applicant of cited Document	Pages,Columns,Lines where Relevant Passages or Relevant Figures Appear
	1	874178		1907-12-17	LEE DE FOREST	
	2	3117571		1964-01-14	FRY et al.	
	3	3538919		1970-11-10	MEYER ROBERT G	
	4	3941121		1976-03-02	Olinger et al.	
	5	3987795		1976-10-26	Morrison, Charles F.	
	6	4271848		1981-06-09	Turner et al.	
	7	4411266		1983-10-25	Cosman, Eric R.	
	8	4898169		1990-02-06	Norman et al.	

ALL REFERENCES CONSIDERED EXCEPT WHERE LINED THROUGH. /A.M.B./

INFORMATION DISCLOSURE STATEMENT BY APPLICANT (Not for submission under 37 CFR 1.99)		
	Application Number	18411476
	Filing Date	2024-01-12
	First Named Inventor	David Townley
	Art Unit	N/A
	Examiner Name	Not Yet Assigned
	Attorney Docket Number	NEURE-008/03US 35242/151

	9	5184625		1993-02-09	Cottone, Jr. et al.	
	10	5395383		1995-03-07	Adams et al.	
	11	5456662		1995-10-10	Edwards et al.	
	12	5562720		1996-10-08	Stern et al.	
	13	5575788		1996-11-19	Baker et al.	
	14	5588429		1996-12-31	Isaacson et al.	
	15	5697536		1997-12-16	Eggers et al.	
	16	5697882		1997-12-16	Eggers et al.	
	17	5746224		1998-05-05	Edwards	
	18	5766605		1998-06-16	Sanders et al.	
	19	5800429		1998-09-01	Edwards, Stuart D.	

ALL REFERENCES CONSIDERED EXCEPT WHERE LINED THROUGH. /A.M.B./

INFORMATION DISCLOSURE STATEMENT BY APPLICANT (Not for submission under 37 CFR 1.99)		
	Application Number	18411476
	Filing Date	2024-01-12
	First Named Inventor	David Townley
	Art Unit	N/A
	Examiner Name	Not Yet Assigned
	Attorney Docket Number	NEURE-008/03US 35242/151

	20	5823197		1998-10-20	Edwards	
	21	5827277		1998-10-27	Edwards	
	22	5836947		1998-11-17	Fleischman et al.	
	23	5843026		1998-12-01	Edwards et al.	
	24	6033397		2000-03-07	Laufer et al.	
	25	6045532		2000-04-04	Eggers et al.	
	26	6053172		2000-04-25	Hovda et al.	
	27	6063079		2000-05-16	Hovda et al.	
	28	6106518		2000-08-22	Wittenberger et al.	
	29	6139527		2000-10-31	Laufer et al.	
	30	6142991		2000-11-07	Schatzberger, Shaike	

ALL REFERENCES CONSIDERED EXCEPT WHERE LINED THROUGH. /A.M.B./

INFORMATION DISCLOSURE STATEMENT BY APPLICANT (Not for submission under 37 CFR 1.99)		
	Application Number	18411476
	Filing Date	2024-01-12
	First Named Inventor	David Townley
	Art Unit	N/A
	Examiner Name	Not Yet Assigned
	Attorney Docket Number	NEURE-008/03US 35242/151

	31	6273886		2001-08-14	Edwards et al.	
	32	6332880		2001-12-25	Yang et al.	
	33	6352533		2002-03-05	Ellman et al.	
	34	6517534		2003-02-11	McGovern et al.	
	35	6517535		2003-02-11	Edwards, Stuart D.	
	36	6520185		2003-02-18	Bommannan et al.	
	37	6529756		2003-03-04	Phan et al.	
	38	6594518		2003-07-15	Benaron et al.	
	39	6595988		2003-07-22	Wittenberger et al.	
	40	6626899		2003-09-30	Houser et al.	
	41	6652548		2003-11-25	Evans et al.	

ALL REFERENCES CONSIDERED EXCEPT WHERE LINED THROUGH. /A.M.B./

INFORMATION DISCLOSURE STATEMENT BY APPLICANT (Not for submission under 37 CFR 1.99)		
	Application Number	18411476
	Filing Date	2024-01-12
	First Named Inventor	David Townley
	Art Unit	N/A
	Examiner Name	Not Yet Assigned
	Attorney Docket Number	NEURE-008/03US 35242/151

	42	6669689		2003-12-30	Lehmann et al.	
	43	6685648		2004-02-03	Flaherty et al.	
	44	6746474		2004-06-08	Saadat	
	45	7195629		2007-03-27	Behl et al.	
	46	7232458		2007-06-19	Saadat	
	47	7285119		2007-10-23	Stewart et al.	
	48	7500985		2009-03-10	Saadat	
	49	7524318		2009-04-28	Young et al.	
	50	7608275		2009-10-27	Deem et al.	
	51	7654997		2010-02-02	Makower et al.	
	52	7655243		2010-02-02	Deem et al.	

ALL REFERENCES CONSIDERED EXCEPT WHERE LINED THROUGH. /A.M.B./

INFORMATION DISCLOSURE STATEMENT BY APPLICANT (Not for submission under 37 CFR 1.99)		
	Application Number	18411476
	Filing Date	2024-01-12
	First Named Inventor	David Townley
	Art Unit	N/A
	Examiner Name	Not Yet Assigned
	Attorney Docket Number	NEURE-008/03US 35242/151

	53	7758571		2010-07-20	Saadat	
	54	7771409		2010-08-10	Chang et al.	
	55	7803150		2010-09-28	Chang et al.	
	56	8105817		2012-01-31	Deem et al.	
	57	8133497		2012-03-13	Deem et al.	
	58	8231613		2012-07-31	Baxter et al.	
	59	8338164		2012-12-25	Deem et al.	
	60	8372068		2013-02-12	Truckai	
	61	8382746		2013-02-26	Williams et al.	
	62	8460181		2013-06-11	Saadat et al.	
	63	8463359		2013-06-11	Saadat et al.	

ALL REFERENCES CONSIDERED EXCEPT WHERE LINED THROUGH. /A.M.B./

INFORMATION DISCLOSURE STATEMENT BY APPLICANT (Not for submission under 37 CFR 1.99)		
	Application Number	18411476
	Filing Date	2024-01-12
	First Named Inventor	David Townley
	Art Unit	N/A
	Examiner Name	Not Yet Assigned
	Attorney Docket Number	NEURE-008/03US 35242/151

	64	8512324		2013-08-20	Abboud et al.	
	65	8636684		2014-01-28	Deem et al.	
	66	8747401		2014-06-10	Gonzalez et al.	
	67	8920414		2014-12-30	Stone et al.	
	68	8936594		2015-01-20	Wolf et al.	
	69	8939970		2015-01-27	Stone et al.	
	70	8961391		2015-02-24	Deem et al.	
	71	8986301		2015-03-24	Wolf et al.	
	72	8996137		2015-03-31	Ackermann et al.	
	73	9055965		2015-06-16	Chang et al.	
	74	9072597		2015-07-07	Wolf et al.	

ALL REFERENCES CONSIDERED EXCEPT WHERE LINED THROUGH. /A.M.B./

INFORMATION DISCLOSURE STATEMENT BY APPLICANT (Not for submission under 37 CFR 1.99)		
	Application Number	18411476
	Filing Date	2024-01-12
	First Named Inventor	David Townley
	Art Unit	N/A
	Examiner Name	Not Yet Assigned
	Attorney Docket Number	NEURE-008/03US 35242/151

	75	9101384		2015-08-11	Makower et al.	
	76	9179964		2015-11-10	Wolf et al.	
	77	9179967		2015-11-10	Wolf et al.	
	78	9179973		2015-11-10	Nabutovsky et al.	
	79	9233245	B2	2016-01-12	Lamensdorf et al.	
	80	9237924		2016-01-19	Wolf et al.	
	81	9333023		2016-05-10	Wittenberger	
	82	9370649		2016-06-21	Chang et al.	
	83	9415194		2016-08-16	Wolf et al.	
	84	9433463		2016-09-06	Wolf et al.	
	85	9440065		2016-09-13	Ackermann et al.	

ALL REFERENCES CONSIDERED EXCEPT WHERE LINED THROUGH. /A.M.B./

INFORMATION DISCLOSURE STATEMENT BY APPLICANT (Not for submission under 37 CFR 1.99)		
	Application Number	18411476
	Filing Date	2024-01-12
	First Named Inventor	David Townley
	Art Unit	N/A
	Examiner Name	Not Yet Assigned
	Attorney Docket Number	NEURE-008/03US 35242/151

	86	9452010		2016-09-27	Wolf et al.	
	87	9486278		2016-11-08	Wolf et al.	
	88	9498278		2016-11-22	Couture et al.	
	89	9498283		2016-11-22	Deem et al.	
	90	9526571		2016-12-27	Wolf et al.	
	91	9649156		2017-05-16	Jenson et al.	
	92	9655667		2017-05-23	Hon	
	93	9687288		2017-06-27	Saadat	
	94	9687296		2017-06-27	Wolf et al.	
	95	9700707		2017-07-11	Deem et al.	
	96	9737702		2017-08-22	Ackermann et al.	

ALL REFERENCES CONSIDERED EXCEPT WHERE LINED THROUGH. /A.M.B./

INFORMATION DISCLOSURE STATEMENT BY APPLICANT (Not for submission under 37 CFR 1.99)		
	Application Number	18411476
	Filing Date	2024-01-12
	First Named Inventor	David Townley
	Art Unit	N/A
	Examiner Name	Not Yet Assigned
	Attorney Docket Number	NEURE-008/03US 35242/151

	97	9763723		2017-09-19	Saadat	
	98	9763743		2017-09-19	Lin et al.	
	99	9788886		2017-10-17	Wolf et al.	
	100	9801752		2017-10-31	Wolf et al.	
	101	9888957		2018-02-13	Wolf et al.	
	102	9913682		2018-03-13	Wolf et al.	
	103	9943361		2018-04-17	Wolf et al.	
	104	10022529		2018-07-17	Deem et al.	
	105	10028780		2018-07-24	Wolf et al.	
	106	10028781		2018-07-24	Saadat	
	107	10052465		2018-08-21	Deem et al.	

ALL REFERENCES CONSIDERED EXCEPT WHERE LINED THROUGH. /A.M.B./

INFORMATION DISCLOSURE STATEMENT BY APPLICANT (Not for submission under 37 CFR 1.99)		
	Application Number	18411476
	Filing Date	2024-01-12
	First Named Inventor	David Townley
	Art Unit	N/A
	Examiner Name	Not Yet Assigned
	Attorney Docket Number	NEURE-008/03US 35242/151

	108	10155108		2018-12-18	Ackermann et al.	
	109	10159538		2018-12-25	Lin et al.	
	110	10201687		2019-02-12	Saadat	
	111	10238861		2019-03-26	Ackermann et al.	
	112	10252048		2019-04-09	Loudin et al.	
	113	10265115		2019-04-23	Wolf et al.	
	114	10307200		2019-06-04	Saadat	
	115	10335221		2019-07-02	Wolf et al.	
	116	10363094		2019-07-30	Brannan et al.	
	117	10376300		2019-08-13	Wolf et al.	
	118	10398489		2019-09-03	Wolf et al.	

ALL REFERENCES CONSIDERED EXCEPT WHERE LINED THROUGH. /A.M.B./

INFORMATION DISCLOSURE STATEMENT BY APPLICANT (Not for submission under 37 CFR 1.99)		
	Application Number	18411476
	Filing Date	2024-01-12
	First Named Inventor	David Townley
	Art Unit	N/A
	Examiner Name	Not Yet Assigned
	Attorney Docket Number	NEURE-008/03US 35242/151

	119	10448985		2019-10-22	Saadat	
	120	10456185		2019-10-29	Wolf et al.	
	121	10456186		2019-10-29	Wolf et al.	
	122	10485603		2019-11-26	Wolf et al.	
	123	10588682		2020-03-17	Kelly et al.	
	124	10610675		2020-04-07	Deem et al.	
	125	10687883		2020-06-23	Aklog et al.	
	126	10695557		2020-06-30	Townley et al.	
	127	10729897		2020-08-04	Deem et al.	
	128	10894011		2021-01-19	Deem et al.	
	129	11033318		2021-06-15	Wolf et al.	

ALL REFERENCES CONSIDERED EXCEPT WHERE LINED THROUGH. /A.M.B./

INFORMATION DISCLOSURE STATEMENT BY APPLICANT (Not for submission under 37 CFR 1.99)		
	Application Number	18411476
	Filing Date	2024-01-12
	First Named Inventor	David Townley
	Art Unit	N/A
	Examiner Name	Not Yet Assigned
	Attorney Docket Number	NEURE-008/03US 35242/151

	130	11241271		2022-02-08	Wolf et al.	
	131	11304746		2022-04-19	Wolf et al.	
	132	11679077		2023-06-20	Deem et al.	
	133	11766286		2023-09-26	Wolf et al.	

If you wish to add additional U.S. Patent citation information please click the Add button. Add

U.S.PATENT APPLICATION PUBLICATIONS Remove

Examiner Initial*	Cite No	Publication Number	Kind Code[1]	Publication Date	Name of Patentee or Applicant of cited Document	Pages,Columns,Lines where Relevant Passages or Relevant Figures Appear
	1	20020068930	A1	2002-06-06	Tasto et al.	
	2	20020072742	A1	2002-06-13	Schaefer et al.	
	3	20020177765	A1	2002-11-28	Bowe et al.	
	4	20030016085	A1	2003-01-23	Yamazaki	
	5	20030212394	A1	2003-11-13	Pearson et al.	

ALL REFERENCES CONSIDERED EXCEPT WHERE LINED THROUGH. /A.M.B./

INFORMATION DISCLOSURE STATEMENT BY APPLICANT (Not for submission under 37 CFR 1.99)		
	Application Number	18411476
	Filing Date	2024-01-12
	First Named Inventor	David Townley
	Art Unit	N/A
	Examiner Name	Not Yet Assigned
	Attorney Docket Number	NEURE-008/03US 35242/151

	6	20050080409	A1	2005-04-14	Young et al.	
	7	20050171536	A1	2005-08-04	Phan et al.	
	8	20050171574	A1	2005-08-04	Rubinsky et al.	
	9	20050171582	A1	2005-08-04	Matlock	
	10	20050171583	A1	2005-08-04	Mosher et al.	
	11	20050187546	A1	2005-08-25	Bek et al.	
	12	20050240147	A1	2005-10-27	Makower et al.	
	13	20050283148	A1	2005-12-22	Janssen et al.	
	14	20050288730	A1	2005-12-29	Deem et al.	
	15	20060036237	A1	2006-02-16	Davison et al.	
	16	20060055942	A1	2006-03-16	Krattiger, Beat	

ALL REFERENCES CONSIDERED EXCEPT WHERE LINED THROUGH. /A.M.B./

INFORMATION DISCLOSURE STATEMENT BY APPLICANT (Not for submission under 37 CFR 1.99)		
	Application Number	18411476
	Filing Date	2024-01-12
	First Named Inventor	David Townley
	Art Unit	N/A
	Examiner Name	Not Yet Assigned
	Attorney Docket Number	NEURE-008/03US 35242/151

	17	20060100620	A1	2006-05-11	Daniel et al.	
	18	20060106375	A1	2006-05-18	Werneth et al.	
	19	20060116599	A1	2006-06-01	Davis, Grant E.	
	20	20060149226	A1	2006-07-06	McCullagh et al.	
	21	20060247683	A1	2006-11-02	Danek et al.	
	22	20070006975	A1	2007-01-11	Corghi, Remo	
	23	20070031341	A1	2007-02-08	DiMauro et al.	
	24	20070032786	A1	2007-02-08	Francischelli, David E.	
	25	20070083194	A1	2007-04-12	Kunis et al.	
	26	20070083195	A1	2007-04-12	Werneth et al.	
	27	20070093803	A1	2007-04-26	Dalbec et al.	

ALL REFERENCES CONSIDERED EXCEPT WHERE LINED THROUGH. /A.M.B./

INFORMATION DISCLOSURE STATEMENT BY APPLICANT (Not for submission under 37 CFR 1.99)		
	Application Number	18411476
	Filing Date	2024-01-12
	First Named Inventor	David Townley
	Art Unit	N/A
	Examiner Name	Not Yet Assigned
	Attorney Docket Number	NEURE-008/03US 35242/151

	28	20070129760	A1	2007-06-07	Demarais et al.	
	29	20070173760	A1	2007-07-26	Fedenia et al.	
	30	20070219600	A1	2007-09-20	Gertner et al.	
	31	20070233191	A1	2007-10-04	Parmer, Jonathan B.	
	32	20070265608	A1	2007-11-15	Hernandez, Lyndon V.	
	33	20070287994	A1	2007-12-13	Patel, Pankaj Amrit	
	34	20070299433	A1	2007-12-27	Williams et al.	
	35	20080021369	A1	2008-01-24	Deem et al.	
	36	20080154250	A1	2008-06-26	Makower et al.	
	37	20080287908	A1	2008-11-20	Muni et al.	
	38	20090198216	A1	2009-08-06	Muni et al.	

ALL REFERENCES CONSIDERED EXCEPT WHERE LINED THROUGH. /A.M.B./

INFORMATION DISCLOSURE STATEMENT BY APPLICANT (Not for submission under 37 CFR 1.99)		
	Application Number	18411476
	Filing Date	2024-01-12
	First Named Inventor	David Townley
	Art Unit	N/A
	Examiner Name	Not Yet Assigned
	Attorney Docket Number	NEURE-008/03US 35242/151

	39	20090306644	A1	2009-12-10	Mayse et al.	
	40	20090318914	A1	2009-12-24	Utley et al.	
	41	20100049187	A1	2010-02-25	Carlton et al.	
	42	20100057048	A1	2010-03-04	Eldredge	
	43	20100168737	A1	2010-07-01	Grunewald	
	44	20100204560	A1	2010-08-12	Salahieh et al.	
	45	20100305715	A1	2010-12-02	Mathis et al.	
	46	20110004207	A1	2011-01-06	Wallace et al.	
	47	20110152855	A1	2011-06-23	Mayse et al.	
	48	20110238057	A1	2011-09-29	Moss et al.	
	49	20110264086	A1	2011-10-27	Ingle	

ALL REFERENCES CONSIDERED EXCEPT WHERE LINED THROUGH. /A.M.B./

INFORMATION DISCLOSURE STATEMENT BY APPLICANT (Not for submission under 37 CFR 1.99)		
	Application Number	18411476
	Filing Date	2024-01-12
	First Named Inventor	David Townley
	Art Unit	N/A
	Examiner Name	Not Yet Assigned
	Attorney Docket Number	NEURE-008/03US 35242/151

	50	20120078377	A1	2012-03-29	Gonzales et al.	
	51	20120191003		2012-07-26	Robert Garabedian	
	52	20120259326	A1	2012-10-11	Brannan et al.	
	53	20120323214	A1	2012-12-20	Shantha	
	54	20120323227	A1	2012-12-20	Wolf et al.	
	55	20120323232	A1	2012-12-20	Wolf et al.	
	56	20130018367	A1	2013-01-17	Wu et al.	
	57	20130123778	A1	2013-05-16	RICHARDSON et al.	
	58	20130158475	A1	2013-06-20	Xia et al.	
	59	20130165916	A1	2013-06-27	MATHUR et al.	
	60	20130172877		2013-07-04	Boston Scientific Scimed, Inc.	

ALL REFERENCES CONSIDERED EXCEPT WHERE LINED THROUGH. /A.M.B./

INFORMATION DISCLOSURE STATEMENT BY APPLICANT (Not for submission under 37 CFR 1.99)		
	Application Number	18411476
	Filing Date	2024-01-12
	First Named Inventor	David Townley
	Art Unit	N/A
	Examiner Name	Not Yet Assigned
	Attorney Docket Number	NEURE-008/03US 35242/151

	61	20130178910	A1	2013-07-11	Azamian et al.	
	62	20130253387	A1	2013-09-26	Bonutti et al.	
	63	20130253389	A1	2013-09-26	JUTO et al.	
	64	20130282084	A1	2013-10-24	Mathur et al.	
	65	20130289552	A1	2013-10-31	Young, Kimbolt	
	66	20140005706	A1	2014-01-02	Gelfand et al.	
	67	20140018792	A1	2014-01-16	Gang et al.	
	68	20140025069	A1	2014-01-23	WILLARD et al.	
	69	20140074091	A1	2014-03-13	ARYA et al.	
	70	20140100557	A1	2014-04-10	Bohner et al.	
	71	20140114233	A1	2014-04-24	Deem et al.	

ALL REFERENCES CONSIDERED EXCEPT WHERE LINED THROUGH. /A.M.B./

INFORMATION DISCLOSURE STATEMENT BY APPLICANT (Not for submission under 37 CFR 1.99)		
	Application Number	18411476
	Filing Date	2024-01-12
	First Named Inventor	David Townley
	Art Unit	N/A
	Examiner Name	Not Yet Assigned
	Attorney Docket Number	NEURE-008/03US 35242/151

	72	20140180196	A1	2014-06-26	STONE et al.	
	73	20140200581	A1	2014-07-17	Aluru et al.	
	74	20140243793	A1	2014-08-28	Morriss et al.	
	75	20140276752	A1	2014-09-18	WANG et al.	
	76	20140303665	A1	2014-10-09	Gerrans et al.	
	77	20150006606	A1	2015-01-01	Fleury et al.	
	78	20150018818	A1	2015-01-15	WILLARD et al.	
	79	20150031946	A1	2015-01-29	SAADAT et al.	
	80	20150066006	A1	2015-03-05	Srivastava	
	81	20150112321	A1	2015-04-23	Cadouri	
	82	20150119881	A1	2015-04-30	BAGLEY et al.	

ALL REFERENCES CONSIDERED EXCEPT WHERE LINED THROUGH. /A.M.B./

INFORMATION DISCLOSURE STATEMENT BY APPLICANT (Not for submission under 37 CFR 1.99)		
	Application Number	18411476
	Filing Date	2024-01-12
	First Named Inventor	David Townley
	Art Unit	N/A
	Examiner Name	Not Yet Assigned
	Attorney Docket Number	NEURE-008/03US 35242/151

	83	20150150624	A1	2015-06-04	Petersohn	
	84	20150164571	A1	2015-06-18	SAADAT	
	85	20150182282	A1	2015-07-02	Zemel et al.	
	86	20150202003	A1	2015-07-23	WOLF et al.	
	87	20150257754	A1	2015-09-17	WENG et al.	
	88	20150257824	A1	2015-09-17	Mauch	
	89	20150257825	A1	2015-09-17	Kelly et al.	
	90	20150265812	A1	2015-09-24	LALONDE	
	91	20150289750	A1	2015-10-15	Stigall et al.	
	92	20150297282	A1	2015-10-22	CADOURI	
	93	20150313669	A1	2015-11-05	Darmos et al.	

ALL REFERENCES CONSIDERED EXCEPT WHERE LINED THROUGH. /A.M.B./

INFORMATION DISCLOSURE STATEMENT BY APPLICANT (Not for submission under 37 CFR 1.99)		
	Application Number	18411476
	Filing Date	2024-01-12
	First Named Inventor	David Townley
	Art Unit	N/A
	Examiner Name	Not Yet Assigned
	Attorney Docket Number	NEURE-008/03US 35242/151

	94	20150351836	A1	2015-12-10	PRUTCHI	
	95	20160008053	A1	2016-01-14	MATHUR et al.	
	96	20160015450	A1	2016-01-21	WOLF et al.	
	97	20160045277	A1	2016-02-18	LIN et al.	
	98	20160120598	A1	2016-05-05	Brink et al.	
	99	20160128767	A1	2016-05-12	Azamian et al.	
	100	20160250474	A1	2016-09-01	Stack et al.	
	101	20160287315	A1	2016-10-06	Wolf et al.	
	102	20160331459	A1	2016-11-17	Townley et al.	
	103	20160354136	A1	2016-12-08	Saadat	
	104	20170071494	A1	2017-03-16	Solis et al.	

ALL REFERENCES CONSIDERED EXCEPT WHERE LINED THROUGH. /A.M.B./

INFORMATION DISCLOSURE STATEMENT BY APPLICANT (Not for submission under 37 CFR 1.99)		
	Application Number	18411476
	Filing Date	2024-01-12
	First Named Inventor	David Townley
	Art Unit	N/A
	Examiner Name	Not Yet Assigned
	Attorney Docket Number	NEURE-008/03US 35242/151

	105	20170095252	A1	2017-04-06	Smith et al.	
	106	20170095288	A1	2017-04-06	Wolf et al.	
	107	20170151014	A1	2017-06-01	Perfler	
	108	20170209199	A1	2017-07-27	Wolf et al.	
	109	20170215950	A1	2017-08-03	GROSS et al.	
	110	20170215952	A1	2017-08-03	Nair	
	111	20170231474	A1	2017-08-17	Saadat et al.	
	112	20170231651	A1	2017-08-17	DINGER et al.	
	113	20170245924	A1	2017-08-31	WOLF et al.	
	114	20170252089	A1	2017-09-07	Hester et al.	
	115	20170252100	A1	2017-09-07	WOLF et al.	

ALL REFERENCES CONSIDERED EXCEPT WHERE LINED THROUGH. /A.M.B./

INFORMATION DISCLOSURE STATEMENT BY APPLICANT (Not for submission under 37 CFR 1.99)		
	Application Number	18411476
	Filing Date	2024-01-12
	First Named Inventor	David Townley
	Art Unit	N/A
	Examiner Name	Not Yet Assigned
	Attorney Docket Number	NEURE-008/03US 35242/151

	116	20170266422	A1	2017-09-21	Deem et al.	
	117	20170312021	A1	2017-11-02	Pilcher et al.	
	118	20180042471	A1	2018-02-15	Chandler et al.	
	119	20180049802	A1	2018-02-22	YANG et al.	
	120	20180063678	A1	2018-03-01	Zhu et al.	
	121	20180078327	A1	2018-03-22	Lin et al.	
	122	20180103994	A1	2018-04-19	Fox et al.	
	123	20180125560	A1	2018-05-10	Saadat et al.	
	124	20180133460	A1	2018-05-17	Townley et al.	
	125	20180153375	A1	2018-06-07	Saadat et al.	
	126	20180161577	A1	2018-06-14	Goedeke et al.	

ALL REFERENCES CONSIDERED EXCEPT WHERE LINED THROUGH. /A.M.B./

INFORMATION DISCLOSURE STATEMENT BY APPLICANT (Not for submission under 37 CFR 1.99)		
	Application Number	18411476
	Filing Date	2024-01-12
	First Named Inventor	David Townley
	Art Unit	N/A
	Examiner Name	Not Yet Assigned
	Attorney Docket Number	NEURE-008/03US 35242/151

	127	20180168503	A1	2018-06-21	Waldhauser et al.	
	128	20180169414	A1	2018-06-21	Goedeke et al.	
	129	20180177542	A1	2018-06-28	WOLF et al.	
	130	20180177546	A1	2018-06-28	DINGER et al.	
	131	20180185085	A1	2018-07-05	Wolf et al.	
	132	20180228533	A1	2018-08-16	WOLF et al.	
	133	20180317993	A1	2018-11-08	Saadat	
	134	20180317997	A1	2018-11-08	DINGER et al.	
	135	20180344378	A1	2018-12-06	WOLF et al.	
	136	20180344411	A1	2018-12-06	Fahey et al.	
	137	20190069949	A1	2019-03-07	Vrba et al.	

ALL REFERENCES CONSIDERED EXCEPT WHERE LINED THROUGH. /A.M.B./

INFORMATION DISCLOSURE STATEMENT BY APPLICANT (Not for submission under 37 CFR 1.99)		
	Application Number	18411476
	Filing Date	2024-01-12
	First Named Inventor	David Townley
	Art Unit	N/A
	Examiner Name	Not Yet Assigned
	Attorney Docket Number	NEURE-008/03US 35242/151

	138	20190076185	A1	2019-03-14	DINGER et al.	
	139	20190083157	A1	2019-03-21	Saadat	
	140	20190175242	A1	2019-06-13	WOLF et al.	
	141	20190223944	A1	2019-07-25	Coates	
	142	20190231409	A1	2019-08-01	WOLF et al.	
	143	20190231429	A1	2019-08-01	Townley et al.	
	144	20190239953	A1	2019-08-08	Townley et al.	
	145	20190239954	A1	2019-08-08	Townley et al.	
	146	20190239955	A1	2019-08-08	Townley et al.	
	147	20190239956	A1	2019-08-08	Townley et al.	
	148	20190239957	A1	2019-08-08	Townley et al.	

ALL REFERENCES CONSIDERED EXCEPT WHERE LINED THROUGH. /A.M.B./

INFORMATION DISCLOSURE STATEMENT BY APPLICANT (Not for submission under 37 CFR 1.99)		
	Application Number	18411476
	Filing Date	2024-01-12
	First Named Inventor	David Townley
	Art Unit	N/A
	Examiner Name	Not Yet Assigned
	Attorney Docket Number	NEURE-008/03US 35242/151

	149	20190282289	A1	2019-09-19	WOLF et al.	
	150	20190314620	A1	2019-10-17	Chang et al.	
	151	20200078134	A1	2020-03-12	Loyd et al.	
	152	20200086112	A1	2020-03-19	Townley et al.	
	153	20200107882	A1	2020-04-09	Townley et al.	
	154	20200129223	A1	2020-04-30	Angeles et al.	
	155	20200289185	A1	2020-09-17	FORSYTH et al.	
	156	20210315627	A1	2021-10-14	BABKIN et al.	

If you wish to add additional U.S. Published Application citation information please click the Add button. Add

FOREIGN PATENT DOCUMENTS Remove

Examiner Initial*	Cite No	Foreign Document Number[3]	Country Code[2] ¡	Kind Code[4]	Publication Date	Name of Patentee or Applicant of cited Document	Pages,Columns,Lines where Relevant Passages or Relevant Figures Appear	T[5]
	1	2929852	EP	A1	2015-10-14	Holaira, Inc		☐

ALL REFERENCES CONSIDERED EXCEPT WHERE LINED THROUGH. /A.M.B./

INFORMATION DISCLOSURE STATEMENT BY APPLICANT (Not for submission under 37 CFR 1.99)		
	Application Number	18411476
	Filing Date	2024-01-12
	First Named Inventor	David Townley
	Art Unit	N/A
	Examiner Name	Not Yet Assigned
	Attorney Docket Number	NEURE-008/03US 35242/151

	2	2001-120565	JP	A	2001-05-08	Olympus Optical Co		☒
	3	2001-526077	JP	A	2001-12-18	Somnus Medical Technologies Inc		☒
	4	2007/537784	JP	A	2007-12-27	Acclarent, Inc.		☒
	5	2009-538641	JP	A	2009-11-12	THE FOUNDRY, LLC		☒
	6	2012-143573	JP	A	2012-08-02	Medtronic Ardian Luxembourg Sarl		☒
	7	2015-507964	JP	A	2015-03-16	DOLOR TECHNOLOGIES, LLC		☒
	8	2018-515314	JP	A	2018-06-14	National University of Ireland Galway NUI		☒
	9	01/17450	WO	A1	2001-03-15	Curon Medical, Inc		☐
	10	2007/008954	WO	A2	2007-01-18	Ablation Frontiers		☐
	11	2009/154456	WO	A1	2009-12-23	Kerphos B V		☐
	12	2010/077980	WO	A1	2010-07-08	Aardvark Medical, Inc		☐

ALL REFERENCES CONSIDERED EXCEPT WHERE LINED THROUGH. /A.M.B./

INFORMATION DISCLOSURE STATEMENT BY APPLICANT (Not for submission under 37 CFR 1.99)		
	Application Number	18411476
	Filing Date	2024-01-12
	First Named Inventor	David Townley
	Art Unit	N/A
	Examiner Name	Not Yet Assigned
	Attorney Docket Number	NEURE-008/03US 35242/151

	13	2015/013252	WO	A1	2015-01-29	Wedge Therapeutics, LLC		☐
	14	2015/048806	WO	A2	2015-04-02	Nidus Medical, LLC		☐
	15	2016/134264	WO	A1	2016-08-25	Boston Scient Scimed Inc		☐
	16	2016/183337	WO	A2	2016-11-17	Nat Univ Ireland Galway		☐
	17	2018/087601	WO	A1	2018-05-17	National University Of Ireland, Galway		☐
	18	2021/205230	WO	A1	2021-10-14	Neurent Medical Ltd		☐
	19	2021/205231	WO	A1	2021-10-14	Neurent Medical Ltd		☐
	20	2021/260435	WO	A1	2021-12-30	Neurent Medical Ltd		☐
	21	94/10921	WO	A1	1994-05-26	Ep Technologies, Inc		☐

If you wish to add additional Foreign Patent Document citation information please click the Add button Add

NON-PATENT LITERATURE DOCUMENTS Remove

Examiner Initials*	Cite No	Include name of the author (in CAPITAL LETTERS), title of the article (when appropriate), title of the item (book, magazine, journal, serial, symposium, catalog, etc), date, pages(s), volume-issue number(s), publisher, city and/or country where published.	T5

ALL REFERENCES CONSIDERED EXCEPT WHERE LINED THROUGH. /A.M.B./

INFORMATION DISCLOSURE STATEMENT BY APPLICANT (Not for submission under 37 CFR 1.99)		
	Application Number	18411476
	Filing Date	2024-01-12
	First Named Inventor	David Townley
	Art Unit	N/A
	Examiner Name	Not Yet Assigned
	Attorney Docket Number	NEURE-008/03US 35242/151

	1	Annotated Perfler Fig 11 (2022)	☐
	2	Anonymous: Flexible electronics - Wikipedia, 8 August 2022, pages 1-9	☐
	3	Arora, 1980, Cryodestruction of Vidian Nerve Branches, Indian Journal of Otolaryngology, 32(3):80-82	☐
	4	Chen, 2005, Radiofrequency treatment of nasal posterior-under nerve ethmoidal nerve and infraturbinal for perennial allergic rhinitis under nasal endoscope, China Journal of Endoscopy, 11(3):239-243	☐
	5	Fang, 2005, Nasal endoscopy combined with multiple radiofrequency for perennial allergic rhinitis, J. First Mil. Medic Univ., 25(7):876-877	☐
	6	Horesh, 2006, Some novel approaches in modelling and image reconstruction for multi-frequency Electrical Impedance Tomography of the human brain, Thesis (Ph.D.)--University of London, University College London (United Kingdom), 2006.; Publication Number: AAT U592053	☐
	7	Ikeda, 2008, Effect of resection of the posterior nasal nerve on functional and morphological changes in the inferior turbinate mucosa, Acta Oto-Laryngologica, 128, pages 1337-1341	☐
	8	International Search Report and Written Opinion for International Application No. PCT/US2016/032132, filed May 12, 2016, Applicant: NATIONAL UNIVERSITY OF IRELAND, GALWAY, Date of Mailing: November 14, 2016, 26 pages	☐
	9	International Search Report and Written Opinion issued in International Application No. PCT/IB2019/001298, date of mailing May 12, 2020, 15 pages	☐
	10	International Search Report and Written Opinion issued in International Application No. PCT/IB2021/000234, date of mailing: August 6, 2021, 14 pages	☐
	11	International Search Report and Written Opinion issued in International Application No. PCT/IB2021/000243, date of mailing: August 25, 2021, 15 pages	☐

ALL REFERENCES CONSIDERED EXCEPT WHERE LINED THROUGH. /A.M.B./

INFORMATION DISCLOSURE STATEMENT BY APPLICANT (Not for submission under 37 CFR 1.99)		
	Application Number	18411476
	Filing Date	2024-01-12
	First Named Inventor	David Townley
	Art Unit	N/A
	Examiner Name	Not Yet Assigned
	Attorney Docket Number	NEURE-008/03US 35242/151

	12	International Search Report and Written Opinion issued in International Application No. PCT/IB2021/000597, date of mailing: January 22, 2022, 18 pages	☐
	13	International Search Report and Written Opinion issued in International Application No. PCT/IB2021/000667, date of mailing: February 2, 2022, 17 pages	☐
	14	International Search Report and Written Opinion issued in International Application No. PCT/IB2021/000699, date mailing: February 4, 2022, 28 pages	☐
	15	International Search Report and Written Opinion issued in International Application No. PCT/IB2021/000700, date of mailing: April 4, 2022, 20 pages	☐
	16	International Search Report and Written Opinion issued in International Application No. PCT/IB2020/000544, date of mailing January 11, 2021, 15 pages	☐
	17	International Search Report and Written Opinion issued in International Application No. PCT/IB2017/001541, date of mailing: April 3, 2018, 15 pages	☐
	18	Kanaya, 2009, Endoscopic posterior nasal neurectomy: an alternative to Vidian neurectomy, Clinical and Experimental Allergy Reviews, pages 24-27	☐
	19	Kikawada, 2007, Endoscopic posterior nasal neurectomy: An alternative to vidian neurectomy, Operative Techniques in Otolaryngology, 18(4), 5 pages	☐
	20	Kobayashi, 2012, Resection of peripheral branches of the posterior nasal nerve compared to conventional posterior neuectomy in severe allergic rhinitis, Auris Nasus Larynx, 39 (2012):593-596	☐
	21	Kong, 2005, Low-temperature plasma ablation of inferior turbinate for the treatment of perennial allergic rhinitis, 19:5 J Clin Otorhinolaryngol (China), 19:5:214	☐
	22	Lane, 2004, Nasal anatomy and physiology, Facial Plast Surg Clin North Am., 12(4):387-395	☐

ALL REFERENCES CONSIDERED EXCEPT WHERE LINED THROUGH. /A.M.B./

INFORMATION DISCLOSURE STATEMENT BY APPLICANT (Not for submission under 37 CFR 1.99)		
	Application Number	18411476
	Filing Date	2024-01-12
	First Named Inventor	David Townley
	Art Unit	N/A
	Examiner Name	Not Yet Assigned
	Attorney Docket Number	NEURE-008/03US 35242/151

	23	Lee, 2003, Sampling and Reconstruction, In: Structure and Interpretation of Singals and Systems, Reading, MA: Addison-Wesley, ISBN: 0-201-74551-8, Pearson Education, Inc., pp. 373-392	☐
	24	Liang, 1999, Radiofrequency treatment of ethmoidal nerve with allergic rhinitis under nasal endoscopy, J. Clin Otorhinolaryngol, 13(8):341-342	☐
	25	Lin, 2003, Radiofrequency for the treatment of allergic rhinits refactory to medical therapy, The Laryngoscope, 113, pages 673-678	☐
	26	Lin, 2010, Long-term results of radiofrequency turbinoplasty for allergic rhinits refactor to medical therapy, Arch Otolaryngol Head Neck Surg, 136(9) 4 pages	☐
	27	Min, 2015, Impedance Detection, In: Li, D. (eds) Encyclopedia of Microfluidics and Nanofluidics, Springer, New York, NY, https://doi.org/10.1007/978-1-4614-5491-5_1783, pp. 1333-1472	☐
	28	Neubauer, 2022, Endothelial cells and coagulation, Cell Tissue Res, 387:391-398	☐
	29	Ozenbeger, 1970, Cryosurgery in chronic rhinitis, The Laryngoscope, vol. 8, issue 5, pp. 723-734	☐
	30	Ozenberger, 1973, Cryosurgery for the treatment of chronic rhinitis, The Laryngoscope, vol. 83, issue 4, pp. 508-516	☐
	31	Paterno, 2009, Frequency-dpmain reconstruction of singals in electrical bioimpedance spectroscopy, Med Biol Eng Comput, 47(10):1093-1102	☐
	32	Yang, 2014, Electrical Impedance Tomography: Algorithms and Application, University of Bath, 143 pages	☐

If you wish to add additional non-patent literature document citation information please click the Add button Add

ALL REFERENCES CONSIDERED EXCEPT WHERE LINED THROUGH. /A.M.B./

INFORMATION DISCLOSURE STATEMENT BY APPLICANT (Not for submission under 37 CFR 1.99)		
	Application Number	18411476
	Filing Date	2024-01-12
	First Named Inventor	David Townley
	Art Unit	N/A
	Examiner Name	Not Yet Assigned
	Attorney Docket Number	NEURE-008/03US 35242/151

EXAMINER SIGNATURE			
Examiner Signature	/ABIGAIL BOCK/	Date Considered	04/10/2024

*EXAMINER: Initial if reference considered, whether or not citation is in conformance with MPEP 609. Draw line through a citation if not in conformance and not considered. Include copy of this form with next communication to applicant.

[1] See Kind Codes of USPTO Patent Documents at www.USPTO.GOV or MPEP 901.04. [2] Enter office that issued the document, by the two-letter code (WIPO Standard ST.3). [3] For Japanese patent documents, the indication of the year of the reign of the Emperor must precede the serial number of the patent document. [4] Kind of document by the appropriate symbols as indicated on the document under WIPO Standard ST.16 if possible. [5] Applicant is to place a check mark here if English language translation is attached.

ALL REFERENCES CONSIDERED EXCEPT WHERE LINED THROUGH. /A.M.B./

INFORMATION DISCLOSURE STATEMENT BY APPLICANT (Not for submission under 37 CFR 1.99)		
	Application Number	18411476
	Filing Date	2024-01-12
	First Named Inventor	David Townley
	Art Unit	N/A
	Examiner Name	Not Yet Assigned
	Attorney Docket Number	NEURE-008/03US 35242/151

CERTIFICATION STATEMENT

Please see 37 CFR 1.97 and 1.98 to make the appropriate selection(s):

☐ That each item of information contained in the information disclosure statement was first cited in any communication from a foreign patent office in a counterpart foreign application not more than three months prior to the filing of the information disclosure statement. See 37 CFR 1.97(e)(1).

OR

☐ That no item of information contained in the information disclosure statement was cited in a communication from a foreign patent office in a counterpart foreign application, and, to the knowledge of the person signing the certification after making reasonable inquiry, no item of information contained in the information disclosure statement was known to any individual designated in 37 CFR 1.56(c) more than three months prior to the filing of the information disclosure statement. See 37 CFR 1.97(e)(2).

☐ See attached certification statement.

☐ The fee set forth in 37 CFR 1.17 (p) has been submitted herewith.

☒ A certification statement is not submitted herewith.

SIGNATURE

A signature of the applicant or representative is required in accordance with CFR 1.33, 10.18. Please see CFR 1.4(d) for the form of the signature.

Signature	/Matthew P. York/	Date (YYYY-MM-DD)	2024-03-19
Name/Print	Matthew P. York	Registration Number	66,470

This collection of information is required by 37 CFR 1.97 and 1.98. The information is required to obtain or retain a benefit by the public which is to file (and by the USPTO to process) an application. Confidentiality is governed by 35 U.S.C. 122 and 37 CFR 1.14. This collection is estimated to take 1 hour to complete, including gathering, preparing and submitting the completed application form to the USPTO. Time will vary depending upon the individual case. Any comments on the amount of time you require to complete this form and/or suggestions for reducing this burden, should be sent to the Chief Information Officer, U.S. Patent and Trademark Office, U.S. Department of Commerce, P.O. Box 1450, Alexandria, VA 22313-1450. DO NOT SEND FEES OR COMPLETED FORMS TO THIS ADDRESS. **SEND TO: Commissioner for Patents, P.O. Box 1450, Alexandria, VA 22313-1450.**

ALL REFERENCES CONSIDERED EXCEPT WHERE LINED THROUGH. /A.M.B./

Privacy Act Statement

The Privacy Act of 1974 (P.L. 93-579) requires that you be given certain information in connection with your submission of the attached form related to a patent application or patent. Accordingly, pursuant to the requirements of the Act, please be advised that: (1) the general authority for the collection of this information is 35 U.S.C. 2(b)(2); (2) furnishing of the information solicited is voluntary; and (3) the principal purpose for which the information is used by the U.S. Patent and Trademark Office is to process and/or examine your submission related to a patent application or patent. If you do not furnish the requested information, the U.S. Patent and Trademark Office may not be able to process and/or examine your submission, which may result in termination of proceedings or abandonment of the application or expiration of the patent.

The information provided by you in this form will be subject to the following routine uses:

1. The information on this form will be treated confidentially to the extent allowed under the Freedom of Information Act (5 U.S.C. 552) and the Privacy Act (5 U.S.C. 552a). Records from this system of records may be disclosed to the Department of Justice to determine whether the Freedom of Information Act requires disclosure of these record s.

2. A record from this system of records may be disclosed, as a routine use, in the course of presenting evidence to a court, magistrate, or administrative tribunal, including disclosures to opposing counsel in the course of settlement negotiations.

3. A record in this system of records may be disclosed, as a routine use, to a Member of Congress submitting a request involving an individual, to whom the record pertains, when the individual has requested assistance from the Member with respect to the subject matter of the record.

4. A record in this system of records may be disclosed, as a routine use, to a contractor of the Agency having need for the information in order to perform a contract. Recipients of information shall be required to comply with the requirements of the Privacy Act of 1974, as amended, pursuant to 5 U.S.C. 552a(m).

5. A record related to an International Application filed under the Patent Cooperation Treaty in this system of records may be disclosed, as a routine use, to the International Bureau of the World Intellectual Property Organization, pursuant to the Patent Cooperation Treaty.

6. A record in this system of records may be disclosed, as a routine use, to another federal agency for purposes of National Security review (35 U.S.C. 181) and for review pursuant to the Atomic Energy Act (42 U.S.C. 218(c)).

7. A record from this system of records may be disclosed, as a routine use, to the Administrator, General Services, or his/her designee, during an inspection of records conducted by GSA as part of that agency's responsibility to recommend improvements in records management practices and programs, under authority of 44 U.S.C. 2904 and 2906. Such disclosure shall be made in accordance with the GSA regulations governing inspection of records for this purpose, and any other relevant (i.e., GSA or Commerce) directive. Such disclosure shall not be used to make determinations about individuals.

8. A record from this system of records may be disclosed, as a routine use, to the public after either publication of the application pursuant to 35 U.S.C. 122(b) or issuance of a patent pursuant to 35 U.S.C. 151. Further, a record may be disclosed, subject to the limitations of 37 CFR 1.14, as a routine use, to the public if the record was filed in an application which became abandoned or in which the proceedings were terminated and which application is referenced by either a published application, an application open to public inspections or an issued patent.

9. A record from this system of records may be disclosed, as a routine use, to a Federal, State, or local law enforcement agency, if the USPTO becomes aware of a violation or potential violation of law or regulation.

ALL REFERENCES CONSIDERED EXCEPT WHERE LINED THROUGH. /A.M.B./

Bibliographic Data

Application No: 18/411,476

Foreign Priority claimed: ○ Yes ◉ No

35 USC 119 (a-d) conditions met: ☐ Yes ☐ No ☐ Met After Allowance

Verified and Acknowledged: /ABIGAIL BOCK/ Examiner's Signature | Initials

Title: SYSTEMS AND METHODS FOR IMPROVING SLEEP WITH THERAPEUTIC NASAL TREATMENT

FILING or 371(c) DATE	CLASS	GROUP ART UNIT	ATTORNEY DOCKET NO.
01/12/2024	606	3794	NEURE-008/03US 35242/151
RULE			

APPLICANTS

Neurent Medical Limited, Oranmore, IRELAND

INVENTORS

David Townley,

CONTINUING DATA

This application is a CON of 17225560 04/08/2021 PAT 11883091

17225560 has PRO of 63007584 04/09/2020

FOREIGN APPLICATIONS

IF REQUIRED, FOREIGN LICENSE GRANTED**

03/01/2024

** SMALL ENTITY **

STATE OR COUNTRY

ADDRESS

BROWN RUDNICK LLP
ONE FINANCIAL CENTER
BOSTON, MA 02111
UNITED STATES

FILING FEE RECEIVED

$2,400

PE2E SEARCH - Search History (Prior Art)

Ref #	Hits	Search Query	DBs	Default Operator	Plurals	British Equivalents	Time Stamp
L1	5	((("NEURENT") near3 ("MEDICAL") near3 ("LIMITED"))).AS,AANM.	(USPAT)	OR	ON	ON	2023/03/23 09:58 AM
L2	50	((("TOWNLEY") near3 ("David"))).INV.	(US-PGPUB; USPAT; USOCR; EPO; JPO; DERWENT)	OR	ON	ON	2023/03/23 10:00 AM
L3	7861	(A61B18/148 OR A61B2018/00327 OR A61B2018/00434 OR A61B2018/00583 OR A61B2018/1467).cpc.	(US-PGPUB; USPAT)	OR	ON	ON	2023/03/23 11:32 AM
L4	108	(US-20030016085-$ | US-20030212394-$ | US-20050080409-$ | US-20050171536-$ | US-20050240147-$ | US-20050283148-$ | US-20050288730-$ | US-20060036237-$ | US-20060106375-$ | US-20070031341-$ | US-20070093803-$ | US-20070129760-$ | US-20070299433-$ | US-20080154250-$ | US-20100204560-$ | US-20110264086-$ | US-20120078377-$ | US-20120323214-$ | US-20130018367-$ | US-20130165916-$ | US-20140018792-$ | US-20140025069-$ | US-20140114233-$ | US-20150006606-$ | US-20150018818-$ | US-20150031946-$ | US-20150066006-$ | US-20150119881-$ | US-20150164571-$ | US-20150257754-$ | US-20150265812-$ | US-20150289750-$ | US-20150297282-$ | US-20160015450-$ | US-20160045277-$ | US-20160120598-$ | US-20160287315-$ | US-20160331459-$ | US-20160354136-$ |	(US-PGPUB; USPAT)	OR	ON	ON	2023/03/30 11:45 AM

Aerin Exhibit 1011, Page 77 of 2183
Aerin Medical Inc. v. Neurent Medical Ltd.
IPR2025-01126

		US-20170095252-$ | US-20170095288-$ | US-20170151014-$ | US-20170209199-$ | US-20170231474-$ | US-20170231651-$ | US-20170245924-$ | US-20170252089-$ | US-20170252100-$ | US-20170266422-$ | US-20180042471-$ | US-20180078327-$ | US-20180103994-$ | US-20180125560-$ | US-20180133460-$ | US-20180153375-$ | US-20180177542-$ | US-20180177546-$ | US-20180185085-$ | US-20180228533-$ | US-20180317993-$ | US-20180317997-$ | US-20180344378-$ | US-20180344411-$ | US-20190076185-$ | US-20190083157-$ | US-20190175242-$ | US-20190231409-$ | US-20190231429-$ | US-20190239953-$ | US-20190239954-$ | US-20190239955-$ | US-20190239956-$ | US-20190239957-$ | US-20190282289-$ | US-10028780-$ | US-10028781-$ | US-10155108-$ | US-10159538-$ | US-10201687-$ | US-10238861-$ | US-10252048-$ | US-10265115-$ | US-10307200-$ | US-10335221-$ | US-10363094-$ | US-10376300-$ | US-10398489-$ | US-10448985-$ | US-10456185-$ | US-10456186-$ | US-10485603-$ | US-10588682-$ | US-10687883-$ | US-20030123-$ | US-20031113-$ | US-20050414-$ | US-20050804-$ | US-					

		20051027-$ | US- 20051222-$ | US- 20051229-$ | US- 20060216-$ | US- 20060518-$ | US- 20070208-$ | US- 20070426-$ | US- 20070607-$ | US- 20071227-$ | US- 20080626-$ | US- 20100812-$ | US- 20111027-$ | US- 20120329-$ | US- 20121220-$ | US- 20130117-$ | US- 20130627-$ | US- 20140116-$ | US- 20140123-$ | US- 20140424-$ | US- 20150101-$ | US- 20150115-$ | US- 20150129-$ | US- 20150305-$ | US- 20150430-$ | US- 20150618-$ | US- 20150917-$ | US- 20150924-$ | US- 20151015-$ | US- 20151022-$ | US- 20160121-$ | US- 20160218-$ | US- 20160505-$ | US- 20161006-$ | US- 20161117-$ | US- 20161208-$ | US- 20170406-$ | US- 20170601-$ | US- 20170727-$ | US- 20170817-$ | US- 20170831-$ | US- 20170907-$ | US- 20170921-$ | US- 20180215-$ | US- 20180322-$ | US- 20180419-$ | US- 20180510-$ | US- 20180517-$ | US- 20180607-$ | US- 20180628-$ | US- 20180705-$ | US- 20180816-$ | US- 20181108-$ | US- 20181206-$ | US- 20190314-$ | US- 20190321-$ | US- 20190613-$ | US- 20190801-$ | US- 20190808-$ | US-					

		20190919-$ | US-2929852-$ | US-5184625-$ | US-5697536-$ | US-5697882-$ | US-5746224-$ | US-5836947-$ | US-5843026-$ | US-6063079-$ | US-6106518-$ | US-6139527-$ | US-6352533-$ | US-6529756-$ | US-6595988-$ | US-6626899-$ | US-6746474-$).DID.					
L5	25	(WO-2007008954-$ | WO-2015013252-$ | WO-2015048806-$ | WO-2016134264-$ | WO-2016183337-$ | WO-2018087601-$ | EP-2929852-$).DID.	(US-PGPUB; USPAT; USOCR; FIT (AU, AP, AT, BE, BG, BR, BY, CA, CH, CN, CS, CU, CZ, DD, DE, DK, EA, EE, EP, ES, FI, FR, GB, HR, HU, ID, IE, IL, IS, IT, JP, KR, LT, LU, LV, MA, OA, RU, SU, WO, MC, MD, MY, NL, NO, NZ, PH, PL, PT, RO, RS, SE, SG, SI, SK, TH, TN, TR, TW, UA, VN); FPRS; EPO; JPO; DERWENT; IBM_TDB)	OR	ON	ON	2023/03/30 11:46 AM
L6	47	(US-20020072742-$ | US-20020177765-$ | US-20050187546-$ | US-20100168737-$ | US-20110152855-$ | US-20110238057-$ | US-20120259326-$ | US-20120323227-$ | US-20130253387-$ | US-20130253389-$ | US-20130282084-$ | US-20140005706-$ | US-20140074091-$ | US-20140180196-$ | US-20140276752-$ | US-20140303665-$ | US-20150112321-$ | US-20150150624-$ | US-20150182282-$ | US-20150257824-$ | US-20150257825-$ | US-20150351836-$ | US-20160128767-$ | US-20170150104-$ | US-20170215950-$ |	(US-PGPUB; USPAT)	OR	ON	ON	2023/03/30 11:50 AM

		US-20170215952-$ | US-20170312021-$ | US-20180049802-$ | US-20180161577-$ | US-20180168503-$ | US-20180169414-$ | US-20190069949-$ | US-20190223944-$ | US-20200078134-$ | US-20200107882-$ | US-20200129223-$ | US-20200289185-$ | US-20210315627-$ | US-20020613-$ | US-20021128-$ | US-20050825-$ | US-20100701-$ | US-20110623-$ | US-20110929-$ | US-20121011-$ | US-20121220-$ | US-20130926-$ | US-20131024-$ | US-20140102-$ | US-20140313-$ | US-20140626-$ | US-20140918-$ | US-20141009-$ | US-20150423-$ | US-20150604-$ | US-20150702-$ | US-20150917-$ | US-20151210-$ | US-20160512-$ | US-20170119-$ | US-20170803-$ | US-20171102-$ | US-20180222-$ | US-20180614-$ | US-20180621-$ | US-20190307-$ | US-20190725-$ | US-20200312-$ | US-20200409-$ | US-20200430-$ | US-20200917-$ | US-20211014-$ | US-5395383-$ | US-5456662-$ | US-6332880-$ | US-6652548-$ | US-7285119-$ | US-8372068-$ | US-9179973-$ | US-9498278-$ | US-9649156-$).DID.					
L7	25	(WO-0117450-$ | JP-	(US-PGPUB; USPAT;	OR	ON	ON	2023/03/30

		2007537784-$ | WO-2009154456-$ | WO-2021205230-$ | WO-2021205231-$ | WO-2021260435-$ | WO-9410921-$).DID.	USOCR; FIT (AU, AP, AT, BE, BG, BR, BY, CA, CH, CN, CS, CU, CZ, DD, DE, DK, EA, EE, EP, ES, FI, FR, GB, HR, HU, ID, IE, IL, IS, IT, JP, KR, LT, LU, LV, MA, OA, RU, SU, WO, MC, MD, MY, NL, NO, NZ, PH, PL, PT, RO, RS, SE, SG, SI, SK, TH, TN, TR, TW, UA, VN); FPRS; EPO; JPO; DERWENT; IBM_TDB)				11:50 AM
L8	29	(US-20050171582-$ | US-20050171583-$ | US-20060100620-$ | US-20080287908-$ | US-20090198216-$ | US-20090318914-$ | US-20100049187-$ | US-20100057048-$ | US-20100305715-$ | US-20120191003-$ | US-20120323232-$ | US-20130123778-$ | US-20130158475-$ | US-20130172877-$ | US-20140100557-$ | US-20140200581-$ | US-20160250474-$ | US-20180063678-$ | US-20190314620-$ | US-10695557-$ | US-11241271-$ | US-11304746-$ | US-20050804-$ | US-20060511-$ | US-20081120-$ | US-20090806-$ | US-20091224-$ | US-20100225-$ | US-20100304-$ | US-20101202-$ | US-20120726-$ | US-20121220-$ | US-20130516-$ | US-20130620-$ | US-20130704-$ | US-20140410-$ | US-20140717-$ | US-20160901-$ | US-20180301-$ | US-20191017-$ | US-3987795-$ | US-5823197-$ | US-	(US-PGPUB; USPAT)	OR	ON	ON	2023/03/30 11:52 AM

		5827277-$ | US-6053172-$ | US-7195629-$ | US-7524318-$ | US-8747401-$).DID.					
L9	8	(JP-2009538641-$ | JP-2012143573-$ | JP-2015507964-$).DID.	(US-PGPUB; USPAT; USOCR; FIT (AU, AP, AT, BE, BG, BR, BY, CA, CH, CN, CS, CU, CZ, DD, DE, DK, EA, EE, EP, ES, FI, FR, GB, HR, HU, ID, IE, IL, IS, IT, JP, KR, LT, LU, LV, MA, OA, RU, SU, WO, MC, MD, MY, NL, NO, NZ, PH, PL, PT, RO, RS, SE, SG, SI, SK, TH, TN, TR, TW, UA, VN); FPRS; EPO; JPO; DERWENT; IBM_TDB)	OR	ON	ON	2023/03/30 11:52 AM
L10	188	((US-10687883-B2 OR US-10588682-B2 OR US-10456185-B2 OR US-10363094-B2 OR US-10252048-B2 OR US-10201687-B2 OR US-10155108-B2 OR US-6746474-B2 OR US-6626899-B2 OR US-6595988-B2 OR US-6529756-B1 OR US-6352533-B1 OR US-6139527-A OR US-6106518-A OR US-6063079-A OR US-5843026-A OR US-5836947-A OR US-5746224-A OR US-5697536-A OR US-5697882-A OR US-5184625-A OR US-2929852-A OR US-9649156-B2 OR US-9498278-B2 OR US-9179973-B2 OR US-8372068-B2 OR US-7285119-B2 OR US-6652548-B2 OR US-6332880-B1 OR US-5456662-A OR US-5395383-A OR US-11304746-B2 OR US-11241271-B2 OR US-10695557-B1 OR US-8747401-B2 OR US-7524318-B2 OR US-	(US-PGPUB; USPAT; USOCR; FIT (AU, AP, AT, BE, BG, BR, BY, CA, CH, CN, CS, CU, CZ, DD, DE, DK, EA, EE, EP, ES, FI, FR, GB, HR, HU, ID, IE, IL, IS, IT, JP, KR, LT, LU, LV, MA, OA, RU, SU, WO, MC, MD, MY, NL, NO, NZ, PH, PL, PT, RO, RS, SE, SG, SI, SK, TH, TN, TR, TW, UA, VN); FPRS; EPO; JPO; DERWENT; IBM_TDB)	OR	ON	ON	2023/03/31 11:00 AM

Aerin Exhibit 1011, Page 83 of 2183
Aerin Medical Inc. v. Neurent Medical Ltd.
IPR2025-01126

		7195629-B2 OR US-6053172-A OR US-5827277-A OR US-5823197-A OR US-3987795-A).did. AND USPT.dbnm.) OR ((US-20190282289-A1 OR US-20190076185-A1 OR US-20180344411-A1 OR US-20180344378-A1 OR US-20180317997-A1 OR US-20180177546-A1 OR US-20180133460-A1 OR US-20180125560-A1 OR US-20180103994-A1 OR US-20180042471-A1 OR US-20170266422-A1 OR US-20170252089-A1 OR US-20170245924-A1 OR US-20170231651-A1 OR US-20170231474-A1 OR US-20170151014-A1 OR US-20170095252-A1 OR US-20160331459-A1 OR US-20160120598-A1 OR US-20160045277-A1 OR US-20160015450-A1 OR US-20150297282-A1 OR US-20150289750-A1 OR US-20150265812-A1 OR US-20150257754-A1 OR US-20150164571-A1 OR US-20150119881-A1 OR US-20150066006-A1 OR US-20150031946-A1 OR US-20150018818-A1 OR US-20150006606-A1 OR US-20140114233-A1 OR US-20140025069-A1 OR US-20140018792-A1 OR US-20130165916-A1 OR US-20130018367-A1 OR US-20120323214-A1 OR US-20120078377-A1 OR US-20110264086-A1 OR US-					

		20100204560-A1 OR US-20070299433-A1 OR US-20070129760-A1 OR US-20070093803-A1 OR US-20070031341-A1 OR US-20060106375-A1 OR US-20060036237-A1 OR US-20050288730-A1 OR US-20050283148-A1 OR US-20050240147-A1 OR US-20050080409-A1 OR US-20030212394-A1 OR US-20030016085-A1 OR US-20210315627-A1 OR US-20200289185-A1 OR US-20200129223-A1 OR US-20200107882-A1 OR US-20200078134-A1 OR US-20190223944-A1 OR US-20190069949-A1 OR US-20180161577-A1 OR US-20180049802-A1 OR US-20170312021-A1 OR US-20170215952-A1 OR US-20170215950-A1 OR US-20170150104-A1 OR US-20160128767-A1 OR US-20150351836-A1 OR US-20150257824-A1 OR US-20150257825-A1 OR US-20150182282-A1 OR US-20150150624-A1 OR US-20150112321-A1 OR US-20140303665-A1 OR US-20140276752-A1 OR US-20140180196-A1 OR US-20140074091-A1 OR US-20140005706-A1 OR US-20130282084-A1 OR US-20130253389-A1 OR US-20130253387-A1 OR US-20120323227-A1 OR US-20120259326-A1 OR US-20110238057-A1					

		OR US-20110152855-A1 OR US-20100168737-A1 OR US-20050187546-A1 OR US-20020177765-A1 OR US-20020072742-A1 OR US-20190314620-A1 OR US-20180063678-A1 OR US-20160250474-A1 OR US-20140200581-A1 OR US-20140100557-A1 OR US-20130172877-A1 OR US-20130158475-A1 OR US-20130123778-A1 OR US-20120323232-A1 OR US-20120191003-A1 OR US-20100305715-A1 OR US-20100057048-A1 OR US-20100049187-A1 OR US-20090318914-A1 OR US-20090198216-A1 OR US-20080287908-A1 OR US-20060100620-A1 OR US-20050171582-A1 OR US-20050171583-A1).did. AND PGPB.dbnm.) OR ((US-20180133460-A1 OR US-20160331459-A1 OR US-20160242667-A1 OR WO-2015048806-A2 OR WO-2015013252-A1 OR WO-2011127216-A2 OR WO-2007008954-A2 OR WO-2021260435-A1 OR WO-2021205231-A1 OR WO-2021205230-A1 OR WO-2009154456-A1 OR WO-2007037554-A1 OR US-20050240147-A1 OR WO-0117450-A1 OR WO-9410921-A1 OR US-20120157968-A1 OR WO-2007137235-A2 OR US-20050288730-A1).did. AND DWPI.dbnm.) OR					

Aerin Exhibit 1011, Page 86 of 2183
Aerin Medical Inc. v. Neurent Medical Ltd.
IPR2025-01126

		((WO-2018087601-A1 OR WO-2016183337-A2 OR WO-2016134264-A1 OR EP-2929852-A1 OR WO-2015048806-A2 OR WO-2015013252-A1 OR WO-2007008954-A2 OR WO-2021260435-A1 OR WO-2021205230-A1 OR WO-2021205231-A1 OR WO-2009154456-A1 OR JP-2007537784-A5 OR JP-2007537784-A OR WO-0117450-A1 OR WO-9410921-A1 OR JP-2015507964-A OR JP-2009538641-A5 OR JP-2009538641-A).did. AND FTDB.dbnm.) OR ((WO-2007008954-A2 OR WO-2009154456-A1 OR WO-9410921-A1).did. AND EPAB.dbnm.) OR ((JP-2012143573-A).did. AND JPAB.dbnm.)					
L11	2	L10 AND (cryoablation) AND (nasal) AND (radiofrequency) AND (retract$4)	(US-PGPUB; USPAT)	OR	ON	ON	2023/04/03 09:14 AM
L12	0	L10 AND (cryoablation) AND (nasal) AND (radiofrequency) AND ((retract$4) WITH (effector))	(US-PGPUB; USPAT)	OR	ON	ON	2023/04/03 09:20 AM
L13	0	"L13" AND (cryoablation) AND (nasal) AND (radiofrequency) AND ((retract$4) WITH (effector))	(US-PGPUB; USPAT)	OR	ON	ON	2023/04/03 09:20 AM
L14	0	L3 AND (cryoablation) AND (nasal) AND (radiofrequency) AND ((retract$4) WITH (effector))	(US-PGPUB; USPAT)	OR	ON	ON	2023/04/03 09:20 AM
L15	17	L3and (cryoablation) AND (nasal) AND (radiofrequency) AND ((retract$4) WITH (effector))	(US-PGPUB; USPAT)	OR	ON	ON	2023/04/03 09:20 AM
L16	9	L3 AND (cryoablation)	(US-PGPUB; USPAT)	OR	ON	ON	2023/04/03

		AND (nasal) AND (radiofrequency) AND ((retract$4 OR collaps$4) WITH (effector OR element OR electrode))					09:21 AM
L18	2	15/153217.app.	(US-PGPUB; USPAT)	OR	ON	ON	2023/04/03 09:27 AM
L19	58	L10 AND (thrombus OR clot OR cauteriz$4)	(US-PGPUB; USPAT)	OR	ON	ON	2023/04/03 10:25 AM
L20	27	L10 AND (thrombus OR clot OR cauteriz$4) AND (nasal WITH (treat$4 OR modulat$4 OR ablat$4))	(US-PGPUB; USPAT)	OR	ON	ON	2023/04/03 10:29 AM
L21	3	L10 AND (thrombus OR clot) AND (nasal WITH (treat$4 OR modulat$4 OR ablat$4))	(US-PGPUB; USPAT)	OR	ON	ON	2023/04/03 10:32 AM
L22	61	L3 AND (thrombus OR clot) AND (nasal WITH (treat$4 OR modulat$4 OR ablat$4))	(US-PGPUB; USPAT)	OR	ON	ON	2023/04/03 11:02 AM
L23	5	L10 AND (volumetric adj2 flow)	(US-PGPUB; USPAT)	OR	ON	ON	2023/04/03 11:20 AM
L24	1	L10 AND (mucosal ADJ engorge$4)	(US-PGPUB; USPAT)	OR	ON	ON	2023/04/03 11:21 AM
L25	31	L3 AND (mucosal ADJ engorge$4)	(US-PGPUB; USPAT)	OR	ON	ON	2023/04/03 11:22 AM
L26	31	L3 AND (mucosal ADJ (engorge$4 OR enlarge$4 OR growth OR large OR fill$4))	(US-PGPUB; USPAT)	OR	ON	ON	2023/04/03 11:48 AM
L27	2	L3 AND (mucosal ADJ (engorge$4 OR enlarge$4 OR growth OR large OR fill$4)) WITH (decrease OR lower OR abate)	(US-PGPUB; USPAT)	OR	ON	ON	2023/04/03 11:48 AM
L28	89	L10 AND ((deploy$4 OR expand$4 OR inflat$4) WITH (proximal OR distal))	(US-PGPUB; USPAT)	OR	ON	ON	2023/04/04 09:55 AM
L29	25	L28 AND (distal WITH segment) AND (proximal WITH segment)	(US-PGPUB; USPAT)	OR	ON	ON	2023/04/04 09:58 AM
L30	5	L29 AND (middle WITH turbinate)	(US-PGPUB; USPAT)	OR	ON	ON	2023/04/04 10:00 AM
L31	0	L13 AND (cryoablation) AND (nasal) AND (radiofrequency) AND ((retract$4) WITH	(US-PGPUB; USPAT)	OR	ON	ON	2023/04/04 03:35 PM

		(effector))					
L32	8	L3 AND (cryoablation) AND (nasal) AND (radiofrequency) AND (effector)	(US-PGPUB; USPAT)	OR	ON	ON	2023/04/04 03:35 PM
L33	45	L3 AND (cryoablation) AND (nasal) AND (radiofrequency) AND (effector OR electrode OR wire)	(US-PGPUB; USPAT)	OR	ON	ON	2023/04/04 03:36 PM
L34	0	L3 AND (cryoablation) AND (nasal) AND (radiofrequency) AND (effector) AND (foramina OR microforamina)	(US-PGPUB; USPAT)	OR	ON	ON	2023/04/06 09:16 AM
L35	0	L3 AND (cryoablation) AND (nasal) AND (radiofrequency) AND (effector) AND (foramine OR microforamine)	(US-PGPUB; USPAT)	OR	ON	ON	2023/04/06 09:16 AM
L36	6	L3 AND (cryoablation) AND (nasal) AND (radiofrequency) AND (effector) AND (foramen OR microforamen)	(US-PGPUB; USPAT)	OR	ON	ON	2023/04/06 09:17 AM
L37	151	L1 OR L2	(US-PGPUB; USPAT; USOCR; FIT (AU, AP, AT, BE, BG, BR, BY, CA, CH, CN, CS, CU, CZ, DD, DE, DK, EA, EE, EP, ES, FI, FR, GB, HR, HU, ID, IE, IL, IS, IT, JP, KR, LT, LU, LV, MA, OA, RU, SU, WO, MC, MD, MY, NL, NO, NZ, PH, PL, PT, RO, RS, SE, SG, SI, SK, TH, TN, TR, TW, UA, VN); FPRS; EPO; JPO; DERWENT; IBM_TDB)	OR	ON	ON	2023/07/27 10:35 AM
L38	30	L37 AND (nas$4) AND (electrode) AND (multi-segment)	(US-PGPUB; USPAT)	OR	ON	ON	2023/07/27 10:35 AM
L40	30	L37 AND (nas$4) AND (electrode) AND (multi-segment) AND (retract$4)	(US-PGPUB; USPAT)	OR	ON	ON	2023/08/09 10:13 AM
L41	9	L37 AND (nas$4) AND (electrode) AND (multi-segment) AND (retract$4) AND (concave)	(US-PGPUB; USPAT)	OR	ON	ON	2023/08/09 10:14 AM

L42	25	(nas$4 WITH multi-seg$4) AND L3	(US-PGPUB; USPAT)	OR	ON	ON	2023/08/10 11:55 AM
L43	2	"20160331459".did. OR "20200179683".did.	(US-PGPUB; USPAT)	OR	ON	ON	2023/08/14 10:11 AM
L44	1	L43 AND ((((((("NEURENT") near3 ("MEDICAL") near3 ("LIMITED"))).AS,AAN M.) OR ((((("TOWNLEY") near3 ("David"))).INV.)) AND (nas$4) AND (electrode) AND (multi-segment) AND (retract$4) AND (concave))	(US-PGPUB; USPAT)	OR	ON	ON	2023/08/14 10:12 AM
L45	1	L43 AND ((((((("NEURENT") near3 ("MEDICAL") near3 ("LIMITED"))).AS,AAN M.) OR ((((("TOWNLEY") near3 ("David"))).INV.)) AND (nas$4) AND (electrode) AND (retract$4) AND (concave))	(US-PGPUB; USPAT)	OR	ON	ON	2023/08/14 10:12 AM
L46	2	L43 AND (flex$4)	(US-PGPUB; USPAT)	OR	ON	ON	2023/08/14 10:12 AM
L47	189	((US-10687883-B2 OR US-10588682-B2 OR US-10456185-B2 OR US-10363094-B2 OR US-10252048-B2 OR US-10201687-B2 OR US-10155108-B2 OR US-6746474-B2 OR US-6626899-B2 OR US-6595988-B2 OR US-6529756-B1 OR US-6352533-B1 OR US-6139527-A OR US-6106518-A OR US-6063079-A OR US-5843026-A OR US-5836947-A OR US-5746224-A OR US-5697536-A OR US-5697882-A OR US-5184625-A OR US-2929852-A OR US-9649156-B2 OR US-9498278-B2 OR US-9179973-B2 OR US-8372068-B2 OR US-7285119-B2 OR US-	(US-PGPUB; USPAT; USOCR; FIT (AU, AP, AT, BE, BG, BR, BY, CA, CH, CN, CS, CU, CZ, DD, DE, DK, EA, EE, EP, ES, FI, FR, GB, HR, HU, ID, IE, IL, IS, IT, JP, KR, LT, LU, LV, MA, OA, RU, SU, WO, MC, MD, MY, NL, NO, NZ, PH, PL, PT, RO, RS, SE, SG, SI, SK, TH, TN, TR, TW, UA, VN); FPRS; EPO; JPO; DERWENT; IBM_TDB)	OR	ON	ON	2023/08/14 10:36 AM

		6652548-B2 OR US-6332880-B1 OR US-5456662-A OR US-5395383-A OR US-11304746-B2 OR US-11241271-B2 OR US-10695557-B1 OR US-8747401-B2 OR US-7524318-B2 OR US-7195629-B2 OR US-6053172-A OR US-5827277-A OR US-5823197-A OR US-3987795-A).did. AND USPT.dbnm.) OR ((US-20190282289-A1 OR US-20190076185-A1 OR US-20180344411-A1 OR US-20180344378-A1 OR US-20180317997-A1 OR US-20180177546-A1 OR US-20180133460-A1 OR US-20180125560-A1 OR US-20180103994-A1 OR US-20180042471-A1 OR US-20170266422-A1 OR US-20170252089-A1 OR US-20170245924-A1 OR US-20170231651-A1 OR US-20170231474-A1 OR US-20170151014-A1 OR US-20170095252-A1 OR US-20160331459-A1 OR US-20160120598-A1 OR US-20160045277-A1 OR US-20160015450-A1 OR US-20150297282-A1 OR US-20150289750-A1 OR US-20150265812-A1 OR US-20150257754-A1 OR US-20150164571-A1 OR US-20150119881-A1 OR US-20150066006-A1 OR US-20150031946-A1 OR US-20150018818-A1 OR US-20150006606-A1 OR US-20140114233-A1 OR US-20140025069-					

		A1 OR US-20140018792-A1 OR US-20130165916-A1 OR US-20130018367-A1 OR US-20120323214-A1 OR US-20120078377-A1 OR US-20110264086-A1 OR US-20100204560-A1 OR US-20070299433-A1 OR US-20070129760-A1 OR US-20070093803-A1 OR US-20070031341-A1 OR US-20060106375-A1 OR US-20060036237-A1 OR US-20050288730-A1 OR US-20050283148-A1 OR US-20050240147-A1 OR US-20050080409-A1 OR US-20030212394-A1 OR US-20030016085-A1 OR US-20210315627-A1 OR US-20200289185-A1 OR US-20200129223-A1 OR US-20200107882-A1 OR US-20200078134-A1 OR US-20190223944-A1 OR US-20190069949-A1 OR US-20180161577-A1 OR US-20180049802-A1 OR US-20170312021-A1 OR US-20170215952-A1 OR US-20170215950-A1 OR US-20170150104-A1 OR US-20160128767-A1 OR US-20150351836-A1 OR US-20150257824-A1 OR US-20150257825-A1 OR US-20150182282-A1 OR US-20150150624-A1 OR US-20150112321-A1 OR US-20140303665-A1 OR US-20140276752-A1 OR US-20140180196-A1 OR US-20140074091-A1 OR					

		US-20140005706-A1 OR US-20130282084-A1 OR US-20130253389-A1 OR US-20130253387-A1 OR US-20120323227-A1 OR US-20120259326-A1 OR US-20110238057-A1 OR US-20110152855-A1 OR US-20100168737-A1 OR US-20050187546-A1 OR US-20020177765-A1 OR US-20020072742-A1 OR US-20190314620-A1 OR US-20180063678-A1 OR US-20160250474-A1 OR US-20140200581-A1 OR US-20140100557-A1 OR US-20130172877-A1 OR US-20130158475-A1 OR US-20130123778-A1 OR US-20120323232-A1 OR US-20120191003-A1 OR US-20100305715-A1 OR US-20100057048-A1 OR US-20100049187-A1 OR US-20090318914-A1 OR US-20090198216-A1 OR US-20080287908-A1 OR US-20060100620-A1 OR US-20050171582-A1 OR US-20050171583-A1 OR US-20200179683-A1).did. AND PGPB.dbnm.) OR ((US-20180133460-A1 OR US-20160331459-A1 OR US-20160242667-A1 OR WO-2015048806-A2 OR WO-2015013252-A1 OR WO-2011127216-A2 OR WO-2007008954-A2 OR WO-2021260435-A1 OR WO-2021205231-A1 OR WO-2021205230-A1 OR WO-2009154456-A1					

		OR WO-2007037554-A1 OR US-20050240147-A1 OR WO-0117450-A1 OR WO-9410921-A1 OR US-20120157968-A1 OR WO-2007137235-A2 OR US-20050288730-A1).did. AND DWPI.dbnm.) OR ((WO-2018087601-A1 OR WO-2016183337-A2 OR WO-2016134264-A1 OR EP-2929852-A1 OR WO-2015048806-A2 OR WO-2015013252-A1 OR WO-2007008954-A2 OR WO-2021260435-A1 OR WO-2021205230-A1 OR WO-2021205231-A1 OR WO-2009154456-A1 OR JP-2007537784-A5 OR JP-2007537784-A OR WO-0117450-A1 OR WO-9410921-A1 OR JP-2015507964-A OR JP-2009538641-A5 OR JP-2009538641-A).did. AND FTDB.dbnm.) OR ((WO-2007008954-A2 OR WO-2009154456-A1 OR WO-9410921-A1).did. AND EPAB.dbnm.) OR ((JP-2012143573-A).did. AND JPAB.dbnm.)					
L48	36	L47 AND ((first WITH (segment OR section OR portion)) WITH (electrode)) AND (second WITH (segment OR section OR portion) WITH electrode)	(US-PGPUB; USPAT)	OR	ON	ON	2023/08/14 10:37 AM
L49	5	L48 AND ((first WITH (segment OR section OR portion)) WITH (second WITH (segment OR section OR portion)) WITH (apart OR distance OR space))	(US-PGPUB; USPAT)	OR	ON	ON	2023/08/14 10:38 AM
L50	1	"11666378".pn.	(US-PGPUB; USPAT)	OR	ON	ON	2023/08/14

							10:43 AM
L51	6321	(A61B18/148 A61B2018/00327 A61B2018/00434 A61B2018/00583 A61B2018/1497).CPC.	(US-PGPUB; USPAT)	OR	ON	ON	2024/03/11 01:38 PM
L52	10	((("Neurent") near3 ("Medical") near3 ("Limited"))).AS,AANM.	(USPAT)	OR	ON	ON	2024/03/11 01:39 PM
L53	1	"20160331459".did.	(US-PGPUB; USPAT)	OR	ON	ON	2024/03/26 12:11 PM
L54	190	((US-10687883-B2 OR US-10588682-B2 OR US-10456185-B2 OR US-10363094-B2 OR US-10252048-B2 OR US-10201687-B2 OR US-10155108-B2 OR US-6746474-B2 OR US-6626899-B2 OR US-6595988-B2 OR US-6529756-B1 OR US-6352533-B1 OR US-6139527-A OR US-6106518-A OR US-6063079-A OR US-5843026-A OR US-5836947-A OR US-5746224-A OR US-5697536-A OR US-5697882-A OR US-5184625-A OR US-2929852-A OR US-9649156-B2 OR US-9498278-B2 OR US-9179973-B2 OR US-8372068-B2 OR US-7285119-B2 OR US-6652548-B2 OR US-6332880-B1 OR US-5456662-A OR US-5395383-A OR US-11304746-B2 OR US-11241271-B2 OR US-10695557-B1 OR US-8747401-B2 OR US-7524318-B2 OR US-7195629-B2 OR US-6053172-A OR US-5827277-A OR US-5823197-A OR US-3987795-A OR US-11666378-B2).did. AND USPT.dbnm.) OR ((US-20190282289-A1 OR US-20190076185-A1	(US-PGPUB; USPAT; USOCR; FIT (AU, AP, AT, BE, BG, BR, BY, CA, CH, CN, CS, CU, CZ, DD, DE, DK, EA, EE, EP, ES, FI, FR, GB, HR, HU, ID, IE, IL, IS, IT, JP, KR, LT, LU, LV, MA, OA, RU, SU, WO, MC, MD, MY, NL, NO, NZ, PH, PL, PT, RO, RS, SE, SG, SI, SK, TH, TN, TR, TW, UA, VN); FPRS; EPO; JPO; DERWENT; IBM_TDB)	OR	ON	ON	2024/03/26 12:59 PM

		OR US-20180344411-A1 OR US-20180344378-A1 OR US-20180317997-A1 OR US-20180177546-A1 OR US-20180133460-A1 OR US-20180125560-A1 OR US-20180103994-A1 OR US-20180042471-A1 OR US-20170266422-A1 OR US-20170252089-A1 OR US-20170245924-A1 OR US-20170231651-A1 OR US-20170231474-A1 OR US-20170151014-A1 OR US-20170095252-A1 OR US-20160331459-A1 OR US-20160120598-A1 OR US-20160045277-A1 OR US-20160015450-A1 OR US-20150297282-A1 OR US-20150289750-A1 OR US-20150265812-A1 OR US-20150257754-A1 OR US-20150164571-A1 OR US-20150119881-A1 OR US-20150066006-A1 OR US-20150031946-A1 OR US-20150018818-A1 OR US-20150006606-A1 OR US-20140114233-A1 OR US-20140025069-A1 OR US-20140018792-A1 OR US-20130165916-A1 OR US-20130018367-A1 OR US-20120323214-A1 OR US-20120078377-A1 OR US-20110264086-A1 OR US-20100204560-A1 OR US-20070299433-A1 OR US-20070129760-A1 OR US-20070093803-A1 OR US-20070031341-A1 OR US-20060106375-A1 OR US-					

		20060036237-A1 OR US-20050288730-A1 OR US-20050283148-A1 OR US-20050240147-A1 OR US-20050080409-A1 OR US-20030212394-A1 OR US-20030016085-A1 OR US-20210315627-A1 OR US-20200289185-A1 OR US-20200129223-A1 OR US-20200107882-A1 OR US-20200078134-A1 OR US-20190223944-A1 OR US-20190069949-A1 OR US-20180161577-A1 OR US-20180049802-A1 OR US-20170312021-A1 OR US-20170215952-A1 OR US-20170215950-A1 OR US-20170150104-A1 OR US-20160128767-A1 OR US-20150351836-A1 OR US-20150257824-A1 OR US-20150257825-A1 OR US-20150182282-A1 OR US-20150150624-A1 OR US-20150112321-A1 OR US-20140303665-A1 OR US-20140276752-A1 OR US-20140180196-A1 OR US-20140074091-A1 OR US-20140005706-A1 OR US-20130282084-A1 OR US-20130253389-A1 OR US-20130253387-A1 OR US-20120323227-A1 OR US-20120259326-A1 OR US-20110238057-A1 OR US-20110152855-A1 OR US-20100168737-A1 OR US-20050187546-A1 OR US-20020177765-A1 OR US-20020072742-A1 OR US-20190314620-A1					

		OR US-20180063678-A1 OR US-20160250474-A1 OR US-20140200581-A1 OR US-20140100557-A1 OR US-20130172877-A1 OR US-20130158475-A1 OR US-20130123778-A1 OR US-20120323232-A1 OR US-20120191003-A1 OR US-20100305715-A1 OR US-20100057048-A1 OR US-20100049187-A1 OR US-20090318914-A1 OR US-20090198216-A1 OR US-20080287908-A1 OR US-20060100620-A1 OR US-20050171582-A1 OR US-20050171583-A1 OR US-20200179683-A1).did. AND PGPB.dbnm.) OR ((US-20180133460-A1 OR US-20160331459-A1 OR US-20160242667-A1 OR WO-2015048806-A2 OR WO-2015013252-A1 OR WO-2011127216-A2 OR WO-2007008954-A2 OR WO-2021260435-A1 OR WO-2021205231-A1 OR WO-2021205230-A1 OR WO-2009154456-A1 OR WO-2007037554-A1 OR US-20050240147-A1 OR WO-0117450-A1 OR WO-9410921-A1 OR US-20120157968-A1 OR WO-2007137235-A2 OR US-20050288730-A1).did. AND DWPI.dbnm.) OR ((WO-2018087601-A1 OR WO-2016183337-A2 OR WO-2016134264-A1 OR EP-2929852-A1 OR WO-2015048806-A2 OR WO-2015013252-					

		A1 OR WO-2007008954-A2 OR WO-2021260435-A1 OR WO-2021205230-A1 OR WO-2021205231-A1 OR WO-2009154456-A1 OR JP-2007537784-A5 OR JP-2007537784-A OR WO-0117450-A1 OR WO-9410921-A1 OR JP-2015507964-A OR JP-2009538641-A5 OR JP-2009538641-A).did. AND FTDB.dbnm.) OR ((WO-2007008954-A2 OR WO-2009154456-A1 OR WO-9410921-A1).did. AND EPAB.dbnm.) OR ((JP-2012143573-A).did. AND JPAB.dbnm.)					
L55	11	L54 AND (elapse$4 near2 time)	(US-PGPUB; USPAT)	OR	ON	ON	2024/03/26 12:59 PM
L56	154	(US-20020068930-$ | US-20020072742-$ | US-20020177765-$ | US-20030016085-$ | US-20030212394-$ | US-20050080409-$ | US-20050171536-$ | US-20050171574-$ | US-20050171582-$ | US-20050171583-$ | US-20050187546-$ | US-20050240147-$ | US-20050283148-$ | US-20050288730-$ | US-20060036237-$ | US-20060055942-$ | US-20060100620-$ | US-20060106375-$ | US-20060116599-$ | US-20060149226-$ | US-20060247683-$ | US-20070006975-$ | US-20070031341-$ | US-20070032786-$ | US-20070083194-$ | US-20070083195-$ | US-20070093803-$ | US-20070129760-$ | US-20070173760-$ | US-20070219600-$ | US-20070233191-$ | US-20070265608-$ |	(US-PGPUB; USPAT)	OR	ON	ON	2024/04/10 10:53 AM

		US-20070287994-$ | US-20070299433-$ | US-20080021369-$ | US-20080154250-$ | US-20080287908-$ | US-20090198216-$ | US-20090306644-$ | US-20090318914-$ | US-20100049187-$ | US-20100057048-$ | US-20100168737-$ | US-20100204560-$ | US-20100305715-$ | US-20110004207-$ | US-20110152855-$ | US-20110238057-$ | US-20110264086-$ | US-20120078377-$ | US-20120191003-$ | US-20120259326-$ | US-20120323214-$ | US-20120323227-$ | US-20120323232-$ | US-20130018367-$ | US-20130123778-$ | US-20130158475-$ | US-20130165916-$ | US-20130172877-$ | US-20130178910-$ | US-20130253387-$ | US-20130253389-$ | US-20130282084-$ | US-20130289552-$ | US-20140005706-$ | US-20140018792-$ | US-20140025069-$ | US-20140074091-$ | US-20140100557-$ | US-20140114233-$ | US-20140180196-$ | US-20140200581-$ | US-20140243793-$ | US-20140276752-$ | US-20140303665-$ | US-20150006606-$ | US-20150018818-$ | US-20150031946-$ | US-20150066006-$ | US-20150112321-$ | US-20150119881-$ | US-20150150624-$ | US-20150164571-$ | US-20150182282-$ | US-20150202003-$ | US-20150257754-$ | US-20150257824-$ | US-20150257825-$ | US-20150265812-$ |				

		US-20150289750-$ | US-20150297282-$ | US-20150313669-$ | US-20150351836-$ | US-20160008053-$ | US-20160015450-$ | US-20160045277-$ | US-20160120598-$ | US-20160128767-$ | US-20160250474-$ | US-20160287315-$ | US-20160331459-$ | US-20160354136-$ | US-20170071494-$ | US-20170095252-$ | US-20170095288-$ | US-20170151014-$ | US-20170209199-$ | US-20170215950-$ | US-20170215952-$ | US-20170231474-$ | US-20170231651-$ | US-20170245924-$ | US-20170252089-$ | US-20170252100-$ | US-20170266422-$ | US-20170312021-$ | US-20180042471-$ | US-20180049802-$ | US-20180063678-$ | US-20180078327-$ | US-20180103994-$ | US-20180125560-$ | US-20180133460-$ | US-20180153375-$ | US-20180161577-$ | US-20180168503-$ | US-20180169414-$ | US-20180177542-$ | US-20180177546-$ | US-20180185085-$ | US-20180228533-$ | US-20180317993-$ | US-20180317997-$ | US-20180344378-$ | US-20180344411-$ | US-20190069949-$ | US-20190076185-$ | US-20190083157-$ | US-20190175242-$ | US-20190223944-$ | US-20190231409-$ | US-20190231429-$ | US-20190239953-$ | US-20190239954-$ | US-20190239955-$ | US-20190239956-$ | US-20190239957-$ |				

		US-20190282289-$ | US-20190314620-$ | US-20200078134-$ | US-20200086112-$ | US-20200107882-$ | US-20200129223-$).DID.					
L57	51	(US-20200289185-$ | US-20210315627-$ | US-10022529-$ | US-10028780-$ | US-10028781-$ | US-10052465-$ | US-10155108-$ | US-10159538-$ | US-10201687-$ | US-10238861-$ | US-10252048-$ | US-10265115-$ | US-10307200-$ | US-10335221-$ | US-10363094-$ | US-10376300-$ | US-10398489-$ | US-10448985-$ | US-10456185-$ | US-10456186-$ | US-10485603-$ | US-10588682-$ | US-10610675-$ | US-10687883-$ | US-10695557-$ | US-10729897-$ | US-10894011-$ | US-11033318-$ | US-11241271-$ | US-11304746-$ | US-11679077-$ | US-11766286-$ | US-20020606-$ | US-20020613-$ | US-20021128-$ | US-20030123-$ | US-20031113-$ | US-20050414-$ | US-20050804-$ | US-20050825-$ | US-20051027-$ | US-20051222-$ | US-20051229-$ | US-20060216-$ | US-20060316-$ | US-20060511-$ | US-20060518-$ | US-20060601-$ | US-20060706-$ | US-20061102-$ | US-	(US-PGPUB; USPAT)	OR	ON	ON	2024/04/10 10:53 AM

		20070111-$ | US- 20070208-$ | US- 20070412-$ | US- 20070426-$ | US- 20070607-$ | US- 20070726-$ | US- 20070920-$ | US- 20071004-$ | US- 20071115-$ | US- 20071213-$ | US- 20071227-$ | US- 20080124-$ | US- 20080626-$ | US- 20081120-$ | US- 20090806-$ | US- 20091210-$ | US- 20091224-$ | US- 20100225-$ | US- 20100304-$ | US- 20100701-$ | US- 20100812-$ | US- 20101202-$ | US- 20110106-$ | US- 20110623-$ | US- 20110929-$ | US- 20111027-$ | US- 20120329-$ | US- 20120726-$ | US- 20121011-$ | US- 20121220-$ | US- 20130117-$ | US- 20130516-$ | US- 20130620-$ | US- 20130627-$ | US- 20130704-$ | US- 20130711-$ | US- 20130926-$ | US- 20131024-$ | US- 20131031-$ | US- 20140102-$ | US- 20140116-$ | US- 20140123-$ | US- 20140313-$ | US- 20140410-$ | US- 20140424-$ | US- 20140626-$ | US- 20140717-$ | US- 20140828-$ | US- 20140918-$ | US- 20141009-$ | US- 20150101-$ | US- 20150115-$ | US- 20150129-$ | US- 20150305-$ | US- 20150423-$ | US- 20150430-$ | US- 20150604-$ | US- 20150618-$ | US-					

		20150702-$ | US- 20150723-$ | US- 20150917-$ | US- 20150924-$ | US- 20151015-$ | US- 20151022-$ | US- 20151105-$ | US- 20151210-$ | US- 20160114-$ | US- 20160121-$ | US- 20160218-$ | US- 20160505-$ | US- 20160512-$ | US- 20160901-$ | US- 20161006-$ | US- 20161117-$ | US- 20161208-$ | US- 20170316-$ | US- 20170406-$ | US- 20170601-$ | US- 20170727-$ | US- 20170803-$ | US- 20170817-$ | US- 20170831-$ | US- 20170907-$ | US- 20170921-$ | US- 20171102-$ | US- 20180215-$ | US- 20180222-$ | US- 20180301-$ | US- 20180322-$ | US- 20180419-$ | US- 20180510-$ | US- 20180517-$ | US- 20180607-$ | US- 20180614-$ | US- 20180621-$ | US- 20180628-$ | US- 20180705-$ | US- 20180816-$ | US- 20181108-$ | US- 20181206-$ | US- 20190307-$ | US- 20190314-$ | US- 20190321-$ | US- 20190613-$ | US- 20190725-$ | US- 20190801-$ | US- 20190808-$ | US- 20190919-$ | US- 20191017-$ | US- 20200312-$ | US- 20200319-$ | US- 20200409-$ | US- 20200430-$ | US- 20200917-$ | US- 20211014-$ | US- 2929852-$ | US-					

		3117571-$ | US- 3538919-$ | US- 3941121-$ | US- 3987795-$ | US- 4271848-$ | US- 4411266-$ | US- 4898169-$ | US- 5184625-$ | US- 5395383-$ | US- 5456662-$ | US- 5562720-$ | US- 5575788-$ | US- 5588429-$ | US- 5697536-$ | US- 5697882-$ | US- 5746224-$ | US- 5766605-$ | US- 5800429-$).DID.					
L58	84	(US-5823197-$ | US- 5827277-$ | US- 5836947-$ | US- 5843026-$ | US- 6033397-$ | US- 6045532-$ | US- 6053172-$ | US- 6063079-$ | US- 6106518-$ | US- 6139527-$ | US- 6142991-$ | US- 6273886-$ | US- 6332880-$ | US- 6352533-$ | US- 6517534-$ | US- 6517535-$ | US- 6520185-$ | US- 6529756-$ | US- 6594518-$ | US- 6595988-$ | US- 6626899-$ | US- 6652548-$ | US- 6669689-$ | US- 6685648-$ | US- 6746474-$ | US- 7195629-$ | US- 7232458-$ | US- 7285119-$ | US- 7500985-$ | US- 7524318-$ | US- 7608275-$ | US- 7654997-$ | US- 7655243-$ | US- 7758571-$ | US- 7771409-$ | US- 7803150-$ | US- 8105817-$ | US- 8133497-$ | US- 8231613-$ | US-	(US-PGPUB; USPAT)	OR	ON	ON	2024/04/10 10:53 AM

		8338164-$ | US- 8372068-$ | US- 8382746-$ | US- 8460181-$ | US- 8463359-$ | US- 8512324-$ | US- 8636684-$ | US- 8747401-$ | US- 8920414-$ | US- 8936594-$ | US- 8939970-$ | US- 8961391-$ | US- 8986301-$ | US- 8996137-$ | US- 9055965-$ | US- 9072597-$ | US- 9101384-$ | US- 9179964-$ | US- 9179967-$ | US- 9179973-$ | US- 9233245-$ | US- 9237924-$ | US- 9333023-$ | US- 9370649-$ | US- 9415194-$ | US- 9433463-$ | US- 9440065-$ | US- 9452010-$ | US- 9486278-$ | US- 9498278-$ | US- 9498283-$ | US- 9526571-$ | US- 9649156-$ | US- 9655667-$ | US- 9687288-$ | US- 9687296-$ | US- 9700707-$ | US- 9737702-$ | US- 9763723-$ | US- 9763743-$ | US- 9788886-$ | US- 9801752-$ | US- 9888957-$ | US- 9913682-$ | US- 9943361-$).DID.					
L59	67	(WO-0117450-$ | JP- 2001120565-$ | JP- 2001526077-$ | WO- 2007008954-$ | JP- 2007537784-$ | JP- 2009538641-$ | WO- 2009154456-$ | WO- 2010077980-$ | JP- 2012143573-$ | JP- 2015507964-$ | WO- 2015013252-$ | WO- 2015048806-$ | WO-	(US-PGPUB; USPAT; USOCR; FIT (AU, AP, AT, BE, BG, BR, BY, CA, CH, CN, CS, CU, CZ, DD, DE, DK, EA, EE, EP, ES, FI, FR, GB, HR, HU, ID, IE, IL, IS, IT, JP, KR, LT, LU, LV, MA, OA, RU, SU, WO, MC, MD, MY, NL, NO, NZ, PH, PL, PT, RO, RS, SE, SG, SI, SK,	OR	ON	ON	2024/04/10 10:55 AM

		2016134264-$ | WO-2016183337-$ | WO-2018087601-$ | WO-2021205230-$ | WO-2021205231-$ | WO-2021260435-$ | EP-2929852-$ | WO-9410921-$).DID.	TH, TN, TR, TW, UA, VN); FPRS; EPO; JPO; DERWENT; IBM_TDB)				

PE2E SEARCH - Search History (Interference)

Ref #	Hits	Search Query	DBs	Default Operator	Plurals	British Equivalents	Time Stamp
N1	39	L1 andL2	(US-PGPUB; USPAT)	OR	ON	ON	2023/08/10 11:51 AM
N2	31	L1 AND L2	(US-PGPUB; USPAT)	OR	ON	ON	2023/08/10 11:51 AM
N3	25	(((((("NEURENT") near3 ("MEDICAL") near3 ("LIMITED"))).AS,AANM.) AND L2) AND (nas$4 WITH multi-seg$4)	(US-PGPUB; USPAT)	OR	ON	ON	2023/08/10 11:52 AM
N4	25	(nas$4 WITH multi-seg$4) AND L3	(US-PGPUB; USPAT)	OR	ON	ON	2023/08/10 11:55 AM
N5	5	L48 AND ((first WITH (segment OR section OR portion)) WITH (second WITH (segment OR section OR portion)) WITH (apart OR distance OR space))	(US-PGPUB; USPAT)	OR	ON	ON	2023/11/27 09:38 AM
N6	11	L54 AND (elapse$4 near2 time)	(US-PGPUB; USPAT)	OR	ON	ON	2024/04/15 12:29 PM

UNITED STATES PATENT AND TRADEMARK OFFICE

UNITED STATES DEPARTMENT OF COMMERCE
United States Patent and Trademark Office
Address: COMMISSIONER FOR PATENTS
P.O. Box 1450
Alexandria, Virginia 22313-1450
www.uspto.gov

APPLICATION NUMBER	FILING OR 371(C) DATE	FIRST NAMED APPLICANT	ATTY. DOCKET NO./TITLE
18/411,476	01/12/2024	David Townley	NEURE-008/03US 35242/151

CONFIRMATION NO. 8746

21710
BROWN RUDNICK LLP
ONE FINANCIAL CENTER
BOSTON, MA 02111

POA ACCEPTANCE LETTER

Date Mailed: 04/16/2024

NOTICE OF ACCEPTANCE OF POWER OF ATTORNEY

This is in response to the Power of Attorney filed 04/10/2024.

The Power of Attorney in this application is accepted. Correspondence in this application will be mailed to the above address as provided by 37 CFR 1.33.

Questions about the contents of this notice and the requirements it sets forth should be directed to the Office of Data Management, Application Assistance Unit, at **(571) 272-4000** or **(571) 272-4200** or **1-888-786-0101**.

/ttran/

UNITED STATES
PATENT AND TRADEMARK OFFICE

P.O. Box 1450
Alexandria, VA 22313 - 1450
www.uspto.gov

TERMINAL DISCLAIMER TO OBVIATE A DOUBLE PATENTING REJECTION OVER A PRIOR PATENT

APPLICATION #	FILING DATE	FIRST NAMED INVENTOR	ATTORNEY DOCKET #
18411476	01/12/2024	David Townley	NEURE-008/03US 35242/151

Title of Invention

SYSTEMS AND METHODS FOR IMPROVING SLEEP WITH THERAPEUTIC NASAL TREATMENT

☑ Filing of terminal disclaimer does not obviate requirement for response under 37 CFR 1.111 to outstanding Office Action

☑ This electronic Terminal Disclaimer is not being used for a Joint Research Agreement.

Owner	Percent interest
Neurent Medical Limited	100%
Total	100%

The owner(s) of percent interest listed above in the instant application hereby disclaims, except as provided below, the terminal part of the statutory term of any patent granted on the instant application which would extend beyond the expiration date of the full statutory term of any patent granted on pending reference Application Number(s)

Application #	Filing Date

as the term of any patent granted on said reference application may be shortened by any terminal disclaimer filed prior to the grant of any patent on the pending reference application. The owner hereby agrees that any patent so granted on the instant application shall be enforceable only for and during such period that it and any patent granted on the reference application are commonly owned. This agreement runs with any patent granted on the

instant application and is binding upon the grantee, its successors or assigns.
In making the above disclaimer, the owner does not disclaim the terminal part of any patent granted on the instant application that would extend to the expiration date of the full statutory term of any patent granted on said reference application, "as the term of any patent granted on said reference application may be shortened by any terminal disclaimer filed prior to the grant of any patent on the pending reference application," in the event that any such patent granted on the pending reference application: expires for failure to pay a maintenance fee, is held unenforceable, is found invalid by a court of competent jurisdiction, is statutorily disclaimed in whole or terminally disclaimed under 37 CFR 1.321, has all claims canceled by a reexamination certificate, is reissued, or is in any manner terminated prior to the expiration of its full statutory term as shortened by any terminal disclaimer filed prior to its grant.

The owner(s) of percent interest listed above in the instant application hereby disclaims, except as provided below, the terminal part of the statutory term of any patent granted on the instant application which would extend beyond the expiration date of the full statutory term of prior patent number(s)

Patent #
11883091

as the term of said prior patent is presently shortened by any terminal disclaimer. The owner hereby agrees that any patent so granted on the instant application shall be enforceable only for and during such period that it and the prior patent are commonly owned. This agreement runs with any patent granted on the instant application and is binding upon the grantee, its successors or assigns.
In making the above disclaimer, the owner does not disclaim the terminal part of the term of any patent granted on the instant application that would extend to the expiration date of the full statutory term of the prior patent, "as the term of said prior patent is presently shortened by any terminal disclaimer," in the event that said prior patent later:
- expires for failure to pay a maintenance fee;
- is held unenforceable;
- is found invalid by a court of competent jurisdiction;
- is statutorily disclaimed in whole or terminally disclaimed under 37 CFR 1.321;
- has all claims canceled by a reexamination certificate;
- is reissued; or
- is in any manner terminated prior to the expiration of its full statutory term as presently shortened by any terminal disclaimer.

Terminal disclaimer fee under 37 CFR 1.20(d) included with Electronic Terminal Disclaimer request.

Applicant claims the following entity status:
Small

I hereby declare that all statements made herein of my own knowledge are true and that all statemnts made on information and belief are believed to be true; and further that these statements were made with the knowledge that willful false statements and the like so made are punishable by fine or imprisonment, or both, under Section 1001 of Title 18 of the United States Code and that such willful false statements may jeopardize the validity of the application or any patent issued thereon.

I certify, in accordance with 37 CFR 1.4(d)(4) that I am: An attorney or agent registered to practice before the Patent and Trademark Office who is of record in this application

Signature	Name	Registration #
/Matthew P. York/	Matthew York	66470

* Statement under 37 CFR 3.73(b) is required if terminal disclaimer is signed by the assignee (owner). Form PTO/SB/96 may be used for making this certification. See MPEP 324.

UNITED STATES
PATENT AND TRADEMARK OFFICE

P.O. Box 1450
Alexandria, VA 22313 - 1450
www.uspto.gov

ELECTRONIC PAYMENT RECEIPT

APPLICATION #	RECEIPT DATE / TIME	ATTORNEY DOCKET #
18/411,476	04/11/2024 01:38:17 PM Z ET	NEURE-008/03US 35242/151

Title of Invention

SYSTEMS AND METHODS FOR IMPROVING SLEEP WITH THERAPEUTIC NASAL TREATMENT

Application Information

APPLICATION TYPE	Utility - Nonprovisional Application under 35 USC 111(a)	PATENT #	-
CONFIRMATION #	8746	FILED BY	Matthew York
PATENT CENTER #	65055605	AUTHORIZED BY	-
CUSTOMER #	21710	FILING DATE	01/12/2024
CORRESPONDENCE ADDRESS	-	FIRST NAMED INVENTOR	David Townley

Payment Information

PAYMENT METHOD	PAYMENT TRANSACTION ID	PAYMENT AUTHORIZED BY
DA / 500369	E20244AD38335283	Matthew York

FEE CODE	DESCRIPTION	ITEM PRICE($)	QUANTITY	ITEM TOTAL($)
2814	STATUTORY DISCLAIMER, INCLUDING TERMINAL DISCLAIMER	170.00	1	170.00
			TOTAL AMOUNT:	$170.00

This Acknowledgement Receipt evidences receipt on the noted date by the USPTO of the indicated documents, characterized by the applicant, and including page counts, where applicable. It serves as evidence of receipt similar to a Post Card, as described in MPEP 503.

New Applications Under 35 U.S.C. 111

If a new application is being filed and the application includes the necessary components for filing date (see 37 CFR 1.53(b)-(d) and MPEP 506), a Filing Receipt (37 CFR 1.54) will be issued in due course and the date shown on this Acknowledgement Receipt will establish the filing date of the application.

National Stage of an International Application under 35 U.S.C. 371

If a timely submission to enter the national stage of an international application is compliant with the conditions of 35 U.S.C. 371 and other applicable requirements a Form PCT/DO/EO/903 indicating acceptance of the application as a national stage submission under 35 U.S.C. 371 will be issued in addition to the Filing Receipt, in due course.

New International Application Filed with the USPTO as a Receiving Office

If a new international application is being filed and the international application includes the necessary components for an international filing date (see PCT Article 11 and MPEP 1810), a Notification of the International Application Number and of the International Filing Date (Form PCT/RO/105) will be issued in due course, subject to prescriptions concerning national security, and the date shown on this Acknowledgement Receipt will establish the international filing date of the application.

UNITED STATES
PATENT AND TRADEMARK OFFICE

P.O. Box 1450
Alexandria, VA 22313 - 1450
www.uspto.gov

ELECTRONIC ACKNOWLEDGEMENT RECEIPT

APPLICATION #	RECEIPT DATE / TIME	ATTORNEY DOCKET #
18/411,476	**04/11/2024 01:38:17 PM Z ET**	**NEURE-008/03US 35242/151**

Title of Invention

SYSTEMS AND METHODS FOR IMPROVING SLEEP WITH THERAPEUTIC NASAL TREATMENT

Application Information

APPLICATION TYPE	Utility - Nonprovisional Application under 35 USC 111(a)	PATENT #	-
CONFIRMATION #	8746	FILED BY	Matthew York
PATENT CENTER #	65055605	FILING DATE	01/12/2024
CUSTOMER #	21710	FIRST NAMED INVENTOR	David Townley
CORRESPONDENCE ADDRESS	-	AUTHORIZED BY	-

Documents

TOTAL DOCUMENTS: 2

DOCUMENT	PAGES	DESCRIPTION	SIZE (KB)
petition-request.pdf	3	Terminal Disclaimer-Filed (Electronic)	48 KB
grantLetter.pdf	1	Terminal Disclaimer-Electronic-Approved	19 KB

Digest

DOCUMENT	MESSAGE DIGEST(SHA-512)
petition-request.pdf	87728A5643C1563A0E25888C59D27CF7A5FFCFCE3E009C5D84AB48D50F4A05F30E4E52516A72635F13531A507AEDA01E70C

	32C4714F51796B5982694389B4B90
grantLetter.pdf	6C6AA3BB130200164OD904601A1B23DF7A814096C03225D132 CCBAC2CD7099BA518281211AF26A0628CD64FF71F4BB89E4 EA43858DF7088093A74423423AE396

This Acknowledgement Receipt evidences receipt on the noted date by the USPTO of the indicated documents, characterized by the applicant, and including page counts, where applicable. It serves as evidence of receipt similar to a Post Card, as described in MPEP 503.

New Applications Under 35 U.S.C. 111

If a new application is being filed and the application includes the necessary components for filing date (see 37 CFR 1.53(b)-(d) and MPEP 506), a Filing Receipt (37 CFR 1.54) will be issued in due course and the date shown on this Acknowledgement Receipt will establish the filing date of the application.

National Stage of an International Application under 35 U.S.C. 371

If a timely submission to enter the national stage of an international application is compliant with the conditions of 35 U.S.C. 371 and other applicable requirements a Form PCT/DO/EO/903 indicating acceptance of the application as a national stage submission under 35 U.S.C. 371 will be issued in addition to the Filing Receipt, in due course.

New International Application Filed with the USPTO as a Receiving Office

If a new international application is being filed and the international application includes the necessary components for an international filing date (see PCT Article 11 and MPEP 1810), a Notification of the International Application Number and of the International Filing Date (Form PCT/RO/105) will be issued in due course, subject to prescriptions concerning national security, and the date shown on this Acknowledgement Receipt will establish the international filing date of the application.

UNITED STATES
PATENT AND TRADEMARK OFFICE

Commissioner for Patents
United States Patent and Trademark Office
P.O. Box 1450
Alexandria, VA 22313 - 1450
www.uspto.gov

APPROVAL LETTER

APPLICATION #	FILING DATE	APPLICANT/PATENT UNDER REEXAMINATION
18/411,476	01/12/2024	David Townley

Title of Invention

SYSTEMS AND METHODS FOR IMPROVING SLEEP WITH THERAPEUTIC NASAL TREATMENT

Electronic terminal disclaimer filed on 04/11/2024

☑ Approved

This patent is subject to a Terminal Disclaimer

Approved / Disapproved by: Electronic Terminal Disclaimer automatically approved

UNITED STATES
PATENT AND TRADEMARK OFFICE

P.O. Box 1450
Alexandria, VA 22313 - 1450
www.uspto.gov

ELECTRONIC ACKNOWLEDGEMENT RECEIPT

APPLICATION #	RECEIPT DATE / TIME	ATTORNEY DOCKET #
18/411,476	**04/10/2024 11:52:29 AM Z ET**	**NEURE-008/03US 35242/151**

Title of Invention

SYSTEMS AND METHODS FOR IMPROVING SLEEP WITH THERAPEUTIC NASAL TREATMENT

Application Information

APPLICATION TYPE	Utility - Nonprovisional Application under 35 USC 111(a)	PATENT #	-
CONFIRMATION #	8746	FILED BY	Matthew York
PATENT CENTER #	65036401	FILING DATE	01/12/2024
CUSTOMER #	21710	FIRST NAMED INVENTOR	David Townley
CORRESPONDENCE ADDRESS	-	AUTHORIZED BY	-

Documents

TOTAL DOCUMENTS: 1

DOCUMENT	PAGES	DESCRIPTION	SIZE (KB)
NEURE-008-03US_POA.pdf	2	Power of Attorney	336 KB

Digest

DOCUMENT	MESSAGE DIGEST(SHA-512)
NEURE-008-03US_POA.pdf	A963022A9F19A5329770B90B32D5A6A1729869AAFBB7DD6058 A0C1961A4511FE229C6318A7EC015A4DCE49A00F20576F7677 12A85E26869AB2285B80C81D04FA

This Acknowledgement Receipt evidences receipt on the noted date by the USPTO of the indicated documents, characterized by the applicant, and including page counts, where applicable. It serves as evidence of receipt similar to a Post Card, as

described in MPEP 503.

New Applications Under 35 U.S.C. 111

If a new application is being filed and the application includes the necessary components for filing date (see 37 CFR 1.53(b)-(d) and MPEP 506), a Filing Receipt (37 CFR 1.54) will be issued in due course and the date shown on this Acknowledgement Receipt will establish the filing date of the application

National Stage of an International Application under 35 U.S.C. 371

If a timely submission to enter the national stage of an international application is compliant with the conditions of 35 U.S.C. 371 and other applicable requirements a Form PCT/DO/EO/903 indicating acceptance of the application as a national stage submission under 35 U.S.C. 371 will be issued in addition to the Filing Receipt, in due course.

New International Application Filed with the USPTO as a Receiving Office

If a new international application is being filed and the international application includes the necessary components for an international filing date (see PCT Article 11 and MPEP 1810), a Notification of the International Application Number and of the International Filing Date (Form PCT/RO/105) will be issued in due course, subject to prescriptions concerning national security, and the date shown on this Acknowledgement Receipt will establish the international filing date of the application.

Doc Code: PA..
Document Description: Power of Attorney

PTO/AIA/82A (07-13)
Approved for use through 09/30/2025. OMB 0651-0035
U.S. Patent and Trademark Office; U.S. DEPARTMENT OF COMMERCE
Under the Paperwork Reduction Act of 1995, no persons are required to respond to a collection of information unless it displays a valid OMB control number.

TRANSMITTAL FOR POWER OF ATTORNEY TO ONE OR MORE REGISTERED PRACTITIONERS

NOTE: This form is to be submitted with the Power of Attorney by Applicant form (PTO/AIA/82B) to identify the application to which the Power of Attorney is directed, in accordance with 37 CFR 1.5, unless the application number and filing date are identified in the Power of Attorney by Applicant form. If neither form PTO/AIA/82A nor form PTO/AIA82B identifies the application to which the Power of Attorney is directed, the Power of Attorney will not be recognized in the application.

Application Number	18/411,476
Filing Date	January 12, 2024
First Named Inventor	David Townley
Title	SYSTEMS AND METHODS FOR IMPROVING SLEEP WITH THERAPEUTIC NASAL TREATMENT
Art Unit	3794
Examiner Name	Abigail Marie Bock
Attorney Docket Number	NEURE-008/03US 35242/151

SIGNATURE of Applicant or Patent Practitioner

Signature	/Matthew P. York/	Date (Optional)	
Name	Matthew P. York	Registration Number	66470
Title (if Applicant is a juristic entity)			
Applicant Name (if Applicant is a juristic entity)			

NOTE: This form must be signed in accordance with 37 CFR 1.33. See 37 CFR 1.4(d) for signature requirements and certifications. If more than one applicant, use multiple forms.

☑ *Total of 2 forms are submitted.

A Federal agency may not conduct or sponsor, and a person is not required to respond to, nor shall a person be subject to a penalty for failure to comply with an information collection subject to the requirements of the Paperwork Reduction Act of 1995, unless the information collection has a currently valid OMB Control Number. The OMB Control Number for this information collection is 0651-0035. Public burden for this form is estimated to average 3 minutes per response, including the time for reviewing instructions, searching existing data sources, gathering and maintaining the data needed, and completing and reviewing the information collection. Send comments regarding this burden estimate or any other aspect of this information collection, including suggestions for reducing this burden to the Chief Administrative Officer, United States Patent and Trademark Office, P.O. Box 1450, Alexandria, VA 22313-1450 or email InformationCollection@uspto.gov. **DO NOT SEND FEES OR COMPLETED FORMS TO THIS ADDRESS.** If filing this completed form by mail, send to: **Commissioner for Patents, P.O. Box 1450, Alexandria, VA 22313-1450.**

If you need assistance in completing the form, call 1-800-PTO-9199 and select option 2.

Doc Code: PA..
Document Description: Power of Attorney

PTO/AIA/82B (07-13)
Approved for use through 03/31/2021. OMB 0651-0035
U.S. Patent and Trademark Office; U.S. DEPARTMENT OF COMMERCE
Under the Paperwork Reduction Act of 1995, no persons are required to respond to a collection of information unless it displays a valid OMB control number

POWER OF ATTORNEY BY APPLICANT

I hereby revoke all previous powers of attorney given in the application identified in either the attached transmittal letter or the boxes below.

Application Number	Filing Date

(Note: The boxes above may be left blank if information is provided on form PTO/AIA/82A.)

☑ I hereby appoint the Patent Practitioner(s) associated with the following Customer Number as my/our attorney(s) or agent(s), and to transact all business in the United States Patent and Trademark Office connected therewith for the application referenced in the attached transmittal letter (form PTO/AIA/82A) or identified above: 21710

OR

☐ I hereby appoint Practitioner(s) named in the attached list (form PTO/AIA/82C) as my/our attorney(s) or agent(s), and to transact all business in the United States Patent and Trademark Office connected therewith for the patent application referenced in the attached transmittal letter (form PTO/AIA/82A) or identified above. (Note: Complete form PTO/AIA/82C.)

Please recognize or change the correspondence address for the application identified in the attached transmittal letter or the boxes above to:

☑ The address associated with the above-mentioned Customer Number

OR

☐ The address associated with Customer Number:

OR

☐ Firm or Individual Name					
Address					
City		State		Zip	
Country					
Telephone		Email			

I am the Applicant (if the Applicant is a juristic entity, list the Applicant name in the box):

Neurent Medical Limited

☐ Inventor or Joint Inventor (title not required below)

☐ Legal Representative of a Deceased or Legally Incapacitated Inventor (title not required below)

☑ Assignee or Person to Whom the Inventor is Under an Obligation to Assign (provide signer's title if applicant is a juristic entity)

☐ Person Who Otherwise Shows Sufficient Proprietary Interest (e.g., a petition under 37 CFR 1.46(b)(2) was granted in the application or is concurrently being filed with this document) (provide signer's title if applicant is a juristic entity)

SIGNATURE of Applicant for Patent

The undersigned (whose title is supplied below) is authorized to act on behalf of the applicant (e.g., where the applicant is a juristic entity).

Signature		Date (Optional)	1 June 2020
Name	David Townley		
Title	Chief Technology Officer (CTO), Neurent Medical Limited		

NOTE: Signature - This form must be signed by the applicant in accordance with 37 CFR 1.33. See 37 CFR 1.4 for signature requirements and certifications. If more than one applicant, use multiple forms.

☐ Total of forms are submitted.

This collection of information is required by 37 CFR 1.131, 1.32, and 1.33. The information is required to obtain or retain a benefit by the public which is to file (and by the USPTO to process) an application. Confidentiality is governed by 35 U.S.C. 122 and 37 CFR 1.11 and 1.14. This collection is estimated to take 3 minutes to complete, including gathering, preparing, and submitting the completed application form to the USPTO. Time will vary depending upon the individual case. Any comments on the amount of time you require to complete this form and/or suggestions for reducing this burden, should be sent to the Chief Information Officer, U.S. Patent and Trademark Office, U.S. Department of Commerce, P.O. Box 1450, Alexandria, VA 22313-1450. DO NOT SEND FEES OR COMPLETED FORMS TO THIS ADDRESS. **SEND TO: Commissioner for Patents, P.O. Box 1450, Alexandria, VA 22313-1450.**

If you need assistance in completing the form, call 1-800-PTO-9199 and select option 2.

UNITED STATES PATENT AND TRADEMARK OFFICE

UNITED STATES DEPARTMENT OF COMMERCE
United States Patent and Trademark Office
Address: COMMISSIONER FOR PATENTS
P.O. Box 1450
Alexandria, Virginia 22313-1450
www.uspto.gov

APPLICATION NO.	FILING DATE	FIRST NAMED INVENTOR	ATTORNEY DOCKET NO.	CONFIRMATION NO.
18/411,476	01/12/2024	David Townley	NEURE-008/03US 35242/151	8746

21710 7590 03/21/2024

BROWN RUDNICK LLP
ONE FINANCIAL CENTER
BOSTON, MA 02111

EXAMINER	
CENTRAL, DOCKET	

ART UNIT	PAPER NUMBER
OPAP	

NOTIFICATION DATE	DELIVERY MODE
03/21/2024	ELECTRONIC

Please find below and/or attached an Office communication concerning this application or proceeding.

The time period for reply, if any, is set in the attached communication.

Notice of the Office communication was sent electronically on above-indicated "Notification Date" to the following e-mail address(es):

ip@brownrudnick.com
usactions@brownrudnick.com

Decision Granting Request for Prioritized Examination (Track I)	**Application No.** 18/411,476	**Applicant(s)** Townley, David	
	Examiner CHERYL P GIBSON BAYLOR	**Art Unit** OPET	**AIA (FITF) Status** Yes

1. THE REQUEST FILED 12 January 2024 IS **GRANTED** .

The above-identified application has met the requirements for prioritized examination
- A. ☑ for an original nonprovisional application (Track I).
- B. ☐ for an application undergoing continued examination (RCE).

2. **The above-identified application will undergo prioritized examination**. The application will be accorded special status throughout its entire course of prosecution until one of the following occurs:
   - A. filing a **petition for extension of time** to extend the time period for filing a reply;
   - B. filing an **amendment to amend the application to contain more than four independent claims, more than thirty total claims** , or a multiple dependent claim;
   - C. filing a **request for continued examination** ;
   - D. filing a notice of appeal;
   - E. filing a request for suspension of action;
   - F. mailing of a notice of allowance;
   - G. mailing of a final Office action;
   - H. completion of examination as defined in 37 CFR 41.102; or
   - I. abandonment of the application.

Telephone inquiries with regard to this decision should be directed to CHERYL GIBSON BAYLOR at (571)272-3213. In his/her absence, calls may be directed to Petition Help Desk at (571) 272-3282.

/CHERYL GIBSON BAYLOR/ Paralegal Specialist, OPET	

PATENT COOPERATION TREATY

ENTERED IN CPI

From the INTERNATIONAL SEARCHING AUTHORITY

PCT

To:
Schoen, Adam M.
BROWN RUDNICK LLP
One Financial Center
Boston, MA 02111
ETATS-UNIS D'AMERIQUE

NOTIFICATION OF TRANSMITTAL OF THE INTERNATIONAL SEARCH REPORT AND THE WRITTEN OPINION OF THE INTERNATIONAL SEARCHING AUTHORITY, OR THE DECLARATION

(PCT Rule 44.1)

Applicant's or agent's file reference NEURE-001/09WO 352	Date of mailing *(day/month/year)* 12 May 2020 (12-05-2020)
International application No. PCT/IB2019/001298	**FOR FURTHER ACTION** See paragraphs 1 and 4 below
Applicant NEURENT MEDICAL LIMITED	International filing date *(day/month/year)* 6 December 2019 (06-12-2019)

1. ☒ The applicant is hereby notified that the international search report and the written opinion of the International Searching Authority have been established and are transmitted herewith.

   Filing of amendments and statement under Article 19:
   The applicant is entitled, if he so wishes, to amend the claims of the International Application (see Rule 46):

   When? The time limit for filing such amendments is normally two months from the date of transmittal of the International Search Report.

   How? Directly to the International Bureau of WIPO, 34 chemin des Colombettes 1211 Geneva 20, Switzerland, Facsimile No.: (41-22) 338.82.70

   For more detailed instructions, see *PCT Applicant's Guide*, International Phase, paragraphs 9.004 - 9.011.

2. ☐ The applicant is hereby notified that no international search report will be established and that the declaration under Article 17(2)(a) to that effect and the written opinion of the International Searching Authority are transmitted herewith.

3. ☐ **With regard to any protest** against payment of (an) additional fee(s) under Rule 40.2, the applicant is notified that:

   ☐ the protest together with the decision thereon has been transmitted to the International Bureau together with any applicant's request to forward the texts of both the protest and the decision thereon to the designated Offices.

   ☐ no decision has been made yet on the protest; the applicant will be notified as soon as a decision is made.

4. **Reminders**

   The applicant may **submit comments on an informal basis on the written opinion of the International Searching Authority** to the International Bureau. These comments will be made available to the public after international publication. The international Bureau will send a copy of such comments to all designated Offices unless an international preliminary examination report has been or is to be established.

   Shortly after the expiration of **18 months from the priority date, the international application will be published** by the International Bureau. If the applicant wishes to avoid or postpone publication, a notice of withdrawal of the international application, or of the priority claim, must reach the International Bureau before the completion of the technical preparations for international publication (Rules 90*bis*.1 and 90*bis*.3).

   Within **19 months** from the priority date, but only in respect of some designated Offices, a demand for international preliminary examination must be filed if the applicant wishes to postpone the entry into the national phase **until 30 months** from the priority date (in some Offices even later); otherwise, the applicant must, **within 20 months** from the priority date, perform the prescribed acts for **entry into the national phase** before those designated Offices. In respect of other designated Offices, the time limit of **30 months** (or later) will apply even if no demand is filed within 19 months. For details about the applicable time limits, Office by Office, see www.wipo.int/pct/en/texts/time_limits.html and the *PCT Applicant's Guide*, National Chapters.

   Within **22 months from the priority date, the applicant may request that a supplementary international search be carried out** by a different International Searching Authority that offers this service (Rule 45*bis*.1). The procedure for requesting supplementary international search is described in the *PCT Applicant's Guide*, International Phase, paragraphs 8.006-8.032.

Name and mailing address of the International Searching Authority European Patent Office, P.B. 5818 Patentlaan 2 NL-2280 HV Rijswijk Tel. (+31-70) 340-2040 Fax: (+31-70) 340-3016	Authorized officer MARRA, Emanuela Tel: +49 (0)89 2399-7235

Form PCT/ISA/220 (July 2017)

PATENT COOPERATION TREATY

PCT

INTERNATIONAL SEARCH REPORT

(PCT Article 18 and Rules 43 and 44)

Applicant's or agent's file reference	FOR FURTHER ACTION	see Form PCT/ISA/220 as well as, where applicable, item 5 below.
NEURE-001/09WO 352		
International application No.	International filing date *(day/month/year)*	(Earliest) Priority Date *(day/month/year)*
PCT/IB2019/001298	6 December 2019 (06-12-2019)	11 December 2018 (11-12-2018)

Applicant

NEURENT MEDICAL LIMITED

This international search report has been prepared by this International Searching Authority and is transmitted to the applicant according to Article 18. A copy is being transmitted to the International Bureau.

This international search report consists of a total of 5 sheets.

[X] It is also accompanied by a copy of each prior art document cited in this report.

1. **Basis of the report**

a. With regard to the **language**, the international search was carried out on the basis of:

[X] the international application in the language in which it was filed

[ ] a translation of the international application into _____, which is the language of a translation furnished for the purposes of international search (Rules 12.3(a) and 23.1(b))

b. [ ] This international search report has been established taking into account the **rectification of an obvious mistake** authorized by or notified to this Authority under Rule 91 (Rule 43.6*bis*(a)).

c. [ ] With regard to any **nucleotide and/or amino acid sequence** disclosed in the international application, see Box No. I.

2. [X] **Certain claims were found unsearchable** (See Box No. II)

3. [ ] **Unity of invention is lacking** (see Box No III)

4. With regard to the **title**,

[X] the text is approved as submitted by the applicant

[ ] the text has been established by this Authority to read as follows:

5. With regard to the **abstract**,

[X] the text is approved as submitted by the applicant

[ ] the text has been established, according to Rule 38.2, by this Authority as it appears in Box No. IV. The applicant may, within one month from the date of mailing of this international search report, submit comments to this Authority

6. With regard to the **drawings**,

a. the figure of the **drawings** to be published with the abstract is Figure No. 2

[ ] as suggested by the applicant

[X] as selected by this Authority, because the applicant failed to suggest a figure

[ ] as selected by this Authority, because this figure better characterizes the invention

b. [ ] none of the figures is to be published with the abstract

Aerin Exhibit 1011, Page 124 of 2183
Aerin Medical Inc. v. Neurent Medical Ltd.
IPR2025-01126

INTERNATIONAL SEARCH REPORT

International application No.
PCT/IB2019/001298

Box No. II Observations where certain claims were found unsearchable (Continuation of item 2 of first sheet)

This international search report has not been established in respect of certain claims under Article 17(2)(a) for the following reasons:

1. [X] Claims Nos.: 11-20
because they relate to subject matter not required to be searched by this Authority, namely:

The subject-matter of claims 11-20 refers to a surgical and therapeutic treatment.According to the PCT neither search (Rule 39.1(iv) PCT) nor examination (Rule 67.1(iv) PCT) is required for such subject-matter.

2. [ ] Claims Nos.:
because they relate to parts of the international application that do not comply with the prescribed requirements to such an extent that no meaningful international search can be carried out, specifically:

3. [ ] Claims Nos.:
because they are dependent claims and are not drafted in accordance with the second and third sentences of Rule 6.4(a).

Box No. III Observations where unity of invention is lacking (Continuation of item 3 of first sheet)

This International Searching Authority found multiple inventions in this international application, as follows:

1. [ ] As all required additional search fees were timely paid by the applicant, this international search report covers all searchable claims.

2. [ ] As all searchable claims could be searched without effort justifying an additional fees, this Authority did not invite payment of additional fees.

3. [ ] As only some of the required additional search fees were timely paid by the applicant, this international search report covers only those claims for which fees were paid, specifically claims Nos.:

4. [ ] No required additional search fees were timely paid by the applicant. Consequently, this international search report is restricted to the invention first mentioned in the claims; it is covered by claims Nos.:

Remark on Protest

[ ] The additional search fees were accompanied by the applicant's protest and, where applicable, the payment of a protest fee.

[ ] The additional search fees were accompanied by the applicant's protest but the applicable protest fee was not paid within the time limit specified in the invitation.

[ ] No protest accompanied the payment of additional search fees.

Aerin Exhibit 1011, Page 125 of 2183
Aerin Medical Inc. v. Neurent Medical Ltd.
IPR2025-01126

INTERNATIONAL SEARCH REPORT

International application No
PCT/IB2019/001298

A. CLASSIFICATION OF SUBJECT MATTER
INV. A61B18/14
ADD. A61B17/00 A61B18/12 A61B18/00

According to International Patent Classification (IPC) or to both national classification and IPC

B. FIELDS SEARCHED

Minimum documentation searched (classification system followed by classification symbols)
A61B

Documentation searched other than minimum documentation to the extent that such documents are included in the fields searched

Electronic data base consulted during the international search (name of data base and, where practicable, search terms used)
EPO-Internal, BIOSIS, COMPENDEX, INSPEC, WPI Data

C. DOCUMENTS CONSIDERED TO BE RELEVANT

Category*	Citation of document, with indication, where appropriate, of the relevant passages	Relevant to claim No.
X	US 2016/331459 A1 (TOWNLEY DAVID [IE] ET AL) 17 November 2016 (2016-11-17) cited in the application paragraphs [0002], [0030], [0070], [0083] - [0085], [0102]; figures 5F, 10A	1-10
X	US 2018/133460 A1 (TOWNLEY DAVID [IE] ET AL) 17 May 2018 (2018-05-17) cited in the application paragraphs [0002], [0042] - [0045]; figure 3B	1-10
A	US 2018/125560 A1 (SAADAT VAHID [US] ET AL) 10 May 2018 (2018-05-10) the whole document	1-10

-/--

[X] Further documents are listed in the continuation of Box C. [X] See patent family annex.

* Special categories of cited documents :

"A" document defining the general state of the art which is not considered to be of particular relevance

"E" earlier application or patent but published on or after the international filing date

"L" document which may throw doubts on priority claim(s) or which is cited to establish the publication date of another citation or other special reason (as specified)

"O" document referring to an oral disclosure, use, exhibition or other means

"P" document published prior to the international filing date but later than the priority date claimed

"T" later document published after the international filing date or priority date and not in conflict with the application but cited to understand the principle or theory underlying the invention

"X" document of particular relevance; the claimed invention cannot be considered novel or cannot be considered to involve an inventive step when the document is taken alone

"Y" document of particular relevance; the claimed invention cannot be considered to involve an inventive step when the document is combined with one or more other such documents, such combination being obvious to a person skilled in the art

"&" document member of the same patent family

Date of the actual completion of the international search	Date of mailing of the international search report
29 April 2020	12/05/2020

Name and mailing address of the ISA/	Authorized officer
European Patent Office, P.B. 5818 Patentlaan 2 NL - 2280 HV Rijswijk Tel. (+31-70) 340-2040, Fax: (+31-70) 340-3016	Aronsson, Fredrik

Form PCT/ISA/210 (second sheet) (April 2005)

Aerin Exhibit 1011, Page 126 of 2183
Aerin Medical Inc. v. Neurent Medical Ltd.
IPR2025-01126

INTERNATIONAL SEARCH REPORT

International application No
PCT/IB2019/001298

C(Continuation). DOCUMENTS CONSIDERED TO BE RELEVANT

Category*	Citation of document, with indication, where appropriate, of the relevant passages	Relevant to claim No.
A	US 2018/103994 A1 (FOX JASON WILLIAM [US] ET AL) 19 April 2018 (2018-04-19) the whole document	1-10
A	US 2018/042471 A1 (CHANDLER STEPHEN W [US] ET AL) 15 February 2018 (2018-02-15) the whole document	1-10

Form PCT/ISA/210 (continuation of second sheet) (April 2005)

Aerin Exhibit 1011, Page 127 of 2183
Aerin Medical Inc. v. Neurent Medical Ltd.
IPR2025-01126

INTERNATIONAL SEARCH REPORT

Information on patent family members

International application No
PCT/IB2019/001298

Patent document cited in search report	Publication date	Patent family member(s)	Publication date
US 2016331459 A1	17-11-2016	AU 2016262085 A1	04-01-2018
		CA 2984207 A1	17-11-2016
		CN 107835705 A	23-03-2018
		EP 3294410 A2	21-03-2018
		HK 1252823 A1	06-06-2019
		JP 2018515314 A	14-06-2018
		US 2016331459 A1	17-11-2016
		US 2019231429 A1	01-08-2019
		US 2019239953 A1	08-08-2019
		US 2019239954 A1	08-08-2019
		US 2019239955 A1	08-08-2019
		US 2019239956 A1	08-08-2019
		US 2019239957 A1	08-08-2019
		US 2020100838 A1	02-04-2020
		US 2020107882 A1	09-04-2020
		WO 2016183337 A2	17-11-2016
US 2018133460 A1	17-05-2018	AU 2017357869 A1	06-06-2019
		CA 3041440 A1	17-05-2018
		CN 110191674 A	30-08-2019
		EP 3537954 A1	18-09-2019
		JP 2019535386 A	12-12-2019
		US 2018133460 A1	17-05-2018
		US 2020086112 A1	19-03-2020
		US 2020101283 A1	02-04-2020
		WO 2018087601 A1	17-05-2018
US 2018125560 A1	10-05-2018	CN 109600988 A	09-04-2019
		EP 3471638 A1	24-04-2019
		JP 2019526300 A	19-09-2019
		US 2018125560 A1	10-05-2018
		WO 2017218854 A1	21-12-2017
US 2018103994 A1	19-04-2018	NONE	
US 2018042471 A1	15-02-2018	US 2015230700 A1	20-08-2015
		US 2015258315 A1	17-09-2015
		US 2016135671 A1	19-05-2016
		US 2018042471 A1	15-02-2018

Information on Search Strategy - Pilot phase (see OJ 2015, A86)
The type of information contained in this sheet may change during the pilot for improving the usefulness of this new service.

Application Number
PCT/IB2019/001298

TITLE: SYSTEMS AND METHODS FOR THERAPEUTIC NASAL NEUROMODULATION

APPLICANT: NEURENT MEDICAL LIMITED

IPC CLASSIFICATION: A61B18/14, A61B17/00, A61B18/12, A61B18/00

EXAMINER: Aronsson, Fredrik

CONSULTED DATABASES: BIOSIS, COMPDX, EPODOC, INSPEC, KIME, MEDLINE, NPL, WPI

CLASSIFICATION SYMBOLS DEFINING EXTENT OF THE SEARCH:

IPC:

CPC: A61B2017/00867, A61B18/1485, A61B2018/1475, A61B2018/1467, A61B2018/1407, A61B2018/144, A61B18/1206, A61B2018/00982, A61B2018/00916, A61B2018/00642, A61B2018/00702, A61B2018/00791, A61B2018/00875, A61B2018/00577, A61B2018/00327, A61B2018/00434, A61B2018/00839, A61B2018/143, A61B2018/00678, A61B2018/00214, A61B2018/0016

FI/F-TERMS:

KEYWORDS OR OTHER ELEMENTS FEATURING THE INVENTION:
Device for modulating nerves in the nose for treatment of rhinosinusitis, the device having two expandable deployable segments carrying electrodes.

EPO FORM P864.42

PATENT COOPERATION TREATY

From the
INTERNATIONAL SEARCHING AUTHORITY

To:

see form PCT/ISA/220

PCT

WRITTEN OPINION OF THE
INTERNATIONAL SEARCHING AUTHORITY
(PCT Rule 43*bis*.1)

Date of mailing
(day/month/year) see form PCT/ISA/210 (second sheet)

Applicant's or agent's file reference
see form PCT/ISA/220

FOR FURTHER ACTION
See paragraph 2 below

International application No.	International filing date *(day/month/year)*	Priority date *(day/month/year)*
PCT/IB2019/001298	06.12.2019	11.12.2018

International Patent Classification (IPC) or both national classification and IPC
INV. A61B18/14 ADD. A61B17/00 A61B18/12 A61B18/00

Applicant
NEURENT MEDICAL LIMITED

1. This opinion contains indications relating to the following items:

- ☒ Box No. I Basis of the opinion
- ☐ Box No. II Priority
- ☒ Box No. III Non-establishment of opinion with regard to novelty, inventive step and industrial applicability
- ☐ Box No. IV Lack of unity of invention
- ☒ Box No. V Reasoned statement under Rule 43*bis*.1(a)(i) with regard to novelty, inventive step and industrial applicability; citations and explanations supporting such statement
- ☐ Box No. VI Certain documents cited
- ☒ Box No. VII Certain defects in the international application
- ☐ Box No. VIII Certain observations on the international application

2. **FURTHER ACTION**

If a demand for international preliminary examination is made, this opinion will usually be considered to be a written opinion of the International Preliminary Examining Authority ("IPEA") except that this does not apply where the applicant chooses an Authority other than this one to be the IPEA and the chosen IPEA has notified the International Bureau under Rule 66.1*bis*(b) that written opinions of this International Searching Authority will not be so considered.

If this opinion is, as provided above, considered to be a written opinion of the IPEA, the applicant is invited to submit to the IPEA a written reply together, where appropriate, with amendments, before the expiration of 3 months from the date of mailing of Form PCT/ISA/220 or before the expiration of 22 months from the priority date, whichever expires later.

For further options, see Form PCT/ISA/220.

Name and mailing address of the ISA:	Date of completion of this opinion	Authorized Officer
European Patent Office D-80298 Munich Tel. +49 89 2399 - 0 Fax: +49 89 2399 - 4465	see form PCT/ISA/210	Aronsson, Fredrik Telephone No. +49 89 2399-0

Form PCT/ISA/237 (Cover Sheet) (January 2015)

Box No. I Basis of the opinion

1. With regard to the **language**, this opinion has been established on the basis of:

   ☑ the international application in the language in which it was filed.

   ☐ a translation of the international application into , which is the language of a translation furnished for the purposes of international search (Rules 12.3(a) and 23.1 (b)).

2. ☐ This opinion has been established taking into account the **rectification of an obvious mistake** authorized by or notified to this Authority under Rule 91 (Rule 43*bis*.1(a))

3. ☐ With regard to any **nucleotide and/or amino acid sequence** disclosed in the international application, this opinion has been established on the basis of a sequence listing:

   a. ☐ forming part of the international application as filed:

      ☐ in the form of an Annex C/ST.25 text file.

      ☐ on paper or in the form of an image file.

   b. ☐ furnished together with the international application under PCT Rule 13*ter*.1(a) for the purposes of international search only in the form of an Annex C/ST.25 text file.

   c. ☐ furnished subsequent to the international filing date for the purposes of international search only:

      ☐ in the form of an Annex C/ST.25 text file (Rule 13*ter*.1(a)).

      ☐ on paper or in the form of an image file (Rule 13*ter*.1(b) and Administrative Instructions, Section 713).

4. ☐ In addition, in the case that more than one version or copy of a sequence listing has been filed or furnished, the required statements that the information in the subsequent or additional copies is identical to that forming part of the application as filed or does not go beyond the application as filed, as appropriate, were furnished.

5. Additional comments:

Aerin Exhibit 1011, Page 131 of 2183
Aerin Medical Inc. v. Neurent Medical Ltd.
IPR2025-01126

Box No. III Non-establishment of opinion with regard to novelty, inventive step and industrial applicability

The questions whether the claimed invention appears to be novel, to involve an inventive step (to be non obvious), or to be industrially applicable have not been examined in respect of

☐ the entire international application

☒ claims Nos. 11-20

because:

☒ the said international application, or the said claims Nos. 11-20 relate to the following subject matter which does not require an international search *(specify)*:

see separate sheet

☐ the description, claims or drawings *(indicate particular elements below)* or said claims Nos. are so unclear that no meaningful opinion could be formed *(specify)*:

☐ the claims, or said claims Nos. are so inadequately supported by the description that no meaningful opinion could be formed *(specify)*:

☒ no international search report has been established for the whole application or for said claims Nos. 11-20

☐ a meaningful opinion could not be formed without the sequence listing; the applicant did not, within the prescribed time limit:

☐ furnish a sequence listing in the form of an Annex C/ST.25 text file, and such listing was not available to the International Searching Authority in the form and manner acceptable to it; or the sequence listing furnished did not comply with the standard provided for in Annex C of the Administrative Instructions.

☐ furnish a sequence listing on paper or in the form of an image file complying with the standard provided for in Annex C of the Administrative Instructions, and such listing was not available to the International Searching Authority in the form and manner acceptable to it; or the sequence listing furnished did not comply with the standard provided for in Annex C of the Administrative Instructions.

☐ pay the required late furnishing fee for the furnishing of a sequence listing in response to an invitation under Rule 13*ter*.1(a) or (b).

☒ See Supplemental Box for further details

Aerin Exhibit 1011, Page 132 of 2183
Aerin Medical Inc. v. Neurent Medical Ltd.
IPR2025-01126

Box No. V Reasoned statement under Rule 43*bis*.1(a)(i) with regard to novelty, inventive step or industrial applicability; citations and explanations supporting such statement

1. Statement

Novelty (N)	Yes:	Claims	
	No:	Claims	1-10
Inventive step (IS)	Yes:	Claims	
	No:	Claims	1-10
Industrial applicability (IA)	Yes:	Claims	1-10
	No:	Claims	

2. Citations and explanations

see separate sheet

Box No. VII Certain defects in the international application

The following defects in the form or contents of the international application have been noted:

see separate sheet

1 Re Item III

Non-establishment of opinion with regard to novelty, inventive step and industrial applicability

The subject-matter of claims 11-20 refers to a surgical and therapeutic treatment.

According to the PCT neither search (Rule 39.1(iv) PCT) nor examination (Rule 67.1(iv) PCT) is required for such subject-matter.

2 Re Item V

Reasoned statement with regard to novelty, inventive step or industrial applicability; citations and explanations supporting such statement

2.1 Reference is made to the following documents:

D1	US 2016/331459 A1 (TOWNLEY DAVID [IE] ET AL) 17 November 2016 (2016-11-17)cited in the application
D2	US 2018/133460 A1 (TOWNLEY DAVID [IE] ET AL) 17 May 2018 (2018-05-17)cited in the application
D3	US 2018/125560 A1 (SAADAT VAHID [US] ET AL) 10 May 2018 (2018-05-10)
D4	US 2018/103994 A1 (FOX JASON WILLIAM [US] ET AL) 19 April 2018 (2018-04-19)
D5	US 2018/042471 A1 (CHANDLER STEPHEN W [US] ET AL) 15 February 2018 (2018-02-15)

2.2 The present application does not meet the criteria of Article 33(2) PCT, because the subject-matter of claim 1 is not new.

D1 discloses:

A device for treating a condition within a nasal cavity of a patient [0002], the device comprising: a multi-segment end effector (fig. 10A) for delivering energy to one or more target sites within the nasal cavity of the patient, the multi-segment end effector comprising a proximal segment (1060) that is spaced apart from a distal segment (1048).

D1 also discloses:

A device for treating a condition within a nasal cavity of a patient [0002], the device comprising: a multi-segment end effector (fig. 5F) for delivering energy to one or more target sites within the nasal cavity of the patient, the multi-segment end effector comprising a proximal segment (proximal part of struts 440) that is spaced apart from a distal segment (distal parts of struts 440).

2.3 Dependent claims 2-10 do not contain any features which, in combination with the features of any claim to which they refer, meet the requirements of the PCT in respect of novelty and/or inventive step, see:

claims 2-6: Fig. 5F: proximal electrode pairs 444a/444b and distal electrode pairs 444a/444b; claim 7: [0070]; claims 8-10: [0030].

3 Re Item VII

Certain defects in the international application

3.1 The independent claim is not in the two-part form in accordance with Rule 6.3(b) PCT.

3.2 The features of the claims are not provided with reference signs placed in parentheses (Rule 6.2(b) PCT).

3.3 Contrary to the requirements of Rule 5.1(a)(ii) PCT, the relevant background art disclosed in D3-D5 is not mentioned in the description, nor are these documents identified therein.

Aerin Exhibit 1011, Page 135 of 2183
Aerin Medical Inc. v. Neurent Medical Ltd.
IPR2025-01126

Possible steps after receipt of the international search report (ISR) and written opinion of the International Searching Authority (WO/ISA)

General information

For all international applications, the competent International Searching Authority (ISA) will establish an international search report (**ISR**) accompanied by a written opinion of the International Searching Authority (**WO/ISA**). The **WO/ISA** may be responded to by

- filing informal comments with the International **Bureau of WIPO (IB)** (where no demand for international preliminary examination (**demand**) is filed)
- filing amendments under Art. 19 PCT (this can be done whether or not a **demand** is filed)
- filing amendments under Art. 34 PCT and/or formal observations in response to objections raised in the **WO/ISA** (where a **demand** *is* actually filed)

This document explains these possibilities.

Filing informal comments

After receipt of the **ISR and WO/ISA**, the applicant may file informal comments on the **WO/ISA, directly with the IB** (see International Search and Preliminary Examination Guidelines 2.15). These will be communicated to the designated/elected Offices, together with the International Preliminary Report on Patentability (**IPRP**) at 30 months from the priority date.

Amending claims under Art. 19 PCT

The applicant may file **amended claims** under Art. 19 PCT, **directly with the IB** by the later of the following dates:

- 2 months from the date of mailing of the **ISR** and the **WO/ISA**
- 16 months from the priority date

However, any such amendment received by the **IB** after the expiration of the applicable time limit shall be **considered to have been received on time** by the IB, if it reaches it before the technical preparations for international publication have been completed (the 15th day prior to the date of publication, see PCT Applicant's Guide, International Phase, 9.013).

For further information, please see Rule 46 PCT as well as form PCT/ISA/220.

Please also note that, when filing amended claims under Art. 19 PCT, such amendments shall be **accompanied by a letter** identifying the amendments made and also the basis for the amendments in the application as originally filed (Rule 46.5(b) PCT). Where a **demand** is filed, failure to comply with this requirement may result in the amendments being ignored in the International Preliminary Examination Report (**IPER**), see Rule 70.2(*c-bis*) PCT.

Filing a demand for international preliminary examination

In principle, the **WO/ISA** will be considered to be the written opinion of the International Preliminary Examining Authority (**IPEA**). Where the **WO/ISA** issued by the **EPO** as **ISA** gives a positive opinion on the international application and the invention to which it relates, filing a **demand** with the **EPO** as **IPEA** would normally be unnecessary, since a positive IPRP would anyway be established by the IB based on the WO/ISA (see also further below).

If the applicant wishes to file a **demand** (for example, to allow him to argue his case in international preliminary examination with regard to objections raised in a negative **WO/ISA** before the **IPEA** issues an **IPER**), this must be done before expiration of **3 months after the date of mailing of the ISR and WO/ISA** or **22 months after priority date**, whichever expires later (Rule 54*bis* PCT). Amendments under Art. 34 PCT can be filed with the IPEA, normally at the same time as filing the demand (Rule 66.1(b) PCT) or within the time limit set for reply to any written opinion issued during international preliminary examination by the **IPEA**.

If a **demand** is filed at the **EPO** as **IPEA** and no comments/amendments have been received by the time the **EPO** starts drawing up the **IPER** (Rule 66.4*bis* PCT), the **WO/ISA** will be transformed by the **IPEA** into an **IPER** (also called the **IPRP (Chapter II)** which would merely reflect the content of the **WO/ISA** (OJ 10/2011, 532). The **demand** can still be withdrawn (Art. 37 PCT).

Please also note that, when filing amendments under Art. 34 PCT, such amendments shall be accompanied by a letter which identifies the amendments made and also the basis for the amendments in the application as originally filed (Rule 66.8(a) PCT). Failure to comply with this requirement may result in the amendments being ignored in the **IPER (IPRP (Chapter II))**, see Rule 70.2(*c-bis*) PCT.

Filing a request for supplementary international search

The applicant may, with the **IB**, file a request for **supplementary international search** under Rule 45*bis*.1 PCT. The present **ISR** and **WO/ISA** may also be taken into account in the execution of that supplementary international search, provided that these are available to the Authority charged with this task before it starts the supplementary search (Rule 45*bis*.5 PCT).

This kind of request **cannot be filed specifying the ISA** who did the **international search**.

More information on this topic can be found in the **PCT Applicant's Guide**, Chapter 8 (http://www.wipo.int/pct/en/guide/ip08.html).

End of the international phase

Where no **demand** is filed, at the end of the international phase, the **IB** will transform the **WO/ISA** into the IPRP (PCT Chapter I) (Rule 44*bis* PCT), which will then be transmitted together with possible informal comments to the designated Offices. Where a demand is filed, the **WO/ISA** is not transformed into an **IPRP (Chapter I)** by the **IB**, but rather the **IPEA** will establish an **IPER**, (the IPER is the same as the IPRP (PCT Chapter II), see Rule 70.15 PCT).

Aerin Exhibit 1011, Page 137 of 2183
Aerin Medical Inc. v. Neurent Medical Ltd.
IPR2025-01126

PATENT COOPERATION TREATY

PCT

INTERNATIONAL SEARCH REPORT

(PCT Article 18 and Rules 43 and 44)

Applicant's or agent's file reference	**FOR FURTHER ACTION**	see Form PCT/ISA/220 as well as, where applicable, item 5 below.
1205338002WO00		
International application No.	International filing date *(day/month/year)*	(Earliest) Priority Date *(day/month/year)*
PCT/IB2017/001541	13 November 2017 (13-11-2017)	11 November 2016 (11-11-2016)
Applicant		
NATIONAL UNIVERSITY OF IRELAND, GALWAY		

This international search report has been prepared by this International Searching Authority and is transmitted to the applicant according to Article 18. A copy is being transmitted to the International Bureau.

This international search report consists of a total of 6 sheets.

[X] It is also accompanied by a copy of each prior art document cited in this report.

1. **Basis of the report**
   a. With regard to the **language,** the international search was carried out on the basis of:
      [X] the international application in the language in which it was filed
      [ ] a translation of the international application into _____, which is the language of a translation furnished for the purposes of international search (Rules 12.3(a) and 23.1(b))
   b. [ ] This international search report has been established taking into account the **rectification of an obvious mistake** authorized by or notified to this Authority under Rule 91 (Rule 43.6*bis*(a)).
   c. [ ] With regard to any **nucleotide and/or amino acid sequence** disclosed in the international application, see Box No. I.

2. [X] **Certain claims were found unsearchable** (See Box No. II)

3. [ ] **Unity of invention is lacking** (see Box No III)

4. With regard to the **title,**
   [X] the text is approved as submitted by the applicant
   [ ] the text has been established by this Authority to read as follows:

5. With regard to the **abstract,**
   [X] the text is approved as submitted by the applicant
   [ ] the text has been established, according to Rule 38.2, by this Authority as it appears in Box No. IV. The applicant may, within one month from the date of mailing of this international search report, submit comments to this Authority

6. With regard to the **drawings,**
   a. the figure of the **drawings** to be published with the abstract is Figure No. 3A
      [X] as suggested by the applicant
      [ ] as selected by this Authority, because the applicant failed to suggest a figure
      [ ] as selected by this Authority, because this figure better characterizes the invention
   b. [ ] none of the figures is to be published with the abstract

Aerin Exhibit 1011, Page 138 of 2183
Aerin Medical Inc. v. Neurent Medical Ltd.
IPR2025-01126

INTERNATIONAL SEARCH REPORT

International application No.
PCT/IB2017/001541

Box No. II Observations where certain claims were found unsearchable (Continuation of item 2 of first sheet)

This international search report has not been established in respect of certain claims under Article 17(2)(a) for the following reasons:

1. [X] Claims Nos.: 24-42
because they relate to subject matter not required to be searched by this Authority, namely:

see FURTHER INFORMATION sheet PCT/ISA/210

2. [ ] Claims Nos.:
because they relate to parts of the international application that do not comply with the prescribed requirements to such an extent that no meaningful international search can be carried out, specifically:

3. [ ] Claims Nos.:
because they are dependent claims and are not drafted in accordance with the second and third sentences of Rule 6.4(a).

Box No. III Observations where unity of invention is lacking (Continuation of item 3 of first sheet)

This International Searching Authority found multiple inventions in this international application, as follows:

1. [ ] As all required additional search fees were timely paid by the applicant, this international search report covers all searchable claims.

2. [ ] As all searchable claims could be searched without effort justifying an additional fees, this Authority did not invite payment of additional fees.

3. [ ] As only some of the required additional search fees were timely paid by the applicant, this international search report covers only those claims for which fees were paid, specifically claims Nos.:

4. [ ] No required additional search fees were timely paid by the applicant. Consequently, this international search report is restricted to the invention first mentioned in the claims; it is covered by claims Nos.:

Remark on Protest

[ ] The additional search fees were accompanied by the applicant's protest and, where applicable, the payment of a protest fee.

[ ] The additional search fees were accompanied by the applicant's protest but the applicable protest fee was not paid within the time limit specified in the invitation.

[ ] No protest accompanied the payment of additional search fees.

Aerin Exhibit 1011, Page 139 of 2183
Aerin Medical Inc. v. Neurent Medical Ltd.
IPR2025-01126

INTERNATIONAL SEARCH REPORT

International application No
PCT/IB2017/001541

A. CLASSIFICATION OF SUBJECT MATTER
INV. A61B5/00 A61B5/053
ADD. A61B18/00

According to International Patent Classification (IPC) or to both national classification and IPC

B. FIELDS SEARCHED

Minimum documentation searched (classification system followed by classification symbols)
A61B

Documentation searched other than minimum documentation to the extent that such documents are included in the fields searched

Electronic data base consulted during the international search (name of data base and, where practicable, search terms used)
EPO-Internal, WPI Data

C. DOCUMENTS CONSIDERED TO BE RELEVANT

Category*	Citation of document, with indication, where appropriate, of the relevant passages	Relevant to claim No.
X	EP 2 929 852 A1 (HOLAIRA INC [US]) 14 October 2015 (2015-10-14) paragraphs [0094], [0118] - [0120], [0060], [0061]; figures 10,23 paragraphs [0094], [0095], [0093]; figure 22	1-23,43, 44
X	US 2015/066006 A1 (SRIVASTAVA NISHANT R [US]) 5 March 2015 (2015-03-05) paragraph [0031]; figures 1,5	1,43
X	WO 2016/134264 A1 (BOSTON SCIENT SCIMED INC [US]) 25 August 2016 (2016-08-25) paragraphs [0044], [0051]; figure 2	1,43

-/--

[X] Further documents are listed in the continuation of Box C.

[X] See patent family annex.

* Special categories of cited documents :

"A" document defining the general state of the art which is not considered to be of particular relevance

"E" earlier application or patent but published on or after the international filing date

"L" document which may throw doubts on priority claim(s) or which is cited to establish the publication date of another citation or other special reason (as specified)

"O" document referring to an oral disclosure, use, exhibition or other means

"P" document published prior to the international filing date but later than the priority date claimed

"T" later document published after the international filing date or priority date and not in conflict with the application but cited to understand the principle or theory underlying the invention

"X" document of particular relevance; the claimed invention cannot be considered novel or cannot be considered to involve an inventive step when the document is taken alone

"Y" document of particular relevance; the claimed invention cannot be considered to involve an inventive step when the document is combined with one or more other such documents, such combination being obvious to a person skilled in the art

"&" document member of the same patent family

Date of the actual completion of the international search	Date of mailing of the international search report
20 March 2018	03/04/2018

Name and mailing address of the ISA/	Authorized officer
European Patent Office, P.B. 5818 Patentlaan 2 NL - 2280 HV Rijswijk Tel. (+31-70) 340-2040, Fax: (+31-70) 340-3016	Monogyiou, Efstratia

2

Form PCT/ISA/210 (second sheet) (April 2005)

Aerin Exhibit 1011, Page 140 of 2183
Aerin Medical Inc. v. Neurent Medical Ltd.
IPR2025-01126

INTERNATIONAL SEARCH REPORT

International application No
PCT/IB2017/001541

C(Continuation). DOCUMENTS CONSIDERED TO BE RELEVANT

Category*	Citation of document, with indication, where appropriate, of the relevant passages	Relevant to claim No.
X,P	WO 2016/183337 A2 (NAT UNIV IRELAND GALWAY [IE]; QI ZHAN MICHELE [US]) 17 November 2016 (2016-11-17) cited in the application claims 26-41; figures 2,4 -----	1-23,43, 44

2

Aerin Exhibit 1011, Page 141 of 2183
Aerin Medical Inc. v. Neurent Medical Ltd.
IPR2025-01126

INTERNATIONAL SEARCH REPORT

Information on patent family members

International application No
PCT/IB2017/001541

Patent document cited in search report	Publication date	Patent family member(s)	Publication date
EP 2929852 A1	14-10-2015	AU 2011237666 A1	08-11-2012
		CA 2795564 A1	04-10-2012
		CN 102905639 A	30-01-2013
		CN 104939920 A	30-09-2015
		EP 2555700 A2	13-02-2013
		EP 2929852 A1	14-10-2015
		JP 2013523346 A	17-06-2013
		US 2011301587 A1	08-12-2011
		WO 2011127216 A2	13-10-2011
US 2015066006 A1	05-03-2015	AU 2014312243 A1	17-03-2016
		EP 3038556 A1	06-07-2016
		US 2015066006 A1	05-03-2015
		US 2016287114 A1	06-10-2016
		WO 2015031648 A1	05-03-2015
WO 2016134264 A1	25-08-2016	CN 107223034 A	29-09-2017
		EP 3258832 A1	27-12-2017
		US 2016242667 A1	25-08-2016
		WO 2016134264 A1	25-08-2016
WO 2016183337 A2	17-11-2016	AU 2016262085 A1	04-01-2018
		CA 2984207 A1	17-11-2016
		EP 3294410 A2	21-03-2018
		US 2016331459 A1	17-11-2016
		WO 2016183337 A2	17-11-2016

FURTHER INFORMATION CONTINUED FROM PCT/ISA/ 210

Continuation of Box II.1

Claims Nos.: 24-42

Claims 24-42 relate to subject-matter considered by this Authority to be covered by the provisions of Art. 17(2)(a)(i) and Rule 39.1(iv) PCT, because said claims define a method of treatment by therapy comprising a step of delivering stimulation energy to a patient. Furthermore, according to Art. 34(4)(a)(i) and Rule 67.1(iv) PCT no examination will be carried out for said claims.

PATENT COOPERATION TREATY

From the
INTERNATIONAL SEARCHING AUTHORITY

To:

see form PCT/ISA/220

PCT

WRITTEN OPINION OF THE INTERNATIONAL SEARCHING AUTHORITY

(PCT Rule 43*bis*.1)

Date of mailing
(day/month/year) see form PCT/ISA/210 (second sheet)

Applicant's or agent's file reference
see form PCT/ISA/220

FOR FURTHER ACTION
See paragraph 2 below

International application No.	International filing date *(day/month/year)*	Priority date *(day/month/year)*
PCT/IB2017/001541	13.11.2017	11.11.2016

International Patent Classification (IPC) or both national classification and IPC
INV. A61B5/00 A61B5/053 ADD. A61B18/00

Applicant
NATIONAL UNIVERSITY OF IRELAND, GALWAY

1. This opinion contains indications relating to the following items:

- ☒ Box No. I Basis of the opinion
- ☐ Box No. II Priority
- ☒ Box No. III Non-establishment of opinion with regard to novelty, inventive step and industrial applicability
- ☐ Box No. IV Lack of unity of invention
- ☒ Box No. V Reasoned statement under Rule 43*bis*.1(a)(i) with regard to novelty, inventive step and industrial applicability; citations and explanations supporting such statement
- ☒ Box No. VI Certain documents cited
- ☒ Box No. VII Certain defects in the international application
- ☒ Box No. VIII Certain observations on the international application

2. **FURTHER ACTION**

If a demand for international preliminary examination is made, this opinion will usually be considered to be a written opinion of the International Preliminary Examining Authority ("IPEA") except that this does not apply where the applicant chooses an Authority other than this one to be the IPEA and the chosen IPEA has notifed the International Bureau under Rule 66.1*bis*(b) that written opinions of this International Searching Authority will not be so considered.

If this opinion is, as provided above, considered to be a written opinion of the IPEA, the applicant is invited to submit to the IPEA a written reply together, where appropriate, with amendments, before the expiration of 3 months from the date of mailing of Form PCT/ISA/220 or before the expiration of 22 months from the priority date, whichever expires later.

For further options, see Form PCT/ISA/220.

Name and mailing address of the ISA:	Date of completion of this opinion	Authorized Officer
European Patent Office D-80298 Munich Tel. +49 89 2399 - 0 Fax: +49 89 2399 - 4465	see form PCT/ISA/210	Monogyiou, Efstratia Telephone No. +49 89 2399-0

Form PCT/ISA/237 (Cover Sheet) (January 2015)

Box No. I Basis of the opinion

1. With regard to the **language**, this opinion has been established on the basis of:

   ☒ the international application in the language in which it was filed.

   ☐ a translation of the international application into , which is the language of a translation furnished for the purposes of international search (Rules 12.3(a) and 23.1 (b)).

2. ☐ This opinion has been established taking into account the **rectification of an obvious mistake** authorized by or notified to this Authority under Rule 91 (Rule 43*bis*.1(a))

3. ☐ With regard to any **nucleotide and/or amino acid sequence** disclosed in the international application, this opinion has been established on the basis of a sequence listing:

   a. ☐ forming part of the international application as filed:

      ☐ in the form of an Annex C/ST.25 text file.

      ☐ on paper or in the form of an image file.

   b. ☐ furnished together with the international application under PCT Rule 13*ter*.1(a) for the purposes of international search only in the form of an Annex C/ST.25 text file.

   c. ☐ furnished subsequent to the international filing date for the purposes of international search only:

      ☐ in the form of an Annex C/ST.25 text file (Rule 13*ter*.1(a)).

      ☐ on paper or in the form of an image file (Rule 13*ter*.1(b) and Administrative Instructions, Section 713).

4. ☐ In addition, in the case that more than one version or copy of a sequence listing has been filed or furnished, the required statements that the information in the subsequent or additional copies is identical to that forming part of the application as filed or does not go beyond the application as filed, as appropriate, were furnished.

5. Additional comments:

Box No. III Non-establishment of opinion with regard to novelty, inventive step and industrial applicability

The questions whether the claimed invention appears to be novel, to involve an inventive step (to be non obvious), or to be industrially applicable have not been examined in respect of

☐ the entire international application

☒ claims Nos. 24-42

because:

☐ the said international application, or the said claims Nos. relate to the following subject matter which does not require an international search *(specify)*:

☐ the description, claims or drawings *(indicate particular elements below)* or said claims Nos. are so unclear that no meaningful opinion could be formed *(specify)*:

☐ the claims, or said claims Nos. are so inadequately supported by the description that no meaningful opinion could be formed *(specify)*:

☒ no international search report has been established for the whole application or for said claims Nos. 24-42

☐ a meaningful opinion could not be formed without the sequence listing; the applicant did not, within the prescribed time limit:

- ☐ furnish a sequence listing in the form of an Annex C/ST.25 text file, and such listing was not available to the International Searching Authority in the form and manner acceptable to it; or the sequence listing furnished did not comply with the standard provided for in Annex C of the Administrative Instructions.
- ☐ furnish a sequence listing on paper or in the form of an image file complying with the standard provided for in Annex C of the Administrative Instructions, and such listing was not available to the International Searching Authority in the form and manner acceptable to it; or the sequence listing furnished did not comply with the standard provided for in Annex C of the Administrative Instructions.
- ☐ pay the required late furnishing fee for the furnishing of a sequence listing in response to an invitation under Rule 13*ter*.1(a) or (b).

☒ See Supplemental Box for further details

Box No. V Reasoned statement under Rule 43*bis*.1(a)(i) with regard to novelty, inventive step or industrial applicability; citations and explanations supporting such statement

1. Statement

Novelty (N)	Yes:	Claims	11, 13-15
	No:	Claims	1-10, 12, 16-23, 43, 44
Inventive step (IS)	Yes:	Claims	
	No:	Claims	1-23, 43, 44
Industrial applicability (IA)	Yes:	Claims	1-23, 43, 44
	No:	Claims	

2. Citations and explanations

see separate sheet

Box No. VI Certain documents cited

1. Certain published documents (Rules 43*bis*.1 and 70.10)

and / or

2. Non-written disclosures (Rules 43*bis*.1 and 70.9)

see form 210

Box No. VII Certain defects in the international application

The following defects in the form or contents of the international application have been noted:

see separate sheet

Box No. VIII Certain observations on the international application

The following observations on the clarity of the claims, description, and drawings or on the question whether the claims are fully supported by the description, are made:

see separate sheet

Re Item III

Non-establishment of opinion with regard to novelty, inventive step and industrial applicability

Claims 24-42 relate to subject-matter considered by this Authority to be covered by the provisions of Art. 17(2)(a)(i) and Rule 39.1(iv) PCT, because said claims define a method of treatment by therapy comprising a step of delivering stimulation energy to a patient. Furthermore, according to Art. 34(4)(a)(i) and Rule 67.1(iv) PCT no examination will be carried out for said claims.

Re Item V

Reasoned statement with regard to novelty, inventive step or industrial applicability; citations and explanations supporting such statement

1 Reference is made to the following documents:

D1 EP 2 929 852 A1 (HOLAIRA INC [US]) 14 October 2015 (2015-10-14)

D2 US 2015/066006 A1 (SRIVASTAVA NISHANT R [US]) 5 March 2015 (2015-03-05)

D3 WO 2016/134264 A1 (BOSTON SCIENT SCIMED INC [US]) 25 August 2016 (2016-08-25)

D4 WO 2016/183337 A2 (NAT UNIV IRELAND GALWAY [IE]; QI ZHAN MICHELE [US]) 17 November 2016 (2016-11-17)cited in the application

2 The present application does not meet the criteria of Article 33(1) PCT, because the subject-matter of claims 1-10, 12, 16-23, 43, 44 is not new in the sense of Article 33(2) PCT for the following reasons:

2.1 Document D1 discloses a system (see Fig. 10) for detecting anatomical structures and therapeutic neuromodulation in a nasal region of a human patient, the system comprising all the features of claim 1:

a shaft having a proximal portion and a distal portion, wherein the shaft is configured to locate the distal portion intraluminally at a target site within a nasal cavity inferior to a sphenopalatine foramen of the human patient (see Fig. 10(230) and par. [0094];

an evaluation/modulation assembly at the distal portion of the shaft (see Fig. 10(220)),

wherein the evaluation/modulation assembly comprises a plurality of electrodes configured to emit stimulating energy to tissue at the target site at frequencies for locating target neural structures and detect bioelectric properties in response to the stimulating energy (Fig. 23(540) and pars. [0118]-[0120]);

and a console including a controller having a computer-readable medium carrying instructions, which when executed by the controller, causes the console to map locations of the target neural structures and causes the evaluation/modulation assembly to apply therapeutic neuromodulation energy in a predetermined neuromodulation pattern based on the locations of the target neural structures (see Fig. 10(210) and pars. [0060], [0061]).

2.2 The applicant's attention is drawn to the fact that documents D2 and D3 disclose a system suitable for detecting anatomical structures and therapeutic neuromodulation in a nasal region of a human patient comprising all the features of claim 1 (see D2: Figs. 1, 5 and par. [0031] and D3: Fig. 2 and pars. [0044], [0051]) and therefore also deprive the subject-matter of claim 1 of novelty.

2.3 Claim 18 although written as an independent claim, comprises all the features of claim 1 and is therefore dependent on claim 1. The additional features of claim 18 are also disclosed in D1: see Fig. 10(212) and par. [0118].

2.4 Claim 43 although written as an independent claim, appears to relate effectively to the same subject-matter of claim 1. Therefore claim 43 is also not new in view of D1-D3 and the passages cited above.

2.5 Notwithstanding the below mentioned lack of clarity, the additional features of dependent claims 2-10, 12, 16-17, 19-23, 44 are also disclosed in the prior art:

claims 2-4, 21, 44: see D1, par. [0120];

claim 5: see D1, par. [0118];

claim 6: see D1, Fig. 10(244) and par. [0060];

claims 7, 8, 19, 20: see D1, par. [0119];

claims 9, 22: see D1, pars. [0094], [0095];

claims 10, 23: see D1, Fig. 10(212);

claims 12, 16: see D1, Fig. 22(500);

claim 17: see D1, par. [0093].

3 Dependent claims 11, 13-15 do not appear to contain any additional features which, in combination with the features of any claim to which they refer, meet the requirements of the PCT in respect of inventive step in the sense of Article 33(3) PCT. Said claims merely define slight constructional changes in the system of claim 1 which come within the scope of the customary practice followed by persons skilled in the art, especially as the advantages thus achieved can readily be foreseen. Consequently, the subject-matter of said claims lacks an inventive step.

Re Item VI

Certain documents cited

Application No Patent No	Publication date *(day/month/year)*	Filing date *(day/month/year)*	Priority date *(valid claim)* *(day/month/year)*
PCT/US2016/032132	17/11/2016	12/05/2016	12/05/2015

The validity of the priority has not been considered because this Authority does not have in its possession a copy of the earlier application whose priority has been claimed. This opinion has nevertheless been established on the assumption that the relevant date (Rules 43bisi and 641) is the claimed priority date. However, care of the

applicant is drawn to the fact that in case the validity of the priority drops, the document indicted in the search report as a P - document (WO 2016/183337) becomes part of the prior art and deprives the novelty of the present set of claims.

Furthermore, the applicant's attention is drawn to the following: The present application claims the priority of the US application US-62/421,135 (11.11.2016). In case the applicant decides to enter the European phase, this priority claim will not hold for the following reason: According to Article 87(1) EPC, only the date of filing of the "first application" can be claimed as a priority. In this case, the subject-matter of the claims 1-23, 43,44 of the present application is already contained in the earlier application PCT/US2016/032132 filed on 12.05.2016, prior to the priority date claimed by the present application, later published as WO 2016/183337 (D4) and originating from the same applicant. Accordingly, the claimed priority of the present application will not be valid in respect of the subject-matter already contained in the earlier application PCT/US2016/032132 (see also Guidelines F-VI, 1.4).

Re Item VII

Certain defects in the international application

1 Claim 18 comprises all the features of claim 1 and is therefore not appropriately formulated as a claim dependent on the latter (Rule 6.4 PCT).

2 Contrary to the requirements of Rule 5.1 (a)(iii) PCT, the relevant background art disclosed in the documents D1-D3 is not mentioned in the description, nor are these documents identified therein.

3 The features of the claims are not provided with reference signs placed in parentheses (Rule 6.2(b) PCT).

4 The independent claim is not in the two-part form in accordance with Rule 6.3 (b) PCT.

5 The incorporation of documents by reference (see for example description, par. [0020]) is not allowable in some of the Designated States.

Re Item VIII

Certain observations on the international application

1 Although claims 1, 18 and 43 have been drafted as separate independent claims, they appear to relate effectively to the same subject-matter and to differ from each other only with regard to the definition of the subject-matter for which protection is sought and/or in respect of the terminology used for the features of that subject-matter. The aforementioned claims therefore lack conciseness and as such do not meet the requirements of Article 6 PCT.

2 Claims 2-4, 21, 44 do not meet the requirements of Article 6 PCT because the matter for which protection is sought is not clearly defined. The claims attempt to define the subject-matter in terms of the result to be achieved (initiate ionic agitation of specific tissue), which merely amounts to a statement of the underlying problem, without providing the technical features necessary for achieving this result (i.e. value of applied frequency).

(19)日本国特許庁(JP)　(12)公開特許公報(A)　(11)特許出願公開番号
特開2012-143573
(P2012-143573A)
(43)公開日　平成24年8月2日(2012.8.2)

(51)Int.Cl.		F I			テーマコード（参考）
A61N 1/10	(2006.01)	A61N	1/10		4C053
A61B 17/00	(2006.01)	A61B	17/00	320	4C160
A61N 1/05	(2006.01)	A61N	1/05		
A61B 18/12	(2006.01)	A61B	17/39		

審査請求 有　請求項の数 15　ＯＬ　（全 34 頁）

(21)出願番号　特願2012-47201 (P2012-47201)
(22)出願日　平成24年3月2日 (2012.3.2)
(62)分割の表示　特願2012-20266 (P2012-20266)の分割
原出願日　平成17年10月5日 (2005.10.5)
(31)優先権主張番号　60/616,254
(32)優先日　平成16年10月5日 (2004.10.5)
(33)優先権主張国　米国 (US)
(31)優先権主張番号　60/624,793
(32)優先日　平成16年11月2日 (2004.11.2)
(33)優先権主張国　米国 (US)
(31)優先権主張番号　11/129,765
(32)優先日　平成17年5月13日 (2005.5.13)
(33)優先権主張国　米国 (US)

(71)出願人　507029764
メドトロニック　アーディアン　ルクセンブルク　ソシエテ　ア　レスポンサビリテ　リミテ
アメリカ合衆国　カリフォルニア州　９４３０３　パロ　アルト　エンバーカデロ　ロード　１８１０エイ
(74)代理人　100082005
弁理士　熊倉　禎男
(74)代理人　100067013
弁理士　大塚　文昭
(74)代理人　100088694
弁理士　弟子丸　健
(74)代理人　100103609
弁理士　井野　砂里

最終頁に続く

(54)【発明の名称】腎臓神経調節装置

(57)【要約】　（修正有）
【課題】鬱血性心不全、腎不全、高血圧症、および／または、それ以外の心腎疾患を、腎臓神経調節および／または腎臓神経除去により治療する装置を提供する。
【解決手段】被検体の腎血管内に経管設置されるのに適した構成のカテーテル２１０であって、複数の支柱または部材から形成されている拡張可能な遠位バスケットが設けられたカテーテル２１０を有しており、更に、該バスケットの支柱または部材に沿って配置されているとともに、腎血管の壁に接触するように設置されるのに好適な構成の複数の電極２１２を有しており、該電極は腎血管の壁を横断して標的腎臓神経に電界を供給することで腎臓徐神経を施すように構成されている腎臓神経調節装置。
【選択図】図４

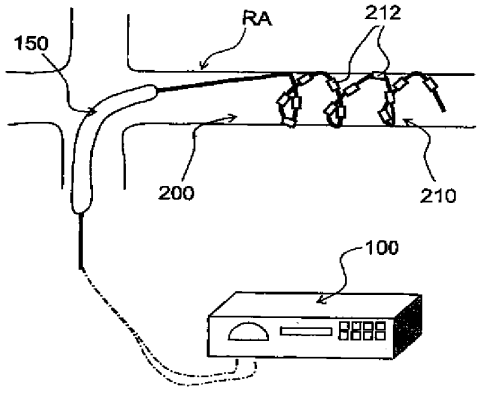

【特許請求の範囲】
【請求項１】
腎臓神経調節装置であって、該装置は、
被検体の腎血管内に経管設置されるのに適した構成のカテーテルであって、複数の支柱または部材から形成されている拡張可能な遠位バスケットが設けられたカテーテルを有しており、更に、
該バスケットの支柱または部材に沿って配置されているとともに、腎血管の壁に接触するように設置されるのに好適な構成の複数の電極を有しており、
該電極は腎血管の壁を横断して標的腎臓神経に電界を供給することで腎臓徐神経を施すように構成されている、装置。
【請求項２】
該拡張可能な遠位バスケットは複数の形状記憶ワイヤまたは形状記憶リボンから製造されている、請求項１に記載の装置。
【請求項３】
該バスケットの支柱または部材は近位接続部材および遠位接続部材において該カテーテルに接続されている、請求項２に記載の装置。
【請求項４】
該バスケットは収縮されて鞘部材内部に収まった状態で腎血管まで搬送され、該バスケットは、鞘部材から取り出されると自己拡張して腎血管の壁に接触するように構成されている、請求項１から請求項３のいずれかに記載の装置。
【請求項５】
該近位接続部材、該遠位接続部材、または、その両方の接続部材は特定距離または不特定距離に亘って該カテーテルのシャフトに沿って並進することで、該バスケットの拡張および収縮を容易にするよう構成されている、請求項１から請求項３のいずれかに記載の装置。
【請求項６】
該拡張可能なバスケットはスロットが設けられたハイポチューブ、レーザー切断されたハイポチューブ、または、その両方のハイポチューブから形成されている、請求項１に記載の装置。
【請求項７】
該バスケットの支柱または部材は近位接続部材および遠位接続部材において該カテーテルに接続されており、該カテーテルは、
該遠位接続部材に接続された内側シャフトおよび該近位接続部材に接続された外側シャフトを更に有しており、
該バスケットを収縮状態の搬送形状から拡張させて配備形状を取らせる手段として、内側シャフトと外側シャフトを移動させることにより該遠位接続部材と該近位接続部材とを近寄せする方法が採用されており、
該カテーテルの内側シャフトおよび外側シャフトを離隔させることにより、該バスケットを収縮するように構成されている、請求項６に記載の装置。
【請求項８】
該複数の電極により供給された電界としては、連続電界またはパルス電界が挙げられる、請求項１から請求項７のいずれかに記載の装置。
【請求項９】
該複数の電極は該バスケットの支柱または部材の内面または外面に取り付けられているか、または、該バスケットの支柱または部材に埋設されている、請求項１から請求項８のいずれかに記載の装置。
【請求項１０】
該バスケットの支柱または部材の各々に沿って配置される該複数の電極としては、単独電極、共通でありながら分離された電極、または、共通でしかも連続している電極が挙げられる、請求項１から請求項９のいずれかに記載の装置。

【請求項１１】
該複数の電極はそれぞれの位置をダイナミックに割り当てすることができる、請求項１から請求項１０のいずれかに記載の装置。
【請求項１２】
該複数の電極は双極式に使用するように構成されている、請求項１から請求項１１のいずれかに記載の装置。
【請求項１３】
該複数の電極はその全部が、または、その部分集合が単極式に使用するように構成されている、請求項１から請求項１１のいずれかに記載の装置。
【請求項１４】
該複数の電極は神経調節前、神経調節中、または、神経調節後に腎臓神経を刺激する処置を容易にすることで、該カテーテルの設置、処置の効果の監視、または、その両方を容易にするよう構成されている、請求項１から請求項１３のいずれかに記載の装置。
【請求項１５】
被検体の体外に設置する電界発生器を更に有している、請求項１から請求項１４のいずれかに記載の装置。
【発明の詳細な説明】
【技術分野】
【０００１】
＜関連出願との相互参照＞
本願は2004年10月5日出願の米国特許仮出願連続番号第60/616,254号と2004年11月2日出願の米国特許仮出願連続番号第60/624,793号のそれぞれの出願日の優先権を主張するものであり、引例に挙げることにより両出願の開示内容はその全体が本明細書の一部を成しているものとする。更に、本願は2003年4月8日出願の同時係属中の米国特許出願連続番号第10/408,665号の部分継続出願であり、かかる出願は2003年11月20日に米国特許公開2003/0216792号として公開されており、また、かかる出願は2002年4月8日出願の米国特許仮出願連続番号第60/370,190号、2002年10月3日出願の第60/415,575号、2003年1月29日出願の第60/442,970号の出願日の優先権を主張するものであり、引例に挙げることによりこれら出願は全てその全体が本明細書の一部を成すものとする。
【０００２】
＜引例による開示内容の組み込み＞
本明細書に言及されている刊行物や特許出願は全て、個々の刊行物または特許出願の内容が詳細かつ個別的に言及されることにより本明細書の文書内容の一部を構成している場合と同じ程度に、タイトルまたは番号に言及するだけで本明細書の一部を構成しているものとする。
【０００３】
本発明は腎臓神経調節法およびその装置に関するものである。特に、本発明は、拍動式の電界および／または電気穿孔法もしくは電気融着法により、腎臓の神経調節を達成する方法をよい装置に関連している。
【背景技術】
【０００４】
鬱血性心不全（CHF）は、心臓が損傷を受けた場合に発生して体器官へ送られる血流を低減してしまう症状をいう。血流が相当に低減してしまうと、腎機能は機能不全となり、体液停滞、ホルモン分泌異常、血管狭窄の増大を生じる結果となる。このような結果は心臓の作業負荷を増大し、腎臓および循環系を介して血液を汲み上げる心臓の能力を更に減退させる。
【０００５】
このように減退された能力は腎臓におくる血流を更に低減し、これが更に心臓の能力を低下させることになる。腎臓の灌流を漸進的に減少させることが心臓病に因らない主たる原因となって鬱血性心不全の下降螺旋を恒常化させると思われる。更に、流体過負荷とこ

れに付随する、上述のような生理学的変化の結果として起こる臨床症候が支配的原因となって、鬱血性心不全には度を越えた入院費、生活の質のひどい低下、健康管理システムに要する圧倒的な費用が必要となる。

【０００６】

多数の異なる疾病が初期的に心臓に損傷を及ぼすものの、鬱血性心不全は、ひとたび起こってしまうと、２種類に分離される。すなわち、慢性鬱血性心不全と急性（または、代償不全慢性）鬱血性心不全に分かれる。慢性鬱血性心不全は長期的かつ緩進行性の変成疾患である。何年かで、慢性鬱血性心不全は心不全を引き起こす。慢性鬱血性心不全を臨床的に分類する場合は、患者の運動する能力または患者の日常生活を行う能力（例えば、ニューヨーク心臓協会機能分類（New York Heart Association Functional Class）によって規定されている能力）に基づいて分類される。慢性鬱血性心不全の患者は、通常、通院で管理され、薬物を使うのが最もありふれている。

【０００７】

慢性鬱血性心不全患者は、突然のひどい心臓機能低下を経験することがあるが、これは急性鬱血性心不全と呼ばれ、心臓は生体の活動する器官を養うのに十分な血流と血圧を維持することができなくなる。このような急性鬱血性心不全による機能低下が起こるのは、余分な圧迫（感染や過剰な流体の過負荷など）が安定した慢性鬱血性心不全患者の心臓にかかる作業負荷を著しく増大させた時である。慢性鬱血性心不全の段階的で衰退気味の進行に比べて、急性鬱血性心不全を患っている患者は鬱血性心不全の最も早期の段階からすでに機能低下を起こし、ひどい血流急落に至る。更に、急性鬱血性心不全は、心臓の筋肉に対する唐突かつ回復不能な損傷で「心臓発作」と広く呼ばれている急性心筋梗塞（AMI）の数時間後または数日後の内に起こることがある。

【０００８】

上述のように、腎臓は慢性腎不全（CRF）、末期腎不全（ESRD）、高血圧症（病理学的に高い血圧）、それ以外の各種心腎疾患の進行に重要な役割を果たしているばかりか、鬱血性心不全（CHF）の進行にも重要な役割を果たしている。腎臓の諸機能は３つの広い範疇に基づいて概略説明することができ、その３つの範疇とはすなわち、血液濾過および肉体の代謝作用によって生成された老廃物の放出、塩と水分と電解質と酸－塩基平衡の調節と、活動する器官の血流維持のためのホルモン分泌である。適切に機能している腎臓がなければ、患者は水分停滞、尿の流れの低下、血中および体内における有害老廃物の蓄積に罹る。腎機能低下または腎疾患（腎不全）が原因で起こるこのような諸症状は心臓の作業負荷を増大させると考えられている。鬱血性心不全患者では、機能低下した腎臓のせいで水分が蓄積して越中有害物質が累積すると、腎不全により心臓は更に機能低下し、延いては、心臓に更に危害を及ぼす。

【０００９】

尿生成に関与する腎臓の主要機能単位は「ネフロン」と呼ばれる。腎臓は１個あたり約100万個のネフロンから構成されている。ネフロンは糸球体およびその複数細管から作られており、これらは多数の部分に区分けされ、すなわち、近位細管、中位係蹄（ヘンレの係蹄）、および、遠位細管に分離される。ネフロンは各々が、幾つかの物質およびホルモン（例えば、レニン、エリスロポイエチンなど）を分泌する能力を備えている複数の互いに異なる種類の細胞によって包囲されている。血液から血漿水を濾過して糸球体に流し込むことで始まる複雑なプロセスの結果として、尿が生成される。糸球体の壁は水と分子に対して十分な透過性があるが、蛋白質分子と大型分子についてはほぼ不透過性を示す。従って、健康な腎臓では、濾過後の液には、事実上、蛋白質が皆無であり、細胞要素も含まれていない。最終的に尿になる濾過された液は細管を通って流れる。尿の最終化学成分は、生体恒常性を維持するのに必要な尿中へ分泌し、そのような尿から物質を再吸収した後で測定される。

【００１０】

心送血量の約20％を受取ったとして、２個の腎臓は１分あたり約125ミリリットルの血漿水を濾過する。濾過が起こる原因は、糸球体膜にかかる圧力勾配である。腎動脈内の圧

力が血漿水を糸球体の中に押込み、濾過を生じる。糸球体濾過率（GFR）を比較的一定に保つために、糸球体内の圧力は、導入動脈および導出動脈、すなわち、糸球体に入るまたは糸球体から出る筋性の壁で囲われた血管の収縮または拡張によって一定に保たれる。

【００１１】

鬱血性心不全（CHF）患者では、心臓は徐々に衰え、血流と血圧は患者の循環系内で降下する。急性心不全の最中は、短期補償作用が働いて、血流が長く低下するのに耐えられない脳や心臓のような重要な器官に潅流を維持する。しかしながら、急性心不全の最中に生存への闘いを初期的に補佐する、これと同じ反応が、慢性心不全の最中には有害な反応となる。

【００１２】

複数の複雑なメカニズムが組み合わされることが一因となって、鬱血性心不全（CHF）の有害な流体過負荷が起こる。心臓が機能不全となって血圧が降下すると、腎臓は、潅流を得るには血圧が不十分となるせいで働くことができず、機能不全となる。腎機能がこのような機能不全状態になった結果、最終的には尿出量が減少する。十分な尿出量が無ければ、肉体は体液を溜め込み、その結果として生じる体液過負荷が原因となって、多数の望ましくない症状の中でもとりわけ、末梢組織の浮腫（脚部のむくみ）、息切れ（肺の中の体液を原因とする）、および、腹部内の体液鬱滞が患者に起こる。

【００１３】

更に、心送血量の減少により腎臓血流が低下し、神経ホルモン刺激が増大し、腎臓の傍糸球体装置からホルモンレニンが放出されることになる。この結果、ナトリウムの大量停留を生じ、従って、体積膨張を生じる。レニンが増大した結果、アンギオテンシン、すなわち、強力な血管収縮物質を生成する。心不全とその結果として生じる血圧低下も、腎臓ではなくむしろ他の体内器官内の血流と潅流圧を低減する。このような体内の器官は、血圧が低下すると、低酸素症となり、結果的に代謝酸毒症を起こし、これが薬理学治療の効果を低下させ、突然死の危険が増大する。

【００１４】

心不全患者について医者が観察するところの上述のような機能低下の悪循環の少なくとも一部に、レニン－アンギオテンシンシステムとして周知の心臓機能と腎臓機能との微妙な相互作用の働きが介在していると思われる。心臓の血液圧出機能の障害は、心送血量の低減と血流の減少とを生じる結果となる。この血流減少に対して腎臓は総血液量が減少してしまったかのように反応するが、そういった場合でも、実際には、測定された血液量は正常であるか、むしろ増大している。これにより腎臓による体液鬱滞やむくみの形成が起こり、それにより、体液過負荷や心臓にかかる圧迫が増大する。

【００１５】

体系的には、鬱血性心不全（CHF）は異常に上昇した末梢血管抵抗に付随し、交感神経系機能の激しい障害が原因で起こる血行の変性を特徴とする。交感神経系の活動が上昇することで、動脈血管収縮が増進（血液流に対して血管抵抗が増大）した後に心送血量が更に低下するという、衰退に向かう悪循環に拍車がかかり、生きている器官に流れ込む血液流の量を一層減少させてしまいさえする。

【００１６】

先に説明した血管収縮のメカニズムによる鬱血性心不全では、心臓と循環系は腎臓に送る血液流を劇的に低下させている。鬱血性心不全の間、腎臓は神経経路とホルモン伝令とにより、より高位の神経中枢から指令を得て、体内に体液とナトリウムを停滞させる。心臓にかかる圧迫に応答して、神経中枢は濾過機能を低下させるように腎臓に指令を出す。短期間のうちならば、このような指令も有効であるかもしれないが、このような指令が数時間や数日間に亘って続くと人命を脅かしかねず、または、腎臓機能を終焉させてしまうことで生存のために人工腎臓に頼らざるを得ないようにしてしまう恐れがある。

【００１７】

腎臓が血液を十分に濾過しない場合、大量の体液が体内に鬱滞し、この結果として鼓脹（組織内の体液鬱滞）を生じ、心臓の作業負荷を増大させてしまう。体液が肺の中に浸透

することもあり、患者は息切れを起こす。この奇妙で自己破壊的現象を説明するには、出血といったような一時的障害の兆候として鬱血性心不全（CHF）の慢性的低血圧を認知しきれない肉体の正常な補償メカニズムの効果をもってするのが最もよさそうである。

【００１８】

深刻な事態では、肉体は最も敏活な器官、すなわち、脳と心臓を酸素欠乏の危険から保護しようとする。指令は神経経路とホルモン経路と伝令とによって発せられる。このような指令は脳と心臓に対して血圧を維持するという目標に向けて出される。脳と心臓はちょっとした期間でも低潅流にも持ちこたえることができない。これらの器官に対する血圧が容認できないレベルまで低下してしまうと、発作または心臓発作が生じる結果となる。それ以外の器官で、例えば腎臓などは、虚血期間がもっと長くても幾分か持ちこたえることができて、長期損傷を被らずに済む。従って、肉体はこれら腎臓のような器官への血液供給を犠牲にして、脳と心臓の存命を図る。

【００１９】

鬱血性心不全（CHF）が原因で起こる血流力学的障害は、レニン－アンギオテンシン－アルドステロン系、交感神経副腎系などのような幾つかの神経ホルモン系を活性化させ、ヴァソプレシン放出を促す。腎臓の血管収縮が増進すると、糸球体濾過率（GFR）が降下し、循環系におけるナトリウム負荷が増える。同時に、腎臓の傍糸球体からより多量のレニンが放出される。腎機能低下の複合効果には、糸球体ナトリウム負荷の低下、アルドステロンが仲介するナトリウムの細管再吸収、体内におけるナトリウムおよび水分の鬱滞などが含まれる。このような効果はやがて、腎臓における体液およびナトリウムの鬱滞を根本原因とする心臓腫脹、心収縮期壁圧迫の増大、心筋酸需要の増大、むくみの形成などを含む鬱血性心不全症状の幾つかの兆候および症候に至る。従って、腎臓血流において持続する鬱滞と血管収縮の直接責任は、鬱血性心不全に付随する体液鬱滞の発生にある。

【００２０】

鬱血性心不全（CHF）は進行性であり、今現在のところ、治癒不能である。薬物治療の限界と、薬物治療しても鬱血性心不全患者の機能低下を快方に向かわせることが不可能なばかりか、機能低下を完全阻止してしまうことさえ不可能なのは明白である。外科手術治療は場合によっては効果があるが、付随する危険と経費のせいで、末期段階の患者集団に限定されている。更に、鬱血性心不全患者の機能低下について腎臓が果たす劇的役割は、現在の外科手術治療によっては適切に扱われない。

【００２１】

自律神経系は、血液流バランスと血圧を維持するのに重要な肉体諸機能の調節を司る信号を制御するのに重要な経路であると認識されている。自律神経系は、圧受容器（血液の圧力と体積に応答する）や化学受容器（血液の各種化学成分に反応する）のような肉体の生物学的センサーから神経系の感覚線維を介して中枢神経系に信号の形態を呈している情報を伝送する。自律神経系はまた、血管系の多様な神経分布成分を運動神経線維を介して制御する中枢神経系からの指令信号を伝送する。

【００２２】

人間の腎臓移植に関する経験は、腎臓機能における神経系の役割のはしりとなる証拠を提示していた。移植後も、全ての腎臓神経が全面的に断ち切られても、腎臓は水とナトリウムの排出を増進させていた。このような現象は、腎臓神経が切断された場合や、化学的に破壊されてしまった場合の動物でも観察された。この現象は「神経除去性利尿」と呼ばれるが、それは、神経除去が腎臓に利尿薬と類似する作用をもたらしたからである。後に、「神経除去性利尿」は、腎臓を流れる血液流の増進をもたらす腎臓動脈系の血管拡張に付随するものであることが分かった。このような観察は、腎臓に血圧低下を起こすことで「神経除去性利尿」の作用を後退させるという動物実験における観察によって確認された。

【００２３】

移植外科手術が成功裡に終わってから数ヵ月後に、移植被験者の「神経除去性利尿」が呈しして腎機能が正常に戻ったということも観察された。元来、「腎臓利尿」は過渡現象

であり、中枢神経系から腎臓に信号を伝送する神経は腎臓機能に不可欠なものではないと思われていた。その後の発見が暗示するものは、腎臓神経が再生する深甚な能力を備えており、「神経除去性利尿」の作用を打ち消してしまうことが一因となって、必要な刺激を与えれば腎臓に新生神経線維を成長させることができるという点であった。

【００２４】

また別な一連の研究は、腎臓によってホルモンレニンの分泌を神経制御するという役割に注目している。先に述べたように、レニンは心不全患者における血管収縮と水およびナトリウムの鬱滞の「悪循環」の原因となるホルモンである。腎臓の交感神経活動を増進または後進させることで、腎臓によるレニン分泌率の増大および減少がそれぞれ平行して実現されたことが示された。

【００２５】

要約すると、臨床経験と大量の動物実験から、腎臓の交感神経活動の増進が腎臓に供給する血液血管の血管収縮の原因となり、腎臓の交感神経活動の後進が体内からの水とナトリウムの排出量低減とレニン分泌の上昇の原因となっているのが分かった。例えば神経除去などによって腎臓の交感神経活動を低下させることで、上述のプロセスを逆転させることができる。

【００２６】

心不全の症状の結果として腎臓の交感神経刺激の異常高騰が起こることが、動物モデルで確認されている。このような現象を追跡した結果、圧受容体から中枢神経系に信号を伝送する感覚神経が原因であると突き止められた。圧受容体は血管系の複数の異なる部位に存在している。頸動脈の圧受容体（脳に動脈血を供給する）と腎臓への交感神経刺激の間には強力な関係が存在する。心不全を患う実験動物で動脈血圧が突然低下すると、交感神経の調子が上がる。それにも関わらず、慢性の鬱血性心不全（CHF）患者では、正常な圧反射が単独で腎臓神経活動の上昇の原因となることはなさそうである。長時間に亘って動脈血圧レベルが低下すると、圧受容体は通常は「リセット」され、すなわち、活動の基準レベルに戻り、新たな障害が導入されるまでそのままである。よって、鬱血性心不全患者では、血圧の制御と腎臓機能の神経制御の責任を負う自律神経系の構成要素は正常でなくなると思われている。この異常性の原因となる厳密なメカニズムは十分には理解されてはいないが、鬱血性心不全患者の全体的症状に及ぼす効果は甚大に有害である。

【００２７】

末期腎不全（ESRD）は、腎臓神経活動によって少なくとも一部が制御されているまた別な症候である。糖尿病性腎症、慢性糸球体腎炎、および、コントロールの効かない高血圧のせいで、末期腎不全を患っている患者数が劇的に増大している。慢性腎不全（CRF）がゆっくりと進行して末期腎不全になる。慢性腎不全は末期腎不全の進行におけるきわどい段階を表している。慢性腎不全の兆候と症候は初期的には軽症であるが、2年から5年を経過すると、進行性となり回復の見込みが無くなる。末期腎不全に向かう病気の進行と闘ったり末期腎不全の合併症と闘う際に何らかの進展があっても、既存の介在処置の臨床的効果は限られたままである。

【００２８】

広範な病因（高血圧、感染、外傷、自己免疫疾患など）の腎不全が原因となって、全身性高血圧症、蛋白尿症（血液から尿中に濾過して出される蛋白過剰症）、糸球体濾過率（GFR）の漸進的下落を特徴とする慢性腎不全（CRF）症候が生じ、その結果として最終的に末期腎不全（ESRD）になることが、ここ数十年で分かってきている。このような観察が暗示しているのは、共通するメカニズム経路を辿っての慢性腎不全の進行と、このような共通経路を抑止する治療介在処置とが初発的原因とは無関係に慢性腎不全の進行速度を低下させるのに成功するかもしないということである。

【００２９】

慢性腎不全（CRF）の悪循環の手始めに、腎臓に対する初期傷害が或る量のネフロンの喪失を引き起こす。正常な糸球体濾過率（GFR）を維持するために、残余のネフロンに過剰濾過の状態を引き起こす結果となる補償腎臓メカニズムと補償全身性メカニズムの活動

がある。しかし、最終的には、過剰濾過によって「働きすぎ」で損傷を受けたより多くのネフロンが喪失される。或る時点で、十分な数のネフロンが喪失されて、正常な糸球体濾過率はもはや維持され得なくなる。このような慢性腎不全の病理学的変化が全身性高血圧症の悪化を生み、従って、糸球体内高圧症と過剰濾過の増進を生じる。慢性腎不全で糸球体の過剰濾過が進み、透過率が増大すると、より多量の蛋白が血液から糸球体を介して腎臓の細管内に押出される。このような蛋白は細管にとって直接有害となり、ネフロンを更に喪失させ、慢性腎不全の進行速度を高める。更にネフロンが喪失されたのに伴って糸球体濾過率が低下しても、このような慢性腎不全の悪循環が継続し、過剰濾過が更に進んで最終的に末期腎不全（ESRD）を起こし、透析の必要が生じる。臨床的には、高血圧症と過剰蛋白濾過は慢性腎不全の末期腎不全へ至る進行速度の２つの主要な判定因子であることが分かっている。

【発明の概要】

【発明が解決しようとする課題】

【００３０】

先に臨床的に分かっていたことではあるが、高血圧症、蛋白尿症、ネフロン喪失と慢性腎不全（CRF）の間の生理学的結びつきが初めて認識されたのは1980年代になってからであった。1990年代には、交感神経系活動の役割が解明された。機械受容体と化学受容体の活動のせいで損傷した腎臓から発生して入ってきた信号が、血圧制御を司る脳の領域を刺激する。これに反応して、脳は全身レベルで交感神経刺激を増大させ、その結果として、主として血管の収縮により血圧が上昇する。交感神経の刺激の上昇が導出側の交感神経線維によって腎臓に達すると、腎臓は２つの形式の深刻な有害効果を生じる。腎臓は、高血圧とは無関係に、腎臓の交感神経伝達物質（例えば、ノルエピネフリンなど）の放出による直接的な腎臓毒性によって損傷を受ける。更に、アンギオテンシンIIを活性化させるレニンの分泌が増大し、これにより、全身性血管収縮を増進するとともに、高血圧を激化させる。

【００３１】

時間経過とともに、腎臓に対する損傷は腎臓から脳へ送る導出側の交感神経信号を更に増長させる。上昇したアンギオテンシンIIは神経伝達物質が腎臓内で放出されるのを更に促進する。よって、フィードバックループが閉じて、これが腎臓の機能低下を加速させる。

【００３２】

前述の事柄に鑑みて、鬱血性心不全、腎不全、高血圧症、および／または、それ以外の心腎疾患を、腎臓神経調節および／または腎臓神経除去により治療する方法およびその装置を提供するのが望ましい。

【課題を解決するための手段】

【００３３】

本発明は、パルス出力電界（PEF）を利用した腎臓神経調節法（例えば、神経除去法）およびその装置を提供する。本発明の幾つかの局面がパルス出力電界を付与することで、腎臓神経や腎臓神経機能に寄与する神経線維やそれ以外の神経線維に電気穿孔および／または電気溶融を実施する。本発明の幾つかの実施形態は、腎臓神経調節を誘導する血管内装置である。本明細書に記載されている装置と方法は、神経除去などの神経調節を達成し、かつ／または、それ以外の方法で電気穿孔効果および／または電気溶融効果をもたらす好適な電気信号パラメータまたは電界パラメータを利用することができる。例えば、電気信号は、電気穿孔を実施する目的でナノ秒パルス出力電界（nsPEF）および／またはパルス出力電界（PEF）を組み入れることができる。特殊な一実施形態は、第１の経路のパルス出力電界による電気穿孔術を施したのに続いて第２の経路のナノ秒パルス出力電界による電気穿孔術を施し、パルス出力電界の後に細胞がどれも無傷のままアポプトーシスで自滅するのを誘発する工程、または、電気穿孔術を施す順番を逆にしただけの同じ工程を含んでいる。代替の実施形態は、電気衝撃を遂行する神経の能力を低減または除去することが期待されるような態様でパルス出力電界を付与することにより、神経細胞を溶融する工

程を含んでいる。このような方法および装置は腎臓の神経線維および／または腎臓の神経機能に寄与するそれ以外の神経線維に適用された場合の本発明は、鬱血性心不全、高血圧症、腎臓系各種疾患、それ以外の腎臓障害を防止または治療する態様で、尿排出量が増大し、かつ／または、血圧が抑制される。

【００３４】

特定の実施形態の幾つかの局面は、パルス出力電界および／またはナノ秒パルス出力電界に好適なパラメータを選択することにより、上述のような結果を達成することができる。パルス出力電界の各種パラメータには、電界強度、パルス幅、パルスの形状、パルスの数、および／または、パルス間隔（例えば、デューティーサイクル）などがあるが、これらに限定されない。好適な電界強度には、例えば、１センチメートルあたり約1万ボルト（10,000 V/cm）までの各レベルの強度が含まれる。好適なパルス幅には、例えば、約１秒までの各種長さの幅が含まれる。パルス波形の好適な形状には、例えば、直流波形、正弦波、余弦波、正弦波と余弦波の組合せ、直流波形、直流シフトされた交流波形、高周波波形、方形波、台形波、指数関数的減衰波、これらの組合せなどが含まれる。好適なパルス数としては、例えば、少なくとも１個である。好適なパルス間隔としては、例えば、約10秒未満の間隔である。所望に応じて、これらパラメータをどのように組合せて利用してもよい。このようなパラメータは例示を目的として提示されているのであって、決して限定すると解釈するべきではない。これ以外の代替の波形パラメータは自明である。

【００３５】

幾つかの実施形態は、長期持続する神経除去を施して急性心筋梗塞（AMI）の拡大を最小限に抑え、かつ、鬱血性心不全に付随する組織形態の変化の発現を阻止するのを助ける経皮経管システムを目的としている。例えば、本発明の一実施形態は、例えば、心臓血管形成術および／またはステント設置術などによって患者の梗塞形成を治療する工程と、経動脈パルス出力電界による腎臓神経除去処置をＸ線透視ガイダンスの元で実施する工程とを含んでいる。これに代わる例として、パルス出力電界治療は、急性心筋梗塞部が安定した直後の別な期間に行うことができる。腎臓神経調節はまた、腎臓外科手術処置の補足治療として採用されてもよい。このような実施形態では、腎臓のパルス出力電界治療によって供与される尿排出量および／または血圧抑制の予測される増進によって、梗塞の拡大を抑止するとともに鬱血性心不全を阻止するために心臓にかかる負荷を低減することが期待される。

【００３６】

本件に記載されている経管パルス出力電界システムの幾つかの実施形態は、梗塞直後または梗塞後なんどきでも、腎臓神経系の神経除去を行い、または、腎臓神経系の活動を低下させることができるにも関わらず、患者の体内に恒久的に移植片を残存させなくてもよい。このような実施形態は、患者の心臓が治癒に向かう期間である数ヶ月の間、尿排出量を増大させ、かつ／または、血圧を抑制すると期待される。このような治癒期間の後に反復神経調節および／または長期神経調節が有益であると判断された場合には、腎臓パルス出力電界治療は必要に応じて繰り返されてもよい。

【００３７】

急性心筋梗塞（AMI）を効果的に治療するのに加えて、本件に記載されているシステムの幾つかの実施形態はまた、鬱血性心不全（CHF）、高血圧、腎不全、それ以外の、腎臓交感神経活動の影響や作用による腎臓疾患や心腎疾患などを治療するものとも期待される。例えば、血管構造を通して治療部位までパルス出力電界システムを進入させてから治療部位にパルス出力電界治療を行うことにより、いつでも鬱血性心不全を治療するために本件の各種システムを利用することができる。これは、例えば、流体負荷除去のレベルを調節することができる。

【００３８】

本件に記載されている経管パルス出力電界システムの各種実施形態は、当該技術で周知である血管形成カテーテルまたは電気生理学的カテーテルと同様に用いることができる。例えば、標準的なセルジンガー技術により、動脈接近を行うことができるが、任意で、動

脈鞘部材を設置してカテーテル接近を施すようにしてもよい。ガイドワイヤを血管を通して患者の腎臓動脈内に進入させた後に、このガイドワイヤの上を伝って、さらに／または、鞘部材の中を経管パルス出力電界システムに前進させ、腎臓動脈内に侵入させるようにしてもよい。任意で、パルス出力電界カテーテルを挿入する前に鞘部材を設置してもよいし、または、パルス出力電界カテーテルと一緒に鞘部材を前進させて、鞘部材の一部または全部がカテーテルを被覆するようにしてもよい。これに代わる例として、パルス出力電界カテーテルは、ガイドワイヤを使用せずに血管を通して直接進入させられてもよいし、かつ／または、鞘部材無しで血管内に導入して前進させられてもよい。

【００３９】

動脈設置に加えて、パルス出力電界システムは静脈内部に設置することもできる。静脈接近は、例えば、頸部接近法により達成することができる。パルス出力電界システムは、例えば、腎臓動脈内で利用したり、腎臓静脈内で利用したり、または、腎臓動脈と腎臓静脈の両方の内部で利用して、より完全な神経除去を促進することができる。

【００４０】

パルス出力電界カテーテルは、標的ニューロンに相関的に血管内の所望の位置に設置された後で、血管内で安定した状態にされ（例えば、血管壁に鏃で留められる）てから、標的神経または標的ニューロンにエネルギーが伝達される。一変形例では、パルス出力高周波エネルギーが標的部位に伝達されて、非熱的な神経遮断部を設け、神経信号発信を低減し、または、それ以外の態様で神経活動を調節する。これに代わる例として、または、これに加えて、低温化、極低温化、熱高周波、熱マイクロ波または非熱マイクロ波、指向式超音波または非指向式超音波、熱直流または非熱直流のほかに、これらの各種組合せを採用して、神経信号発信を低減し、または、それ以外の態様で神経信号発信を制御するようにしてもよい。

【００４１】

本発明のまた別な実施形態では、神経構造体に加えて、または、腎臓神経構造体の代わりに、腎臓以外の他の神経構造体を標的として、腎臓動脈導管または静脈導管の内側から接近するようにしてもよい。例えば、パルス出力電界カテーテルは大動脈または大静脈を通して操舵され、多様な神経構造体と並置されて、上記以外の諸症状を治療し、または、各種心腎障害の治療に着手することができる。例えば、腰交感神経連鎖群にこのような態様で接近し、調節し、遮断し、融除し、または、それ以外の処置を行うことができる。

【００４２】

パルス出力電界システムの幾つかの実施形態は標的神経構造体を完全に遮断または神経除去することができ、またそうでなければ、パルス出力電界システムは腎臓神経活動を調節することができる。神経除去のような完全な神経遮断とは異なり、これ以外の神経調節は、腎臓（一方または両方）と肉体の残りの部分との間の腎臓神経活動のレベルに完全ではない変化を生じる。従って、パルス出力電界パラメータを変動させることで、神経活動に複数の異なる効果を生じることになる。

【００４３】

経管パルス出力電界システムの一実施形態では、装置は１個以上の電極を備えており、これら電極はパルス出力電界を設けるために腎臓血管の標的領域に物理的に接触する配置になっている。例えば、装置は、拡張可能な螺旋部と該螺旋部の１個以上の電極部とを備えているようにすることができる。カテーテルは、低プロファイル構成を呈したまま腎臓血管内に設置される。次いで、拡張可能部が拡張状態となって、血管壁の内面に接触することができる。代替例として、カテーテルが１個以上の拡張可能な螺旋電極部を備えているようにしてもよい。例えば、第１の拡張可能電極部と第２の拡張可能電極部は血管内で互いから所望の距離を隔てて設置され、活性電極と帰還電極を設けることができる。拡張可能電極部としてはそれぞれが、形状記憶部材、膨張可能バルーン、拡張可能メッシュ材、連結システム、それ以外のタイプの、抑制された態様で拡張することのできる装置などであればよい。好適な拡張可能連結システムには拡張可能バスケットがあり、これは複数の形状記憶ワイヤまたはスロットが設けられた複数のハイポチューブ、および／または、

複数の拡張可能リングを備えている。これに加えて、拡張可能電極は、カテーテルのバルーン部に沿って配置された点接触電極であってもよい。

【００４４】

パルス出力電界の別な実施形態は、血管壁に物理的に接触しない電極を備えている。高周波エネルギー、すなわち、従来型の熱エネルギーと比較的非熱性のパルス出力高周波エネルギーの両方が、治療を施すべき組織それ自体から短距離だけ離隔した位置から組織に伝達することができるパルス出力電界の具体例である。これ以外のタイプのパルス出力電界も、電極が血管壁に物理的に接触しない状況で使うことができる。このように、電極接点と血管壁またはそれ以外の組織との間の物理的接触により、直接的に神経にパルス出力電界を付与することができ、または、電極接点を血管壁に物理的に接触させずに、間接的に神経にパルス出力電界を与えることができる。従って、「神経接触」という語は、システム素子が神経および／または神経の近位の組織と物理的接触することを含んでいるとともに、神経または組織と物理的に接触せずに電気接触するだけのことも含んでいる。パルス出力電界を間接付与するために、装置は中心決め部材を備えており、かかる素子は血管の中央領域に電極を設置するよう構成されているか、またそうでなければ、血管壁から電極を離隔させる構成になっている。中心決め装置は、例えば、バルーンまたは拡張可能バスケットを備えている。１個以上の電極が中心決め部材の中央シャフト上に搭載されるが、この場合、素子と長軸線方向に整列状態になるか、または、素子のどちらであれ片側に設置されるか、いずれかである。バルーンカテーテルを利用した場合、膨張状態のバルーンが増大したインピーダンスの絶縁体として作用し、所望の電気流路に沿ってパルス出力電界を配向させる、すなわち、方向づけることができる。

【００４５】

このシステムのまた別な実施形態では、組合せ装置は経管カテーテルを備えており、このカテーテルの第１電極は血管壁と物理的接触する構成であり、その第２電極は血管壁の内側に設置されるものの血管壁から離隔される構成である。例えば、拡張可能な螺旋電極は中央に配置された電極と組合せて使用されて、上述のようなバイポーラ電極対を設けるようにしてもよい。

【００４６】

また別な実施形態では、１個以上の電極の、血管壁に対する放射線方向位置はダイナミックに変動させることで、電極によって生み出されたパルス出力電界に指向性を持たせることができる。また別な変形例では、電極は血管壁の一部または全部を横断するよう構成されていてもよい。例えば、電極（単数または複数）は腎静脈の内側に設置されてから、腎静脈の壁を横断させられて血管内周の空間に添うようにし、パルス出力電界を設ける前に、電極の少なくとも一部が腎動脈および／または腎静脈の内周を廻るように配置してもよい。

【００４７】

本発明のバイポーラ式実施形態は、活性電極と接地電極の間の間隔に相対しダイナミックな動きまたは動作をすることで所望距離、所望体積、または、それ以外の所望寸法にわたって治療を達成するよう構成されていてもよい。例えば、複数の電極は、バイポーラ電極対が互いに対して長軸線方向に移動することで電極間の離隔距離を調節し、かつ／または、治療部位を変動させるように配置してもよい。或る特殊な実施形態は、カテーテルに連結された第１電極と、カテーテルの管腔の中を移動することのできる可動第２電極とを備えている。代替の実施形態では、第１電極はカテーテルに装着することができ、第２電極は血管内を搬送される装置に装着することができるため、第１電極と第２電極が互いに相関的に位置整復されることで、電極間の離隔距離を買えることができるようになっている。このような実施形態は、多様な腎臓血管の解剖学的構造の治療を容易にする。

【００４８】

本件に記載されている本発明の実施形態はいずれも、任意で、エネルギー供与前、エネルギー供与中、または、エネルギー供与後に治療領域に薬剤を注入するような構成になっていてもよい。注入薬剤は選択によりエネルギー供与の神経調節効果を向上または変更す

ることができる。このような薬剤はまた、標的ではない細胞を保護したり一時的に退避させることができ、かつ／または、視認化を促進することができる。

【００４９】

本発明の幾つかの実施形態は、治療のために位置の識別を容易にし、かつ／または、治療の成功を判断または確認する検出装置またはそれ以外の素子を備えていてもよい。例えば、システムは刺激波形を発生させて人層真剣の刺激に反応することが分かっている生理学的パラメータを監視するよう構成されていてもよい。監視されたパラメータの結果に基づいて、システムは腎臓神経の位置を判断し、かつ／または、神経除去が起こったか否かを判断することができる。このような生理学的反応を監視する検出装置には、例えば、ドップラー素子、熱電対、圧力センサー、画像物理療法術（例えば、Ｘ線透視術、経管超音波術など）などが含まれる。これに代わる例として、電気穿孔は、例えば電気インピーダンス断層撮像法（ＥＩＴ）またはそれ以外の電気インピーダンス測定法を利用して、直接的に監視されるようにしてもよい。また別な監視技術と監視素子も自明である。このような検出装置はパルス出力電界システムと一体型であってもよいし、或いは、別個の素子であってもよい。

【００５０】

また別な特殊な実施形態は、電界を標的細胞の長いほうの寸法と整列させる構成の電極を備えている。例えば、腎臓細胞は細長い構造であって、縦の長さが横方向寸法（例えば、直径）を遥かに越える傾向がある。電界の伝搬の指向性が細胞の横側面ではなく細胞の縦側面に優先的に影響を及ぼすように電界を整列させることにより、より低い電界強度を利用し標的細胞を殺す、または、機能停止させることができることが予期される。これにより、移植可能な装置の電池寿命を保ち、隣接する構造体に及ぼす付帯的効果を低減し、そうでなくても、標的細胞の神経活動を調節する能力を向上させることが期待される。

【００５１】

本発明のまた別な実施形態は、神経の上に位置する組織、または、神経の下に位置する組織の細胞の縦長寸法が神経細胞の縦長寸法に関して横断方向にある（例えば、直交する、または、直角以外の或る角度をなす）応用例を目的とする。このような実施形態の別な局面は、パルス出力電界が標的細胞の長いほうの寸法および非標的細胞の短いほうの寸法と整列するように、パルス出力電界の指向性整列させることである。より具体的に説明すると、動脈平滑筋細胞は、通例は、概ね螺旋状の配向で動脈周囲を包囲する細長い細胞であるため、それぞれの長いほうの寸法は動脈の長軸線方向に沿って延びているよりはむしろ周方向に延びている。他方で、腎臓血管脈叢の神経は動脈の外側に沿って概ね動脈の長軸線方向に延びている。よって、動脈の長軸線方向に概ね整列状態になるパルス出力電界を付与することで、標的神経細胞に電気穿孔を優先的に起こしながらも、非標的の動脈平滑筋細胞の少なくとも或る部分に同程度の影響を与えることが無いようにするものと予期される。これにより、血管外膜または周辺領域の神経細胞（標的細胞）の神経細胞（標的細胞）に対する優先的な神経除去を経管装置から行い、望ましくない程度まで血管の平滑筋細胞に影響を及ぼすことがないようにすることができる。

【図面の簡単な説明】

【００５２】

【図１】人間の腎臓の解剖学的構造を例示する斜視図である。

【図２】腎動脈に相対的な腎臓神経の位置を例示した概略詳細図である。

【図３Ａ】腎臓神経に選択的に影響を及ぼす目的である電流の流れの方向を例示した概略側面図である。

【図３Ｂ】腎臓神経に選択的に影響を及ぼす目的である電流の流れの方向を例示した概略端面図である。

【図４】本発明の位置実施形態による、複数の電極を設けた経管カテーテルの部分断面概略側面図である。

【図５】本発明の別な実施形態による、1対の拡張する螺旋状電極が互いから所望の距離だけ離隔されて配置された経管装置の部分断面概略側面図である。

【図６】本発明のまた別な実施形態による、第１電極が拡張可能バルーン上に設けられるとともに第２電極がカテーテルシャフト上に設けられている経管装置の部分断面概略側面図である。
【図７】本発明のまた別な実施形態による、拡張する第１電極がカテーテルの管腔の中を搬送されるとともに第１電極と相補的な第２電極がカテーテルに搭載されて運ばれる経管装置の部分断面概略側面図である。
【図８】本発明のまた別な実施形態による、拡張可能バスケットとバスケット付近に設けられた複数の電極を備えている経管装置の部分断面概略側面図である。
【図９】本発明のまた別な実施形態による、電極の一実施形態を例示した、図８の装置の概略詳細図である。
【図１０】本発明のまた別な実施形態による、血管壁と任意の絶縁素子とを接触させるために拡張可能なリング電極を設けた経管装置の部分断面概略側面図である。
【図１１】図１０のリング電極のための複数の互いに異なる巻線の３種類の実施形態の概略詳細図である。
【図１２】図１０のリング電極を図１１に例示された３種類の巻線と一緒に設けた経管装置の部分断面概略側面図である。
【図１３】本発明のまた別な実施形態による、リング電極と血管内搬送される電極とを設けた経管装置の部分断面概略側面図である。
【図１４】本発明のまた別な実施形態による、バルーンカテーテルと拡張可能な点接触電極とがバルーンより近位と遠位とに配置されている経管装置の部分断面概略側面図である。
【図１５】本発明のまた別な実施形態による、バルーンカテーテルと電極とがバルーンより近位と遠位とに配置されている経管装置の概略側面図である。
【図１６】（Ａ）は、本発明の実施形態による、図１５の装置を採用した方法の一工程段を例示した、部分断面概略側面図であり、（Ｂ）は、本発明の実施形態による、図１５の装置を採用した方法の別な工程段を例示した、部分断面概略側面図である。
【図１７】本発明のまた別な実施形態による、バルーンカテーテルと複数のダイナミックに動作可能な電極とを設けた経管装置の概略側面図である。
【図１８】本発明のまた別な実施形態による、経管装置の遠位電極がバルーンカテーテルの管腔の中に配備されているのを例示した概略側面図である。
【図１９Ａ】図１８に例示された経管装置を使い、多様な腎臓血管を有する患者の腎臓神経活動を調節する方法を例示した部分断面側面図である。
【図１９Ｂ】図１８に例示された経管装置を使い、多様な腎臓血管を有する患者の腎臓神経活動を調節する方法を例示した部分断面側面図である。
【図２０】本発明のまた別な実施形態により、経管装置の複数の電極が中心決め部材のシャフト沿いで、尚且つ、中心決め部材と一列に配置されているのを例示した部分断面側面図である。
【図２１】本発明のまた別な実施形態により、経管装置の電極がダイナミックに放射状の位置に整復されて、パルス出力電界に指向性を持たせるのを容易にするよう構成されているのを例示した部分断面側面図である。
【図２２】本発明のまた別な実施形態により、経管装置に注入／吸引カテーテルが設けられているのを例示した部分断面側面図である。
【図２３Ａ】本発明の実施形態による、血管壁を少なくとも部分的に横断して電極を通すようにした構成の経管装置を使用する方法を例示した部分断面側面図である。
【図２３Ｂ】図２３Ａの線Ａ－Ａに沿って破断された断面図である。
【図２３Ｃ】図２３Ａの線Ａ－Ａに沿って破断された断面図である。
【図２４Ａ】本発明のまた別な実施形態による、経管装置に治療効果を測定または監視する検出装置が設けられているのを例示した部分断面側面図である。
【図２４Ｂ】本発明のまた別な実施形態による、経管装置に治療効果を測定または監視する検出装置が設けられているのを例示した部分断面側面図である。

【発明を実施するための形態】
【００５３】
本発明の幾つかの実施形態は、添付の図面と関連付けて理解されれば、後段の詳細な説明を思量すると明瞭となるが、添付図面では同一参照符号は全体を通して同一構成要素について言及している。
【００５４】
＜Ａ．　概観＞
本発明は、腎臓神経調節、および／または、それ以外の腎臓神経調節の方法および装置に関するものである。特に、本発明は、パルス出力電界を利用して電気穿孔または電気融合を実施する、腎臓神経調節の方法および装置に関連している。本件で使用されているように、電気穿孔および電気透過促進は、細胞膜または細胞内装置を操作する方法である。例えば、短い高エネルギーパルスは細胞膜に穿孔を開口させる。細胞膜の有孔率の程度（例えば、穿孔の寸法と数）および穿孔の持続期間（例えば、一時的または恒久的）は、電界強度、パルス幅、デューティーサイクル、電界配向、細胞種類、および、それ以外のパラメータの関数である。一般に、強度の低いほうの電界と幅が短いほうのパルスが終端すると、一般的に自発的に穿孔は閉じる（本件では、「可逆電気穿孔」と定義される）。細胞種類は各々が臨界閾を有しており、そのレベルを越えると穿孔は閉じず、穿孔形成が可逆的ではなくなるが、このような結果は「不可逆電気穿孔」、「不可逆ブレークダウン」、または、「不可逆損傷」と定義される。この時点で、細胞膜は破裂し、かつ／または、高い有孔率によって生じた不可逆化学不均衡が発生する。このような高い有孔率は１個の大きな孔、および／または、複数の小さな孔の結果である場合がある。腎臓神経調節で採用するのにも適切である、或る種の電気穿孔エネルギーパラメータは持続時間がサブマイクロ秒範囲の高電圧パルスであり（ナノ秒パルス出力電界、すなわち、nsPEF）、これにより細胞膜は無傷のままでありながら、細胞死または細胞破壊を引き起こす態様で細胞内装置または細胞の機能を変化させることができる。ナノ秒パルス出力電界の或る応用例が、急性的な細胞死ではなくアポプトーシスによる自滅を誘発することにより細胞死を引き起こすものであることは既に例示した。また、「（構成要素として）備えている、設けられている、含んでいる、～から構成されている（comprising）」という語が本件全体で使用されているが、機能部分を列挙するにあたり、同じ機能部分の個数が多い場合、および／または、別なタイプの機能部分が追加される場合を排除せずに、少なくとも列挙した機能部分を含むことを意味する。
【００５５】
本発明の幾つかの実施形態は、時間が経過すると消失する標的神経の一時的変化、神経機能への連続制御、および／または、神経除去などのような腎臓神経調節を誘発する経管装置を提供する。本件に記載されている装置および方法は、所望の神経調節（例えば、電気穿孔効果など）を達成する、電界（どんな電界であれ）などの好適な信号パラメータまたは電界パラメータを利用することができる。このような神経調節装置を利用する経管装置の構造およびそのような方法をより良く理解するために、人体の腎臓の解剖学的構造を理解するのが有用である。
【００５６】
＜Ｂ．　神経調節法の精選実施形態＞
ここで図１を参照すると、人間の腎構造の腎臓Ｋには腎動脈ＲＡにより酸素添加された血液が供給され、この腎動脈は腹部大動脈ＡＡによって心臓に接続されている。脱酸素化された血液か腎臓を出て、腎静脈ＲＶと下位大静脈ＩＶＣを通って心臓に流入する。図２は腎臓の解剖学的構造の一部をより詳細に例示している。より詳細に述べると、腎構造の腎臓神経ＲＮは、一般的に動脈の血管外膜の内側で、腎動脈ＲＡの長手寸法Ｌ沿いに長軸線方向に延びている。腎動脈ＲＡは、動脈の角度軸θの周囲で、すなわち、動脈の周面の周囲で動脈の内周螺旋を包囲する平滑筋細胞SMCを含んでいる。従って、腎動脈の平滑筋細胞の長手寸法すなわち長い方の寸法は、腎動脈の長尺寸法に対して横断する方向（すなわち、平行な方向ではない）に延びている。腎臓神経の長尺部と平滑筋細胞の長尺部の不

整列は、「細胞不整列」と定義される。

【００５７】

図３を参照すると、腎臓細胞と平滑筋細胞の細胞不整列を活用することで、平滑筋細胞に及ぼされる効果を低減しながら腎臓神経細胞に選択的に影響を与えることができる。より詳細に説明すると、大きな細胞ほど電気穿孔の不可逆閾を超過するのに要するエネルギーが少なくて済むので、本発明の電極の幾つかの実施形態は、電極によって生成される電界の少なくとも一部を、影響を受けることになる細胞の長い方の寸法部と、または、概ねその長尺寸法部と整列させるように構成されている。特殊な実施形態では、経管装置の電極は、腎動脈ＲＡの長尺寸法部と、または、概ねその長尺寸法部と整列状態になる電界を生じることで腎臓神経ＲＮに作用するよう構成されている。電界を整列させて、細胞の直径方向すなわち放射方向ではなく、細胞の長軸線方向に優先的に電界を作用させることで、細胞を壊死させるのに使われる電界強度が少なくて済む。上述のように、これにより、消費電力を低減し、電界内にある標的ではない細胞に及ぼされる効果を低減することが予期される。

【００５８】

同様に、標的神経の上に位置する組織、または、下に位置する組織の長尺寸法部すなわち長い方の寸法部は、神経細胞の長手寸法に対して垂直であるか、またそうでなければ、軸線が外れている（例えば、横断方向である）。従って、パルス出力電界を標的細胞の長尺寸法部すなわち長い方の寸法部と整列させることに加えて、パルス出力電界は標的ではない細胞の横寸法部すなわち短い方の寸法部に沿って伝搬する（すなわち、パルス出力電界は標的ではない平滑筋細胞SMCと少なくとも一部が不整列状態で広がる）。よって、図３で分かるように、伝播線Ｌｉが概ね腎動脈ＲＡの長尺寸法部Ｌと整列している状態でパルス出力電界を付与することで、電気穿孔、電気融合、神経除去、または、標的腎臓神経ＲＮの細胞における上記以外の神経調節を優先的に生じながら、尚且つ、標的ではない動脈の平滑筋細胞SMCには不都合に作用しないことが期待される。パルス出力電界は、腎動脈の長軸線沿いの一平面に広がるようにしてもよいし、または、0度から360度の範囲にわたる角度区分θに沿った長尺方向に伝搬するようにしてもよい。

【００５９】

図３に例示されている方法の実施形態には、本発明の経管法および経管装置を利用した特定の応用例がある。例えば、腎動脈内に設置されるパルス出力電界カテーテルが伝搬する電界の長尺部は腎臓神経ＲＮの領域の動脈と血管壁の平滑筋細胞SMCの長尺寸法部と整列して延在し、動脈の壁が少なくとも実質的に無傷のままでありながら、同時に、外側の神経細胞が破壊されるようにする。

【００６０】

＜Ｃ．　神経調節システムおよびその他の神経調節法の実施形態＞

図４は、本発明による経管パルス出力電界装置２００の１個以上の電極が腎臓血管内の標的領域に物理的に接触して、血管の壁を横断してパルス出力電界を加えている実施形態を例示している。装置２００は患者の腎動脈ＲＡの内部にあるように図示されているが、この装置はこれ以外の血管内部位（例えば、腎静脈）に設置されてもよい。装置２００のこのような実施形態は経管カテーテル２１０を備えており、カテーテルには近位部２１１ａ、遠位部２１１ｂ、遠位部２１１ｂの複数の遠位電極２１２が設けられている。近位部２１１ａは通常はカテーテル２１０をパルス発生装置に連結する電極コネクタを有しており、この実施形態の遠位部２１１ｂは螺旋形状を有している。装置２００は、患者の近位で体外に設置されたパルス出力電界発生装置１００に電気接続されており、電極２１２はカテーテル２１０により電界発生装置に電気接続されている。電界発生装置１００は、後段で説明されるような、所望の電界パラメータでパルス出力電界を加える本発明の実施形態のいずれと併用されてもよい。電界発生装置が各変形例に関して明瞭に図示または説明されていない場合でも、後段で説明する実施形態の電極を電界発生装置と接続することができるものと理解するべきである。

【００６１】

カテーテル２１０の螺旋状の遠位部２１１ｂは、血管壁に並置され、電極２１２を血管外神経構造体に極めて近接させるような構成になっている。螺旋部のピッチを変動させることで、治療区域を長く設けることができ、または、互いに隣接し合う治療区域が周方向に重なり合うのを最小限に抑えることができるようにすることで、狭窄形成の危険を低減することができるように図っている。このピッチの変動を達成する手段として、互いに異なるピッチの複数のカテーテルを組合せること、内部引張りワイヤの使用によりカテーテル２１０のピッチを調節すること、カテーテルに挿入される心棒を調節すること、カテーテルの上に被せて設置される鞘部材を成形することなどの他に、ピッチの変動を装置設置位置でやる手段、または、体内導入前にやる手段の、いずれにせよ好適な手段がある。

【００６２】

ピッチの長尺部に沿った電極２１２は個別の複数電極であってもよいし、１個の共通する区分けされた電極であってもよいし、或いは、１個の共通して切れ目無く連続する電極であってもよい。１個の共通する切れ目無く連続する電極は、例えば、カテーテル２１０の螺旋部の中に形成される導電コイル、または、螺旋部の上に被せて設置される導電コイルであってもよい。１個の共通する区分けされた電極は、例えば、カテーテルの螺旋部の上または中に嵌合するスロットが設けられた管材を設けることにより、または、一連の個別の複数電極を電気接続することにより形成されてもよい。

【００６３】

個別の複数電極または電極群２１２はバイポーラ信号を供与する構成になっていてもよいし、または、全ての電極または一部電極群を患者の体外の別個の複数接地と連携して一緒に使用することで（例えば、接地パッドを患者の脚に取付けてもよい）モノポーラ式使用に付してもよい。電極２１２はダイナミックに割り振られて、どの電極間であれ、かつ／または、電極のうちのどれかと外部接地との間であれ、モノポーラ式のエネルギー伝達および／またはバイポーラ式のエネルギー伝達を容易に行えるようにすることができる。

【００６４】

カテーテル２１０は、鞘部材１５０の内側で低プロファイルの搬送構成で腎動脈ＲＡに搬送される。動脈内に設置されてしまうと、カテーテルは自己拡張することができ、または、例えば引張りワイヤやバルーンなどにより作動的に拡張されて動脈の内壁に接触することもできる。その後、パルス出力電界発生装置１００によりパルス出力電界が生成され、カテーテル２１０により電極２１２に伝達され、更に、電極２１２により動脈の壁を横断して電界が加えられる。大半の応用例では、電極の配置は、パルス出力電界が動脈の長尺寸法部と整列させられて、腎臓神経沿いの神経活動を調節する（例えば、神経除去する）ように設定される。これを達成する手段として、例えば、不可逆電気穿孔、電気融合、および／または、神経細胞におけるアポプトーシスによる自滅の誘導などがある。

【００６５】

図５は、本発明のまた別な実施形態による神経調節用装置２２０を例示している。装置２２０は１対のカテーテル２２２ａ、２２２ｂを備えており、これらカテーテルそれぞれの拡張可能な遠位部２２３ａ、２２３ｂには螺旋状電極２２４ａ、２２４ｂが設けられている。螺旋状電極２２４ａ、２２４ｂは患者の腎臓血管の内側で所望の距離だけ互いから離隔されている。電極２２４ａ、２２４ｂは、１個の電極が活性電極で、他方の電極が帰還電極となるようなバイポーラ様式で作動させることができる。電極と電極の間の距離は所望に応じて変動させることで、電界強度および／または電極によって調節される神経部分の長さを変動させることができる。拡張可能な螺旋状電極は形状記憶特性を備えており、これら特性により、例えば、鞘部材１５０の中に通した後の自己拡張を容易にすることができるようになり、或いは、電極は、例えば、膨張可能なバルーンにより、または、引張りワイヤなどにより、作動的に拡張させられて血管壁と接触することができるようになる。カテーテル２２２ａ、２２２ｂは、電極２２４ａ、２２４ｂの遠位螺旋部以外の領域では電気的に絶縁されるのが好ましい。

【００６６】

図６は、装置２３０のバルーンカテーテル２３２が拡張可能バルーン２３４、バルーン

２３４の周囲に配置された螺旋状電極、および、カテーテル２３２のシャフト上に取付けられたシャフト電極２３８を備えているのを例示している。シャフト電極２３８は図示のように拡張可能なバルーン２３４より近位に配置されてもよいし、或いは、シャフト電極２３８は拡張可能バルーン２３４より遠位に配置されてもよい。

【００６７】

装置２３０が例えば腎動脈ＲＡの内部の標的血管に搬送されると、拡張可能バルーン２３４と螺旋状電極２３６が低プロファイルの搬送形状に配置される。図６で分かるように、装置が所望に応じて設置されてしまうと、拡張可能なバルーン２３４が膨張されて、螺旋状電極２３６を駆動して血管の壁と物理的接触状態にする。この実施形態では、シャフト電極２３８が物理的に血管壁と接触することはない。

【００６８】

従来の熱高周波エネルギー搬送技術と比較的非熱的なパルス出力高周波エネルギー搬送技術の両方の技術分野で、エネルギーを治療するべき組織に伝達するのに、組織そのものから少し距離を置いた位置から伝達することは周知である。従って、「神経接触」には、電気接触のみで物理的接触を欠いている接触のほかにシステム素子の物理的接触を含んでおり、或いは、これら２種類の接触を組合せた接触があることが分かる。任意で、中心決め部材が設けられて、電極を血管の中心領域に位置決めするようにしてもよい。中心決め部材には、例えば、装置２３０のバルーン２３４のような拡張可能バルーンや後段で説明される拡張可能バスケット部材がある。装置２３０のシャフト電極２３８がそうであるように、中心決め部材と長軸線方向に整列させた状態か、または、中心決め部材の片側または両側に設置した状態か、いずれかの態様で、１個以上の電極を中心決め部材の中央シャフト上に設置することができる。カテーテル２３２のようなバルーンカテーテルを利用した場合、膨張状態のバルーンはインピーダンスが増大した絶縁体として作用し、パルス出力電界を所望の電気の流路に沿った方向に指向性を持たせることができる。自明のことであるが、これに代わる各種絶縁部材を利用してもよい。

【００６９】

図６で分かるように、螺旋状電極２３６が腎動脈ＲＡの壁に物理的に接触すると、電界発生装置１００がパルス出力電界を発生し、螺旋状電極２３６とシャフト電極２３８の間にバイポーラ様式で電流を通すようになる。パルス出力電界は線Ｌｉに沿って電極と電極の間で移動するが、この線Ｌｉは動脈の長尺寸法部に沿って延在するのが普通である。パルス出力電界が螺旋状電極とシャフト電極の間で血管壁の中を移動するように、バルーン２３４は局所的に絶縁状態となり、かつ／または、局所的に患者の血管内のインピーダンスを増大させる。これによりエネルギーに指向性が与えられ、例えば、不可逆電気穿孔により、患者の腎臓神経の神経除去を向上させ、かつ／または、それ以外の神経調節を向上させる結果となる。

【００７０】

図７は、本発明のまた別な実施形態による、図４から図６に例示されている装置に類似している装置２４０を例示している。装置２４０のバルーンカテーテル２４２には拡張可能バルーン２４４とこのバルーンより近位に配置されたシャフト電極２４６とが設けられている。装置２４０の拡張可能な螺旋状電極２４８はカテーテル２４２のガイドワイヤ管腔２４３の中を搬送されるような形状になっている。図７に例示されている螺旋状電極２４８は自己拡張型である。

【００７１】

図７で分かるように、カテーテル２４２を標的血管（例えば、腎動脈ＲＡ）に設置した後で、バルーン２４４は、血管の壁に接触して血管内の所望部位にシャフト電極２４６を保持し、血管の内部を絶縁する、または、血管内部のインピーダンスを増大させるまで膨張させられる。バルーン２４４は一般に、血管内でシャフト電極２４６を中心に置くように、またそうでなければ、所望の距離だけ血管壁からシャフト電極を離隔させるように構成される。バルーン２４４を膨張させた後で、螺旋状電極２４８は、カテーテルシャフトを越えて張出すまで、管腔２４３の中を押し通されてから、電極２４８は拡張し、またそ

うでなければ、血管壁に物理的に接触するような螺旋状の形状へ移行させられる。バイポーラ式のパルス出力電界が螺旋状電極２４８とシャフト電極２４６の間で線Ｌｉに沿って加えられる。例えば、螺旋状電極２４８が活性電極を備えているとともにシャフト電極２４６は帰還電極をそなえているようにしてもよいし、その逆であってもよい。

【００７２】

ここで図８を参照しながら、複数の電極を有しており、拡張状態になると血管壁と接触することができる拡張可能バスケットを備えている装置を説明する。装置２５０は、複数周縁支柱または周縁部材から形成されている拡張可能な遠位バスケット２５４を有しているカテーテル２５２を備えている。複数の電極２５６はバスケット２５４の部材に沿って形成されている。バスケットの各部材は、腎動脈ＲＡの壁またはそれ以外の所望の血管壁に接触するような形状のバイポーラ電極対を備えているのが例示されている。

【００７３】

バスケット２５４は、例えば、ニチノール、バネスチール、エルギロイワイヤ、または、リボンなどのような、バスケット部材２５３を形成する複数の形状記憶ワイヤまたは形状記憶リボンから作成することができる。バスケット部材がリボンを含んでいる場合、血管壁に接触する表面積が増大するように、リボンを移動させることができる。バスケット部材２５３は、近位接続部材２５５ａと遠位接続部材２５５ｂのそれぞれの位置でカテーテル２５２に連結される。このような形状では、バスケットは鞘部材１５０の内側を搬送されるように折畳まれた状態にすることができ、また、鞘部材から取り出す際には、自己拡張して動脈の壁に接触することができる。任意で、近位接続部材２５５ａおよび／または遠位接続部材２５５ｂは、特定距離または不特定距離にわたってカテーテル２５２のシャフトに沿って並進させられるように構成されて、バスケットの拡張と収縮を容易にするように図ってもよい。

【００７４】

これに代わる例として、バスケット２５４は、スロットが設けられ、かつ／または、レーザー切断されたハイポチューブから形成されていてもよい。このような構成では、カテーテル２５２は、例えば、互いに相関的に移動可能である内側シャフトおよび外側シャフトを備えていてもよい。バスケット２５４の遠位接続部材２５５ｂは内側シャフトに連結することができ、バスケットの近位接続部材２５５ａは外側シャフトに連結することができる。カテーテル２５２の内側シャフトと外側シャフトを接近させることにより、バスケットの近位接続部材２５５ａと遠位接続部材２５５ｂを接近させてバスケットを拡張させて、バスケット２５４は折畳まれた搬送形状から図８の配備形状まで拡張させられる。同様に、カテーテルの内側シャフトと外側シャフトを離隔させることにより、バスケットを収縮させることができる。

【００７５】

図９で分かるように、個々の電極はバスケット支柱またはバスケット部材２５３に沿って配置される。一実施形態では、支柱は誘電素材で皮膜された導電材から形成されており、電極２５６は誘電体皮膜の領域を除去することにより形成される。任意で、絶縁材が部材の放射方向外側面に沿ってのみ除去されて、電極２５６がそれぞれの放射方向内面では絶縁性を保ったままになるようにしてもよいが、これにより、電流の流れを外向きにして血管壁中へ通すことが期待される。

【００７６】

図９の製造技術に加えて、或いは、これに代わる例として、電極はバスケット２５４の支柱または部材の内面または外面に取り付けられてもよいし、或いは、それら支柱または部材の中に埋設されてもよい。支柱または部材の各々に沿って設置された電極には個別の複数電極が設けられていてもよいし、１個の共通する区分けされた電極が設けられていてもよいし、或いは、１個の共通する切れ目無く連続する電極が設けられていてもよい。個別の複数電極または電極群はバイポーラ信号を供与する構成にされてもよいし、或いは、全部の電極または一部電極群を患者の体外の接地と連携して一緒に作動させることでモノポーラ式使用に付してもよい。

Aerin Exhibit 1011, Page 170 of 2183
Aerin Medical Inc. v. Neurent Medical Ltd.
IPR2025-01126

【００７７】
図８の実施形態に例示されているような血管壁に電極２５６を接触させる利点の１つとして、そうすることで拡張可能バルーンのような絶縁部材の必要を少なくして、腎臓神経除去またはそれ以外の神経調節を達成することが挙げられる。しかし、このような絶縁部材を設けて、例えば、バスケットの中で拡張させるようにしてもよいものと理解するべきである。更に、電極を血管壁に接触させることで電界の幾何学的形状を改善することができ、すなわち、電界を供与するのに、血管の長軸線との整列をより良好にすることができる。このような接触電極は、神経調節前、神経調節中、または、神経調節後の腎臓神経への刺激を促進し、治療前にカテーテル２５２の位置決めを改善することができ、或いは、治療の有効性を監視することができるようにもする。

【００７８】
装置２５０の変形例では、電極２５６はカテーテル２５２の中央シャフトに沿って配置され、バスケット２５４は電極を血管内の中心に簡単に位置決めすることで、血管壁を横断してエネルギーを搬送する処理をより正確に行えるようにすることができる。この構成は、腎動脈を包囲している腎臓神経などのような血管組織または血管外組織のより正確な標的設定に誠に好適である。バスケットまたはそれ以外の対動脈中心決め部材の寸法を正確に設定することで、中心に置かれた電極と動脈壁との間に既に分かっている距離を設けて、それを利用して、所望するとおりに電界を方向づけ、かつ／または、電界を集束させることができる。このような構成は高強度指向性超音波またはマイクロ波の応用例で利用することができるが、所望に応じてこれ以外のエネルギー理学療法との併用に適するようにされてもよい。

【００７９】
ここで図１０を参照すると、腎動脈の壁との周縁接点を形成する電極がより完全な腎臓神経除去または腎臓神経調節に備えていることが予期される。図１０には、リング電極を備えている本発明の変形例が例示されている。装置２６０のカテーテル２６２には、血管の壁に接触するような構成の拡張可能リング電極２６４ａ、２６４ｂが設けられている。これら電極は支柱２６６を介してカテーテル２６２のシャフトの取付けることができ、また、カテーテル２６２は鞘部材１５０の中を腎動脈ＲＡまで低プロファイル形状で搬送されるよう構成される。支柱２６６は自己拡張型でもよいし、或いは、作動によりまたは機械的に拡張されてもよい。カテーテル２６２は、ガイドワイヤの上を伝って前進するように、ガイドワイヤ管腔２６３を備えている。カテーテル２６２はまた、任意の膨張可能なバルーン２６８を備えており、このバルーンは、インピーダンスを増大させた絶縁素子として作用して、動脈壁を横断して電極２６４と電極２６４の間を移動する電流に優先的に指向性を与えることができる。

【００８０】
図１１Ａから図１１Ｃは、リング電極２６４に対する多様な巻線電極を例示している。図示のように、リング電極は、例えば、コイル状に巻かれてもよいし（図１１左）、ジグザグ上でもよいし（図１１真中）、または、蛇行状でもよい（図１１右）。巻線の周期性は所望に応じて指定されてもよい。更に、巻線の種類、すなわち周期性などは、電極の周縁に沿って変動していてもよい。

【００８１】
図１２を参照すると、装置２６０の変形例が例示されており、該装置のリング電極２６４′は図１１Ｃに例示されている蛇行状巻線の実施形態では正弦波状巻線である。支柱２６６は正弦波形の各頂点に取付けられるものと例示されている。電極２６４′の巻線は電極２６４が提供する接触面積よりも血管壁沿いに広い接触面積を設けていながら、尚且つ、搬送および回収を目的として鞘部材１５０の内部に装置２６０を容易に納めることができるようにしている。

【００８２】
図１３は、装置２６０のまた別な変形例が近位リング電極２６４ａを備えているのを例示しており、また更に、装置の遠位電極２７０がカテーテル２６２のガイドワイヤ管腔２

６３の中を搬送されているのを更に例示している。遠位電極２７０は非拡張型であり、カテーテル２６２により血管内で中央に位置決めされる。遠位電極２７０は、パルス出力電界発生装置に接続されて電極として使用される標準ガイドワイヤであってもよい。しかしながら、これに代わる例として、電極２７０は拡張して血管壁と接触するような構成にされてもよく、例えば、リング電極または螺旋状電極を備えているようにしてもよいものと理解するべきである。

【００８３】

カテーテル２６２の管腔の中を通して遠位電極を搬送することで、装置２６０の搬送プロファイルを低減し、かつ／または、装置の可撓性を向上させることができる。更に、ガイドワイヤ管腔の中を通して遠位電極を搬送することは、管腔２６３の内部に配置されたガイドワイヤを医療従事者がパルス出力電界を加える前に確実に取り出すようにする安全機能として作用する。これはまた、治療期間を患者ごとに個別設定することができるようにするばかりか、後段で説明されるように、傍系の血管分岐の中で治療を行うことができるようにもなる。

【００８４】

リング電極２６４、２６４′は、任意で、それぞれの放射方向内面に沿って電気絶縁されると一方で、血管壁に接触するそれぞれの放射方向外面は電気に晒されるようにしてもよい。これにより、血栓形成の危険を低減するとともに、電界の指向性を血管の長軸線沿いに設定するのを改善または向上させることができる。これにより、神経線維を破裂させるのに必要な電界圧力の低減を促進することもできる。リング電極を少なくとも部分的に絶縁するために利用される素材と具体例としては、ポリテトラフルオロエチレン（PTFE）、延伸ポリテトラフルオロエチレン（ePTFE）、フッ化エチレンプロピレン（FEP）、クロロプレン、シリコーン、ウレタン、ペバックス（Pebax）などがある。図１４を参照すると、装置２６０のまた別な変形例が例示されているが、ここでは、リング電極がポイント電極２７２に置き換えられており、支柱２６６の各端部に配置されている。ポイント電極は鞘部材１５０の中を搬送するために支柱と一緒に折畳むことができ、また、支柱と一緒に自己拡張して血管壁に接触することができる。図１４では、カテーテル２６２には、バルーン２６８の両側に４個のポイント電極２７２が設けられているのが例示されている。しかし、所望数ならば何個の支柱およびポイント電極をカテーテル２６２の周縁付近に設けてもよいものと理解するべきである。

【００８５】

図１４では、装置２６０には、バルーン２６８の両側に４本の支柱２６６と４個のポイント電極２７２が設けられているのが例示されている。全ての遠位に配置された電極２７２ｂを活性電極として利用するとともに、全ての近位電極２７２ａを帰還電極として利用することにより、または、その逆の態様で利用することにより、電界が沿線を伝搬する線Ｌｉは血管の長軸線と整列させることができる。線Ｌｉが血管の回転軸線沿いに重複する程度は、パルス出力電界のパラメータを特定することによってばかりか、カテーテルの周縁を中心としたポイント電極２７２の角度設定と密度を特定することによっても特定することができる。

【００８６】

ここで図１５を参照しながら、経管パルス出力電界カテーテルのまた別な変形例を説明する。装置２８０のカテーテル２８２には任意の膨張可能なバルーンまたは中心決め部材２８４と、カテーテルのシャフトに沿ってバルーンの両側に配置されたシャフト電極２８６ａ、２８６ｂとが設けられているほかにも、カテーテルのシャフトに沿って配置され、バルーンと一列に並ぶように例示されている任意の放射線不透過性マーカー２８８が設けられている。バルーン２８４は、先にも説明したように、電極２８６のための中心決め部材として、また、電界に指向性を持たせる電気絶縁部材として、これら両方の働きをする。

【００８７】

装置２８０は所望の動脈または動脈外組織の正確な標的設定を達成するのに特に好適で

あるが、それは、標的動脈に対してバルーン２８４を適切に寸法設定することで中心に置かれた電極２８６と動脈壁の間に既に分かっている距離を置けるからであるが、この距離は、パルス出力電界のパラメータを指定する場合に利用することができる。これに代わる例として、電極２８６はカテーテルの中心シャフトではなくバルーン２８４に取付けられるが、その場合、電極が動脈の壁に接触するように取付けられる。このような変形例では、電極はバルーンの壁の内面に付着されてもよいし、外面に付着されてもよいし、或いは、バルーンの壁の中に埋設されてもよい。

【００８８】

カテーテル２８２の長尺部に沿って配置されている電極２８６は個別の複数電極でもよいし、１個の共通する区分けされた電極でもよいし、または、１個の共通する切れ目無く連続する電極であってもよい。更に、電極２８６はバイポーラ信号を供与するような構成になっていてもよいし、或いは、電極２８６は別個の患者の体外の接地と連携して一緒にまたは個別に使用されることでモノポーラ式使用に付すこともできる。

【００８９】

ここで図１６を参照しながら、装置２８０を使って腎臓神経除去を達成する方法を説明する。図１６Ａで分かるように、カテーテル２８２は腎動脈ＲＡの内部の所望部位に配置することができ、バルーンすなわち中心決め部材２８４は拡張させられることで電極２８６を中心位置に設置するとともに、任意で電気絶縁を施すことができ、更に、パルス出力電界は、例えば、近位電極２８６ａと遠位電極２８６ｂの間でバイポーラ様式で加えることができる。パルス出力電界は治療区域１T_1に沿って腎臓神経除去および／または腎臓神経調節を達成することが期待される。腎動脈の別な部位における神経活動を調節するのが望ましい場合は、バルーン２８４は少なくとも一部が拡張されればよく、また、カテーテルは、図１６Ｂにあるように、第２の所望の治療区域T_2に設置されればよい。医療従事者は、任意で、放射線不透過性マーカー２８８のＸ線透視画像化法を利用して、所望の部位でカテーテル２８２の配向を決めて治療できるようにすることができる。例えば、医療従事者はマーカーを使って、図示のように、治療区域T_1と治療区域T_2の間の重複領域Ｏを確保することができる。

【００９０】

図１７を参照しながら、複数のダイナミック制御可能な電極２８６がバルーン２８４の近位側に配置されている装置２８０の変形例を説明する。一変形例では、近位電極２８６ａのうちの１個が遠位電極２８６ｂとバイポーラ様式でエネルギー投入され、活性電極と帰還電極の間の長軸線方向の距離をダイナミックに制御することができる。これにより、治療区域の寸法と形状を変える。また別な変形例では、一部の近位電極群２８６ａのいずれも一緒に、近位電極２８６ａと遠位電極２８６ｂの間に確立されたバイポーラ電界の活性電極または帰還電極としてエネルギー投入することができる。

【００９１】

図１７に例示されている装置２８０は３個の近位電極２８６ａを備えているけれども、この個数に代えて、何個の近位電極を装置２８０が有しているようにしてもよい。更に、装置２８０は多数の近位電極に加えて、または、これら近位電極の代わりに、複数の遠位電極２８６ｂを有していてもよい。更に、１対の電極のうちの一方の電極をカテーテル２８２に接続し、他方の電極をカテーテルの管腔の中を通して搬送し、例えば、ガイドワイヤ管腔の中を通して搬送するようにしてもよい。カテーテルおよび経管搬送される電極は互いに相関的に位置が整復されて、電極と電極の間の離隔距離を変えることができる。このような変形例はまた、多様な腎臓血管解剖学的構造の治療を容易にする。

【００９２】

これまで説明してきた装置２８０の変形例では、遠位電極２８６ｂはバルーン２８４より遠位でカテーテル２８２のシャフトに連結される。遠位電極はカテーテル２８２の内側の管腔を利用し、例えば、接地として作用するリードワイヤの経路設定を行うことができる。更に、バルーン２８４より遠位のカテーテル２８２の一部は遠位電極を収容するのに十分な長さがある。

【００９３】
複数カテーテルはどれも共通して、金属製で、かつ／または、導電性のガイドワイヤの上を伝って搬送される。カテーテルに関与する多数の介入治療では、治療中はガイドワイヤは除去されない。装置２８０がパルス出力電界を加えるのに適した構成になっているので、ガイドワイヤが取り外されると、エネルギー伝搬中にガイドワイヤに接触した人に電気ショックを与える危険が生じる恐れがある。このような危険は、重合体皮膜されたガイドワイヤを使うことにより低減することができる。
【００９４】
図１８を参照しながら、装置２８０のまた別な変形例を説明するが、この場合、図１６および図１７の遠位電極２８６ｂは、図１３に関して先に説明したようなカテーテルの管腔を通して移動させられるような構成の遠位電極２７０と置き換えられている。明らかに、これに代わる例として、近位電極２８６ａを経管搬送される電極と置き換えて、電極２８６ｂと電極２７０がバイポーラ電極対を形成するようにしてもよい。電極２７０はカテーテル２８２の内部の別な管腔を利用する訳ではなく、そのことでプロファイルを低減することができる。更に、バルーンより遠位のカテーテルの長尺部は遠位電極の長尺部に相当する長さを提供する必要はなく、これにより可撓性を向上させることができる。更に、ガイドワイヤが治療前に電極２７０と交換されなければないが、これが不慮の電気ショックの危険を低減する。一変形例では、任意で、電極２７０をガイドワイヤとして使うことができるが、パルス出力電界を加える前にこのガイドワイヤ上を伝わせてカテーテル２８２を前進させることにより、ガイドワイヤを電極と交換する必要を無くする。これに代わる例として、標準的な金属製ガイドワイヤを電極２７０として使うことができるようにするのに、標準ガイドワイヤをパルス出力電界発生装置に接続するだけでよい。遠位電極２７０は、カテーテル２８２の遠位端を越えて所望の距離だけ延長させることができる。これにより、治療区域の長さをダイナミックに変えることができるようになる。更に、これにより、直径を減じた遠位血管内における治療を容易にすることができる。
【００９５】
図１９を参照すると、主要血管から延びている１本以上の傍系血管分岐の内部で治療を実施すること、具体的には、腎臓門の付近の腎動脈の分岐の内部で治療を実施するのが望ましいことがある。更に、少数の患者にしか見られる腎臓血管の異常分岐または普通ではない分岐の内部で治療を実施するのが望ましい場合がある。図１９Ａで分かるように、遠位電極２７０は腎動脈ＲＡの上述のような分岐内に設置することができるが、カテーテル２８２は動脈の主要分岐の中に設置される。図１９Ｂで分かるように、遠位電極２７０は多数設けられ、腎動脈の多様な普通の分岐または普通ではない分岐に設置されるが、カテーテルは主要動脈分岐内に留まる。
【００９６】
図２０を参照しながら、経管パルス出力電界カテーテルのまた別な変形例を説明する。装置２９０のカテーテル２９２には、中心決め部材２９６と一列に配置された複数のシャフト電極２９４が設けられている。中心決め部材２９６が、図８の既に説明済みの拡張可能なバスケット２５４などのような拡張可能バスケットを備えているのが例示されている。しかし、その代替例として中心決め阻止はバルーンまたはそれ以外のどんな中心決め部材を備えていてもよいものと理解するべきである。電極２９４はバイポーラ様式またはモノポーラ様式のいずれで利用されてもよい。
【００９７】
ここで図２１を参照しながら、本発明のまた別な変形例を説明するが、この装置の電極は血管壁に相関的に１個以上の電極の位置をダイナミックに放射方向に整復するような構成になっていることにより、電極により加えられるパルス出力電界に容易に指向性を持たせることができるようにしている。装置３００のカテーテル３０２には、拡張可能な部材と一列に配置された電極が設けられている。入れ子式の拡張可能な部材は内側の拡張可能部材３０６と外側の拡張可能な中心決め部材３０８とを有している。電極３０４は内側拡張可能部材に沿って配置されているが、外側の拡張可能な中心決め部材は血管内で中心に

配置されてカテーテル３０２を安定させるように構成されている。内側拡張可能部材３０６は医療従事者が所望するとおりに様々に変動して異なる程度で拡張させることで、電極３０４の放射方向位置をダイナミックに変えることができる。このダイナミックな放射方向の位置整復を利用して、標的組織にエネルギーを伝搬するように、電極３０４によって伝搬されるエネルギーに指向性を持たせることができる。

【００９８】

入れ子式部材３０６、３０８はバルーンの中に別なバルーンを入れた配置、バスケットの中に別なバスケットを入れた配置、バルーンとバスケットとを如何様にか組合せた配置、または、これ以外の拡張可能な入れ子配置を取る。図２１では、内側拡張可能部材３０６は拡張可能バスケットを備えているのが例示されており、外側の拡張可能な中心決め部材３０８は拡張可能バルーンを備えているのが例示されている。電極３０２は内側バルーン３０６の表面に沿って設置されている。

【００９９】

本件に記載されている発明の変形例のいずれも、任意で、エネルギー供与前、エネルギー供与中、または、エネルギー供与後に治療領域に薬剤を注入することができるような構成にすることで、例えば、エネルギーの神経破壊効果または神経調節効果を向上または変動させ、標的ではない細胞を保護または一時的に変位し、かつ／または、視認化を容易にすることができる。注入された薬剤を追加して投与することも理解できる。所望されるのであれば、注入薬剤が存在している細胞に可逆電気穿孔を施すことにより、注入薬剤の細胞による摂取を向上させることができる。バルーンの中心決め部材が利用される場合には、注入は特に望ましい。注入剤としては、例えば、生理食塩水、ヘパリン投与整理食塩水、ポロクサマー188（Poloxamer-188）のような防護薬、増殖防止剤などがある。これに加えて、または、これに代わる例として、本発明の変形例は吸引するような構成になっていてもよい。例えば、注入ポートまたは注入口が中心決め装置に隣接してカテーテルシャフトに設けられていてもよいし、中心決め装置は有孔であってもよいし（例えば、「ウイーピング」バルーンなど）、或いは、バスケットの支柱が中空のハイポチューブから作成されたうえで、スロットまたは穿孔が設けられて注入または吸引が行えるようになっていてもよい。

【０１００】

図２２を参照しながら、注入／吸引用のパルス出力電界カテーテルを備えている本発明の変形例を説明する。装置３１０のカテーテル３１２には近位膨張可能バルーン３１４ａと遠位膨張可能バルーン３１４ｂがそれぞれ設けられている。両バルーンの間でカテーテル３１２のシャフトに沿って近位シャフト電極３１６が配置されており、両バルーンよりも遠位でカテーテルシャフトに沿って遠位電極３１６ｂが配置されている。１個以上の注入用または吸引用の孔３１８がカテーテル３１２のシャフトに沿って両バルーンの間で近位電極３１６ａに近接して配置されている。

【０１０１】

装置３１０は多様な方法で利用することができる。第１の使用法では、カテーテル３１２は、腎動脈ＲＡなどのような標的血管内の所望部位に配置される。バルーン３１４の一方または両方が膨張させられてから、防護剤またはそれ以外の注入剤が両バルーンの間で電極３１６ａに近接した位置の孔（単数または複数）３１８から注入される。可逆電気穿孔を施すのに好適なパルス出力電界が電極３１６を横断して加えられて、血管壁の内側の標的ではない細胞による注入剤の摂取を促進する。防護剤の搬送を向上させる手段として、まず第１に遠位バルーン３１４ｂを膨張させてから、血液を退避させる防護剤を注入し、その後に近位バルーン３１４ａを膨張させる。

【０１０２】

任意で、残留注入剤を吸引させて、神経細胞に対する不可逆電気穿孔が開始された際にその後のパルス出力電界付与中には注入剤が利用できないようにしてもよい。吸引中に一方のバルーンのみを少なくとも部分的に収縮させることにより、吸引を達成することができる。これに代わる例として、吸引は両方のバルーンを膨張させた状態で達成されてもよ

Aerin Exhibit 1011, Page 175 of 2183
Aerin Medical Inc. v. Neurent Medical Ltd.
IPR2025-01126

く、例えば、吸引と連動させて生理食塩水を注入して膨張した両バルーンの間の血管部分を洗い流すことによって実施される。このような血液洗浄により、パルス出力電界付与中に近位電極３１６ａに沿って血餅が形成される危険を低減することができる。更に、エネルギー供与中に洗浄を行うことで、電極を冷却し、かつ／または、動脈壁の細胞を低温化することができる。このような動脈壁細胞の低温化により不可逆電気穿孔による損傷から細胞を保護し、防護剤の注入の必要を低減することができるようになる。

【０１０３】

注入と任意吸引の後で、標的神経細胞に不可逆電気穿孔を開始するのに好適なパルス出力電界は、電極３１６を横断して加えられることにより神経除去を行い、或いは、神経活動を調節することができる。代替の方法では、防護剤の注入は、不可逆電気穿孔の開始中または開始後に行われて、標的ではない細胞を保護するように図ってもよい。防護剤は、例えば、不可逆電気穿孔により、標的ではない細胞に形成されている穿孔を塞ぐ、すなわち、空所を埋めることができる。

【０１０４】

これに代わる方法では、冷たくした（すなわち、体温より低温の）ヘパリン投与生理食塩水溶液を同時に注入して、膨張状態の両バルーンの間から吸引させ、両バルーンの間の領域を洗浄し、血管壁細胞の電気穿孔に対する感度を低下させることができる。これにより、不可逆電気穿孔を開始するのに好適なパルス出力電界を施している最中に更に細胞を保護することが期待される。このような洗浄は、任意で、パルス出力電界供与の最初から最後まで断続的に行ってもよい。任意で、熱電対またはそれ以外の温度センサーを両バルーンの間に設置して、冷えた注入剤の注入速度を調節しながら所望温度を維持することができるように図ってもよい。冷えた注入剤は、例えば腎臓神経などのような標的組織は低温化させないのが好ましい。ポロクサマー188などのような防護剤が任意で、更なる安全策として、治療後に注入されてもよい。

【０１０５】

これに代わる例として、ウイーピングバルーンカテーテルにより注入を達成してもよい。更にまた、少なくとも1個の電極が設けられた低温バルーンカテーテルを利用することができる。低温バルーンを血管部分の内部で膨張させて、血管部分の温度を局所的に低下させ、例えば、電界を加えている最中にその部分を保護し、かつ／または、血管壁の熱によるアポプトーシスを誘発させるように図ることができる。電界の具体例として、パルス出力電界、または、熱高周波電界などのようなパルス出力型ではない熱電界が含まれる。

【０１０６】

ここで図２３を参照しながら、血管を少なくとも部分的に横断して電極（単数または複数）を通すような構成のパルス出力カテーテルの変形例を説明する。例えば、電極（単数または複数）を腎静脈の内側に設置してから、腎静脈の壁を横断させて電極を渡すことで、ジェロータ筋膜すなわち腎筋膜の腎動脈付近に、または、少なくとも部分的に腎動脈を取り巻いて配置されるようにすることができる。このような態様で、パルス出力電界を加える前に、標的腎臓神経線維に極めて近接した位置に電極（単数または複数）を設置することができる。

【０１０７】

図２３Ａで分かるように、装置３２０のカテーテル３２２にはニードルポート３２４と、図中では膨張バルーンとして例示されている中心決め部材３２６とが設けられている。カテーテル３２２はまた、任意で、放射線不透過性マーカー３２８が設けられていてもよい。ニードルポート３２４は、そこを貫いて針３３０を通すような構造にはっているが、針３３０は電極３４０を通すような構造になっている。

【０１０８】

腎静脈ＲＶが腎動脈ＲＡに平行に延びている。経管超音波のような画像化物理療法を利用して、腎静脈に対する腎動脈の位置を識別することができる。例えば、任意で、経管超音波部材はカテーテル３２２の中に統合されていてもよい。カテーテル３２２は、周知の経皮技術を利用して、腎静脈ＲＶの内部に設置され、中心決め部材３２６を膨張させて、

静脈内のカテーテルを安定させることができる。続いて、針３３０をカテーテル３２２に通してニードルポート３２４から外へ出すが、その際、針が腎静脈の壁を刺通してジェロータ筋膜すなわち腎筋膜Ｆの中に入るような態様で行われる。放射線不透過性マーカー３２８はＸ線透視で視認化され、針３３０の配備前にニードルポート３２４を適切に配向することができる。

【０１０９】

電極３４０は、図２３Ａおよび図２３Ｂにあるように、針３３０の中を通して配備され、腎動脈ＲＡを少なくとも部分的にとり囲むようになっている。電極を継続して前進させることで、図２３Ｃに例示されているように、更に動脈をとり巻くことができる。電極が配備された状態で、刺激波形および／またはパルス出力電界電気穿孔波形が付与されて、腎臓神経の神経除去または調節を行う。針３３０は、任意で、一部または全部が治療前に後退させられているため、電極３４０は腎動脈の部分をより広範囲にとり巻くことになる。

【０１１０】

任意で、注入剤を針３３０から筋膜Ｆの中に注入し、電極設置用の空間を設けることにより、電極３４０の設置を容易にすることができる。注入剤には、例えば、流体、加熱液、冷やした液、空気、二酸化炭素、生理食塩水、造影剤、ゲル、導電液、それ以外の空間を占有できる材料であれば、気体でも、固体でも、液体でもどんな材料でも含まれる。ヘパリン投与生理食塩水が注入されてもよい。生理食塩水または高浸透性生理食塩水は両電極３４０の間の導電率を向上させることができる。これに加えて、または、これに代わる例として、薬物および／または薬物搬送部材を針の中を通して筋膜内に注入または設置するようにしてもよい。

【０１１１】

治療後は、電極３４０が針３３０の中に後退させられて、針３３０はニードルポート３２４を介してカテーテル３２２の中に後退させることができる。針３３０は、出血の発生を最小限に抑えるとともに、止血をかなり迅速に達成するのに十分な程度に細いのが好ましい。任意で、バルーン型の中心決め部材３２６は針３３０を回収した後も暫くの間は膨張したままで、血流を遮断し、血液凝固過程を促進するよう図ってもよい。代替例として、バルーンカテーテルは、装置３２０を取出した後で、腎静脈の中に進入させられて膨張させられてもよい。

【０１１２】

図２４を参照しながら、治療効果を測定または監視する検出装置またはそれ以外の部材を備えている本発明の変形例を説明してゆく。本発明の変形例は、神経除去またはパルス出力電界の調節に加えて、刺激電界を加えるように構成されていてもよい。このような刺激電界を利用して、治療装置を適切に設置し、かつ／または、神経活動を調節する際に治療の効果を監視することができる。これは、腎臓神経を刺激することで影響があると分かっている生理学的パラメータの反応を監視することにより達成される。このようなパラメータの具体例には、レニン値、ナトリウム値、腎臓血流、血圧などが含まれている。刺激を利用して、治療効果を監視するために神経除去を吟味することもできる。すなわち、腎臓神経の神経除去をすると、刺激に対する事前に分かっている生理学的反応がこのような刺激への反応としてもはや生じなくなる。

【０１１３】

遠心性神経の刺激波形には、例えば、約１Hzから10 Hzの周波数が含まれているが、求心性神経の刺激波形には、例えば、約50 Hzまでの周波数が含まれている。波形振幅は、例えば、約50 Vまでの範囲におよび、パルス持続時間は、例えば、約20ミリ秒までの範囲におよぶ。本発明の幾つかの実施形態でそうであるように、神経刺激波形が経管伝搬される場合は、周波数、振幅、パルス持続時間などのような電解パラメータを調節することで、標的神経に向けて搬送するのに、血管の壁を貫いて波形を伝えるのが容易となる。更に、刺激波形の具体的パラメータを説明したが、これらに代わるパラメータを所望に応じて利用してもよいものと理解するべきである。

【０１１４】
本発明の前述の変形例のいずれかでパルス出力電界を加えるために使用される電極を利用して、腎臓血管に刺激波形を伝搬するようにしてもよい。これに代わるものとして、変形例は刺激を与える攻勢の独立した電極を備えているようにしてもよい。また別な代替例として、別個の刺激装置を設けるようにしてもよい。
【０１１５】
刺激を利用して腎臓神経を識別する方法の１つは、腎臓血液流に影響を与えるように神経を刺激すること、すなわち、腎臓神経が神経除去されていないのであれば、または、調節されていないのであれば腎臓血液流に影響を与えることになるように神経を刺激することである。刺激は腎臓血液流を低減するように作用し、このような反応は神経除去に伴い減衰され、または、皆無となる。従って、神経調節する前に刺激を与えると血流が低減すると予期されるが、神経刺激前と同じ刺激パラメータで同じ刺激部位を利用した場合には、神経調節した後で刺激を与えても同程度に血流が低減することは期待できない。このような現象を利用して、腎臓神経調節の程度を定量化することができる。本発明の変形例は、腎臓血流を監視する部材、または、腎臓刺激により影響を受けることが分かっている上記以外の生理学的パラメータのいずれかを監視する部材を含んでいるようにしてもよい。
【０１１６】
図２４Ａには、図１６の、腎臓血液流を監視する部材を設けた装置２８０の変形例が例示されている。ドップラー超音波センサー３５２を備えているガイドワイヤ３５０にカテーテル２８２の管腔の中を前進させて、腎動脈ＲＡの内部の血流を監視した。ドップラー超音波センサー３５２は、動脈の中を通る血流の速度を測定するよう構成されている。次に、次の公式に従って流量を算定することができる。

$$Q = VA \qquad (1)$$

この場合、Ｑは流量に等しく、Ｖは流速に等しく、Ａは断面積に等しい。腎臓血液流の基準は、刺激波形の伝搬前にセンサー３５２からの測定値により判定することができ、刺激は、好ましくはバルーン２８４が収縮された状態で、両電極２８６の間を伝達される。腎臓血液流の基準からの変動、すなわち、血液流の不足をセンサー３５２を使って監視することで、腎臓神経の神経刺激および／または神経除去の最適部位を識別することができる。
【０１１７】
図２４Ｂは図２４Ａの装置の変形例を例示しており、ここでは、ドップラー超音波センサー３５２がカテーテル２８２のシャフトに接続されている。センサー３５２はバルーン２８４より近位に配置されているように例示されているが、これに代わる例として、センサーはバルーンより遠位に配置されていてもよいものと理解するべきである。
【０１１８】
ドップラー超音波により腎臓血液流を経管監視することに加えて、または、これに代わるものとして、このような監視は、任意で、患者の体外から実施されてもよく、それにより、腎臓血液流は皮膚を通して視認化される（例えば、超音波変換装置を利用する）。また別な変形例では、１個以上の経管圧力変換装置を使用して、腎臓血液流を示す局所圧力変化を検知するようにしてもよい。また別な代替例として、血流速度を判定するにあたり、例えば、予め離隔距離が分かっている２点間を経管温度入力が推移する時間遅延を測定することによる温度希釈法で実施されてもよい。
【０１１９】
例えば、熱電対を各々の電極２８６に組み入れて、または、その近位に設けて、冷えた（すなわち、体温よりも低い）流体または生理食塩水を両熱電対よりも近位に注入する。温度減少が熱電対と熱電対の間で伝わる時間遅延を利用して、流れ特性を量化することができる。腎臓神経を刺激する前に興味のある流れ特性（単数または複数）の基準推定値を判定しておき、刺激を与えた後に判定された特性の第２の推定値と比較するとよい。
【０１２０】
任意で、市場で購入できる装置を利用して治療を監視するようにしてもよい。かかる装

Aerin Exhibit 1011, Page 178 of 2183
Aerin Medical Inc. v. Neurent Medical Ltd.
IPR2025-01126

置の具体例には、米国カリフォルニア州ランチョコルドヴァのヴォルカノ・セラピューティクス（Volcano Therapeutics Inc.）から入手できるスマートワイヤ（SmartWire：商標）装置、フロワイヤ（FloWire：商標）装置、および、ウエーヴワイヤ（WaveWire：商標）装置のほかに、スゥエーデン国ウプサラのＲＡＤＩメディカル・システムズ（RADI Medical Systems AB）から入手できるプレッシャワイヤ（PressureWire：商標）がある。これら以外に市場で購入できる装置は明らかである。上記に加えて、または、上記に代えて、電気穿孔の程度を監視するにあたり、電気インピーダンス断層撮影法（EIT）またはこれ以外の電気インピーダンス測定法で、例えば、電気インピーダンス指数などを利用して、直接監視してもよい。

【０１２１】

本発明の好ましい具体的な変形例を先に述べたが、本発明から逸脱せずにこれら変形例に多様な変更や修正を施すことができることは、当業者には明らかである。例えば、これら変形例は主としてパルス出力電界と連携した用途を説明してきたが、これ以外の電界を所望に応じて加えることができるものと理解するべきである。本発明の真の精神と範囲に入るこれら変形および修正は全て添付の特許請求の範囲が含んでいるものと解釈されるべきである。

【図１】

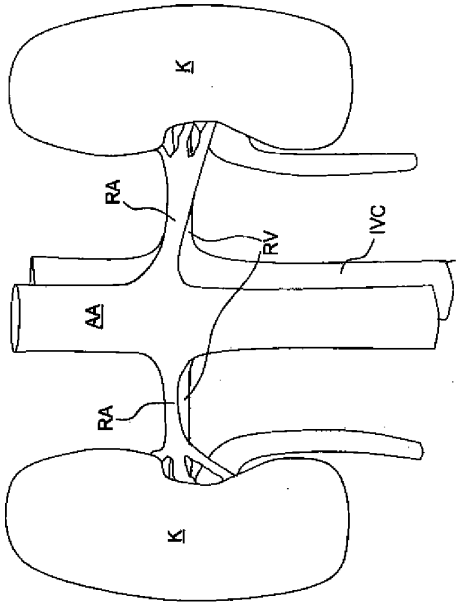

【図２】

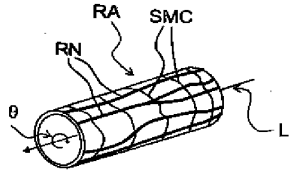

【図３Ａ】

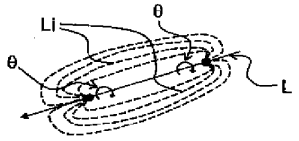

【図３Ｂ】

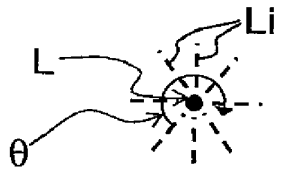

【図４】

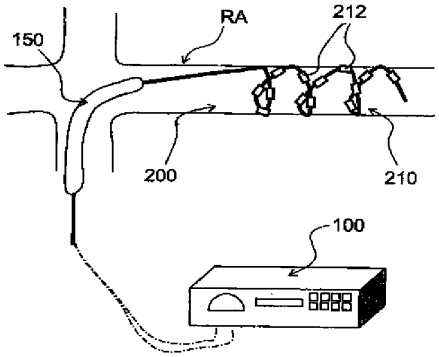
150
RA
212
200
210
100

【図５】

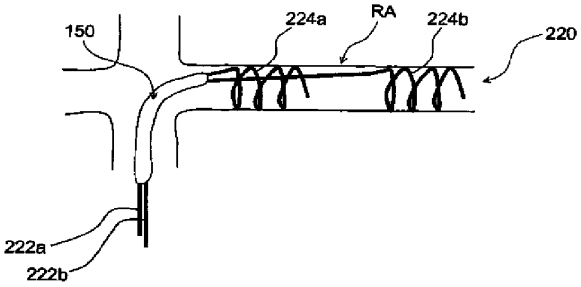
150
224a
RA
224b
220
222a
222b

【図６】

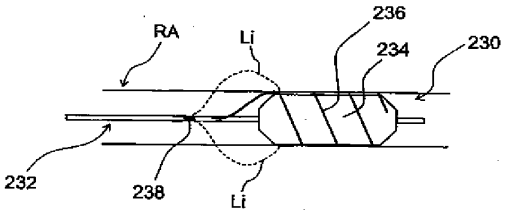
RA
Li
236
234
230
232
238
Li

【図７】

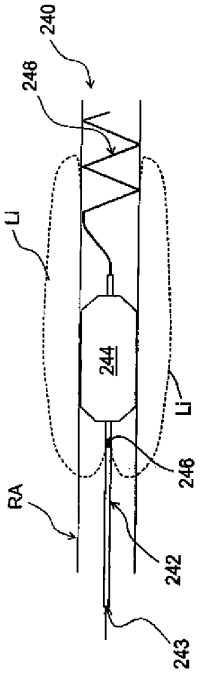
240
248
Li
244
Li
246
RA
242
243

【図８】

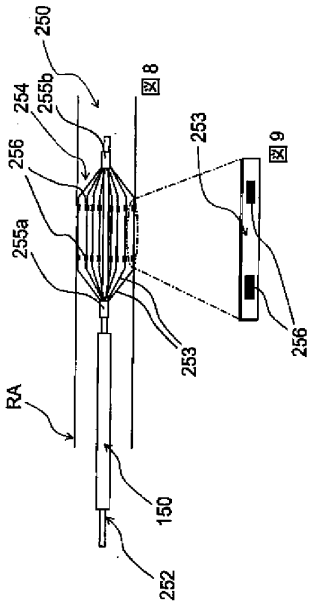
250
図8
254
255b
256
253
図9
255a
253
256
RA
150
252

【図９】

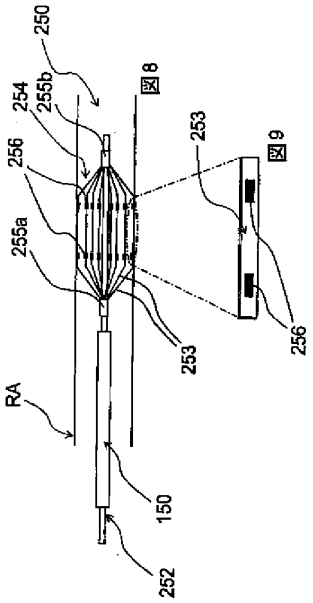

図８

図９

【図１０】

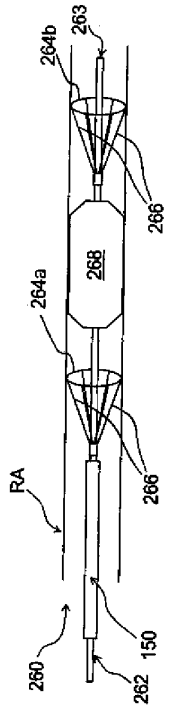

【図１１】

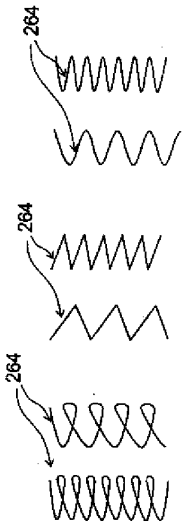

【図１２】

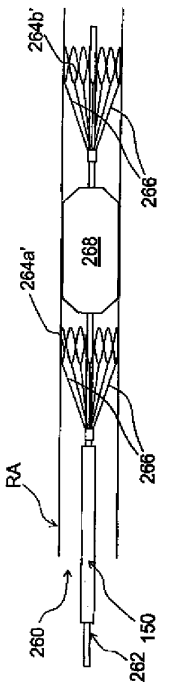

【図１３】

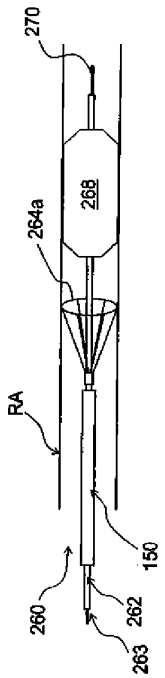

【図１４】

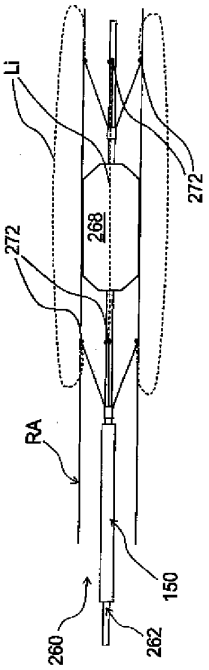

【図１５】

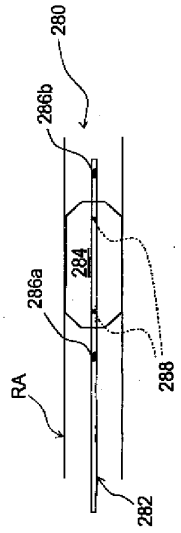

【図１６】

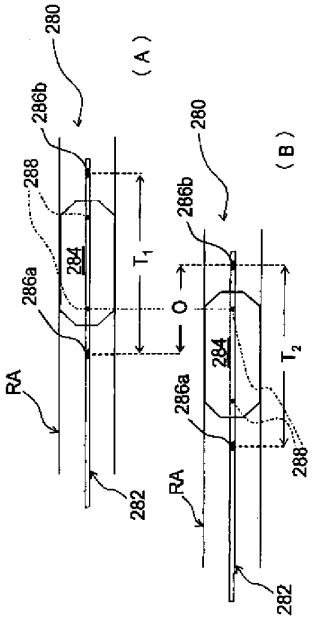

【図１７】

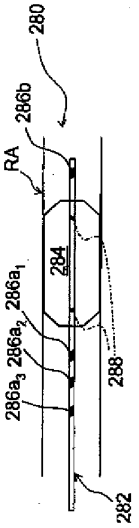

【図１８】

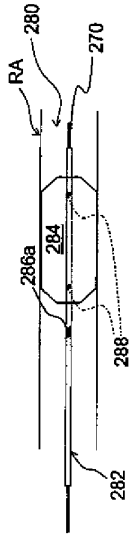

【図１９Ａ】

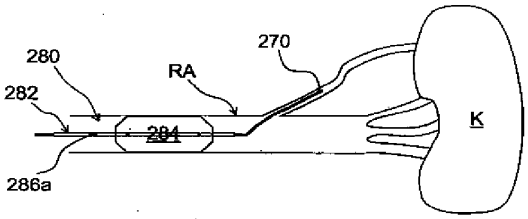

【図１９Ｂ】

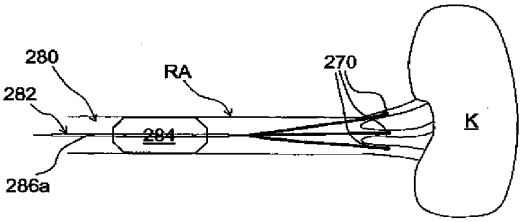

【図２０】

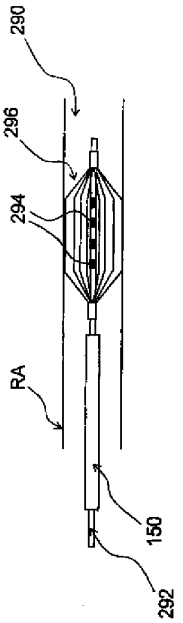

【図２１】

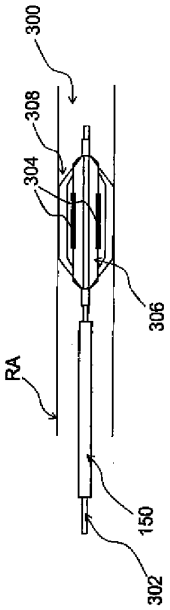

【図２２】

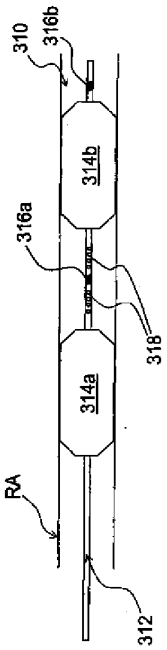

【図２３Ａ】

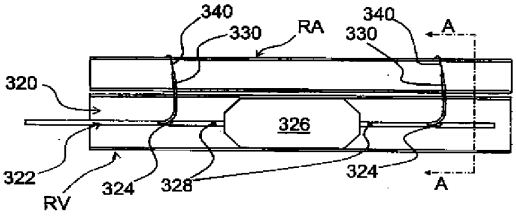

【図２３Ｂ】

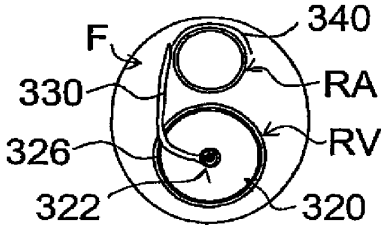

【図２３Ｃ】

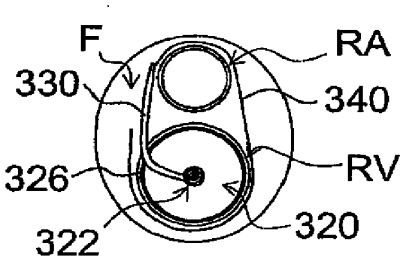

【図２４Ａ】

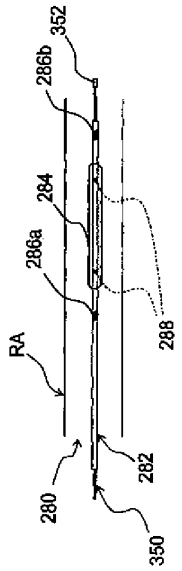
352
286b
284
286a
RA
288
280
282
350

【図２４Ｂ】

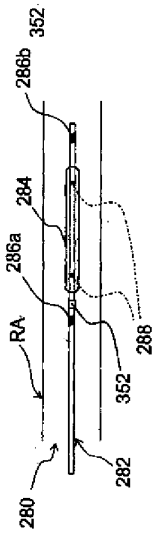
352
286b
284
286a
RA
288
352
280
282

フロントページの続き

(72)発明者 ディーム マーク
アメリカ合衆国 カリフォルニア州 マウンテン ヴィュー シエラ アベニュー ６８５
(72)発明者 ギフォード ハンソン ザ サード
アメリカ合衆国 カリフォルニア州 ウッドサイド ウッドサイド ロード ３１０８
(72)発明者 ディマレイズ デニス
アメリカ合衆国 カリフォルニア州 ロス ガトス シャノン ロード １５４０
(72)発明者 サットン ダグラス
アメリカ合衆国 カリフォルニア州 パシフィカ アドーブ ドライヴ １５９５
(72)発明者 タイ エリック
アメリカ合衆国 カリフォルニア州 サン ホセ ブラッシュグレン ウェイ ２３１８
(72)発明者 ゲルファンド マーク
アメリカ合衆国 ニューヨーク州 １００１３ ニューヨーク グランド ストリート １９６
(72)発明者 レヴィン ハワード アール
アメリカ合衆国 ニュージャージー州 ０７６６６ ティーネック ポマンダー ウォーク ６４０

Ｆターム(参考) 4C053 DD02 DD08
4C160 KK04 KK05 KK36 KK37 MM53

(12) INTERNATIONAL APPLICATION PUBLISHED UNDER THE PATENT COOPERATION TREATY (PCT)

(19) World Intellectual Property Organization
International Bureau

(43) International Publication Date
23 December 2009 (23.12.2009)

PCT

(10) International Publication Number
WO 2009/154456 A1

(51) International Patent Classification:
A61B 5/00 (2006.01) *A61N 1/05* (2006.01)
A61N 1/375 (2006.01)

(21) International Application Number:
PCT/NL2009/050356

(22) International Filing Date:
18 June 2009 (18.06.2009)

(25) Filing Language: English

(26) Publication Language: English

(30) Priority Data:
2001695 18 June 2008 (18.06.2008) NL
2001696 18 June 2008 (18.06.2008) NL

(71) Applicant *(for all designated States except US)*: **Kerphos B.V.** [NL/NL]; Lagedijk 60, NL-1544 BH Zaandijk (NL).

(72) Inventor; and
(75) Inventor/Applicant *(for US only)*: **de Vos, Gerrit Johannis** [NL/NL]; Oude Rijksweg 33, NL-4472 AD 's-Heerhendrikskinderen (NL).

(74) Agent: **Ketelaars, Maarten**; J.W. Frisolaan 13, NL-2517 JS The Hague (NL).

(81) Designated States *(unless otherwise indicated, for every kind of national protection available)*: AE, AG, AL, AM, AO, AT, AU, AZ, BA, BB, BG, BH, BR, BW, BY, BZ, CA, CH, CL, CN, CO, CR, CU, CZ, DE, DK, DM, DO, DZ, EC, EE, EG, ES, FI, GB, GD, GE, GH, GM, GT, HN, HR, HU, ID, IL, IN, IS, JP, KE, KG, KM, KN, KP, KR, KZ, LA, LC, LK, LR, LS, LT, LU, LY, MA, MD, ME, MG, MK, MN, MW, MX, MY, MZ, NA, NG, NI, NO, NZ, OM, PE, PG, PH, PL, PT, RO, RS, RU, SC, SD, SE, SG, SK, SL, SM, ST, SV, SY, TJ, TM, TN, TR, TT, TZ, UA, UG, US, UZ, VC, VN, ZA, ZM, ZW.

(84) Designated States *(unless otherwise indicated, for every kind of regional protection available)*: ARIPO (BW, GH, GM, KE, LS, MW, MZ, NA, SD, SL, SZ, TZ, UG, ZM, ZW), Eurasian (AM, AZ, BY, KG, KZ, MD, RU, TJ, TM), European (AT, BE, BG, CH, CY, CZ, DE, DK, EE, ES, FI, FR, GB, GR, HR, HU, IE, IS, IT, LT, LU, LV, MC, MK, MT, NL, NO, PL, PT, RO, SE, SI, SK, TR), OAPI (BF, BJ, CF, CG, CI, CM, GA, GN, GQ, GW, ML, MR, NE, SN, TD, TG).

Published:

— *with international search report (Art. 21(3))*

— *before the expiration of the time limit for amending the claims and to be republished in the event of receipt of amendments (Rule 48.2(h))*

WO 2009/154456 A1

(54) **Title**: A flexible electronic system for producing a stimulation signal to the human body.

Fig 3b

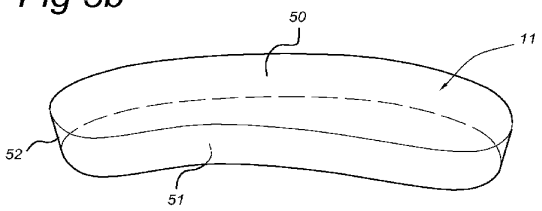

(57) **Abstract**: An implantable electronic system has electronics (12), a detection device (16) and a stimulation device (17) within a casing (11). The electronics (12) receive detected parameter values from the detection device (16) relating to one or more functions of a human body. A controller (20) processes the parameter values and generates a control signal for the stimulation device (17) based on the detected parameter values in accordance with the predetermined function. The casing (11) is made of a flexible material.The casing (11) is made of a flexible biocompatible material, and has an upper surface (50) and a lower surface (51) which are substantially parallel to one another and connected to one another by means of a side surface (52).

A flexible electronic system for producing a stimulation signal to the human body.

Field of the invention

The invention relates to a flexible electronic system for producing a stimulation signal to the human body.

Background of the invention

The present invention relates to a flexible implantable stimulation device.

Many implantable devices are available these days, among which pacemakers and defibrillators. Such devices have been described in a wide variety of documents. Using flexible implantable devices have been disclosed in, for instance, CA 2 507 142 A1 and US 2006/0217779 A1. However, the flexible devices shown in these prior art documents are shaped like a hose and not suitable to be placed in every location in the human body where a stimulation device should be located.

One important location where a stimulation device can be implanted is in the pharyngeal area of the human body to provoke an induced aspiration reflex by a resuscitating stimulation of the respiratory area of the human brain stem, as described in PCT/NL2006/000599, which has not been published prior to the claimed priority date of the application relating to the present invention. Embodiments of the devices described in PCT/NL2006/000599 relate to implantable devices. However, this document is silent as to how such implantable devices may be constructed.

It is observed that auto-optimization of stimulation devices is known as such from WO 2007/146213.

Summary of the invention

To that end, the invention provides an electronic system as claimed in claim 1.

The advantage of using a flexible casing as defined in claim 1 is that it adapts itself to the form of the body where the casing is implanted. Thus, it does not, or hardly, perform any mechanical pressure to the human body after implantation, which would cause discomfort or even undesired stimulation by pressure.

When stimulating a predetermined point of the human body in the course of time, irritation of that point may occur. Moreover, the stimulation effect may reduce in the course of time when stimulation is always applied to the same point. This is especially true for stimulating an area of the pharynx where it is not easy to identify the best location for stimulation and which can be damaged by the stimulation over time easily. Therefore, it is an object of an embodiment of the present invention to provide an improved implantable device with stimulation device that can be used to generate a stimulus to a human brain via an area in the pharynx.

To that end, in an embodiment, the invention provides an electronic system with a stimulation matrix.

The advantage of using a stimulation matrix is that the stimulus can be spread over an area instead of being applied to a point. This reduces irritation when used during longer time periods. Moreover, the applied stimulus pattern can be changed, thus avoiding adaptation of the body to and reduced efficiency of the stimulus. Moreover, integrating the stimulation matrix in the casing of the implantable device saves space and provides a device that can be implanted more easily. Also, stimulation waves of all kinds can be applied from one point to one or more of the other points on the matrix. This can be employed to produce more complex stimulation patterns.

Brief description of the drawings

The invention will be explained in detail with reference to some drawings that are only intended to show embodiments of the invention and not to limit the scope. The scope of the invention is defined in the annexed claims and by its technical equivalents.

Figure 1 is a schematic cross section of a part of the human head and neck.

Figure 2 is a detail from figure 1.

Figure 3a shows a schematic block diagram of an electronic system.

Figures 3b and 3c show alternative shapes of a casing of an implantable device.

Figure 4 shows an example of electronics that can be used in the present invention.

Figure 5 shows a substrate with stimulation units arranged in the form of a matrix.

Figure 6 shows an electronic arrangement according to the invention.

Figure 7 shows a flexible substrate with some electronic components on top of it.

Figure 8 shows a portion of a flexible casing with sensors and stimulation electrodes.

Description of embodiments.

The following detailed specification will explain the invention with reference to a stimulation device being implantable in the pharyngeal area of a subject, although application of the present invention is not restricted to this as will be explained further below.

The brainstem contains a number of central mechanisms regulating a number of vital physiological functions. Disorders in the regulation of the cardio-pulmonary system can result in a number of pathological conditions some of which may be potentially life threatening.

People suffering from sleep apnoea have cardio-pulmonary disorders manifesting with breathing irregularities and even frequent stops of breathing (apnoea), particularly during sleep, but also during the day. The apnoeic episodes during the day-time are less dangerous, because they can be self-managed by conscious actions, apnoeas during the night are more dangerous. Patients can feel very sick in everyday life, due to oxygen deprivation. During episodes of apnoea, blood pressure can collapse and subsequently the heart may stop its function, resulting in inadequate brain perfusion, loss of consciousness and even sudden death. At least 4% of the adult population in developed countries suffers from sleep apnoea.

There are several types of apnoea. One type, central apnoea, involves a dysfunction of the respiratory muscles (including the diaphragm) for lack of command from the

respiratory centre in the brainstem. This is the type occurring in approximately 10 percent of the cases. Another type, obstructive apnoea, occurs in 80% of cases, when in spite of respiratory movements there is no supply of air to the lungs, due to collapse of the upper airways. The third type, a mixed apnoea, occurs in the rest of the patients.

It is known, that apnoea can be counteracted by stimulation of the patient in various ways. In infants shaking is usually enough to arouse the baby from sleep and restart the process of automatic breathing and even provoke gasps, which induces resuscitation from asphyxia. Adults suffering from sleep apnoea now sleep with a mask, tightly connected to the facial contours, so a slight over-pressure of air from a device can continuously be applied (Continuous Positive Airway Pressure- CPAP). This keeps the airways open and allows air supply by spontaneous breathing. In any case these patients have to sleep attached to their breathing apparatus, limiting their freedom of movement during sleep. For patients with sleep apnoea travelling means carrying the breathing apparatus with them. For patients suffering from central sleep apnoea or mixed type sleep apnoea, treatment with CPAP is showing limited success. Modulating the air pressure (BIPAP) offers only a slightly better success rate.

Research in cats has shown that breathing can be stopped by inhalation of anoxic mixtures for over 1 minute, with subsequently a severe drop in blood pressure and heart rate. Mechanical or electrical stimulation of the nasopharynx can induce a sniff- and gasp-like "aspiration reflex" (Tomori and Widdicombe, 1969, Beňačka & Tomori, 1995, Tomori et al. 1995, 1998, 2000). Due to resuscitation effects, the blood pressure returns to normal, heart rhythm normalizes, respiration and neuro-behavioral functions return to normal. The anesthetized cat seems to be in good condition, even after as long as three minutes without adequate blood pressure, heart rate and breathing. This experiment can be repeated over 10 times on the same cat, without any noticeable negative consequences.

Provocation of such an aspiration reflex has been indicated as a possible means for interruption of apnoea in cats (Tomori et al., 1991, 1995, Beňačka & Tomori, 1995, Jakus et al., 2004). Alternatively, similar resuscitation may be induced by (electro)-

acupuncture, (electro)-acupressure or mechanical stimulation of the nasal philtre in cats, inducing spasmodic inspiration (Beňačka & Tomori, 1997).

The present invention relates to devices that are, among others, suitable for inducing autoresuscitation in a subject in need thereof. The term autoresuscitation should be understood to comprise resuscitation by activation of natural compensatory mechanisms of the human organism via inducing a sniff- and/or gasp-like aspiration reflex, or its alternative forms in various species, similar to that provided by means of spontaneous gasping autoresuscitation observed in non-human animals and human infants (Sridhar et al., 2003; Xie et al., 2004). When referring to induction of autoresuscitation in this specification the term resuscitation may be used. Subjects that may benefit from induction of autoresuscitation are subjects suffering from and/or having a predisposition for functional disorders, such as hyper and hypo-function of the: a) respiratory system, b) cardiovascular system, c) neurobehavioral changes and d) psychiatric disorders. These include one or more of apnoea, transient ischemic attacks (TIA), bronchospasm also in asthmatics, laryngospasm, hiccup, tremor associated with Parkinson's disease, epileptic seizure, absence type epilepsy, migraine, hypotension, syncope, haemorhagic shock (loss of blood), alternating hemiplegia, Alzheimers disease, depression, anorexia nervosa, bulimia, autism, psychiatric disorders, sleep paralysis, insomnia, comatose states.

It is believed that the "aspiration reflex", via strong activation of the inspiratory centre, causes the controlling functions of the brainstem to be reset, similar to activation of brainstem centres during autoresuscitation induced by gasping. In rapid and strong inspiratory efforts during a gasp or a provoked aspiration reflex, activation of the inspiratory centre in the brainstem resets the failing centres of other vital functions, including the centres controlling cardiac activity, blood pressure, as well as various neuropsychic and somato-motor functions.

As indicated in PCT/NL2006/000599 referred to in the introduction of the present document, without wishing to be bound by any theory, it is believed that inducing the aspiration reflex may be helpful in relation to the following 5 groups of disorders of the human body.

1. In patients with apnoea and hypopnoea caused by transient inactivity of the inspiratory neurons in the brainstem, induction of the aspiration reflex can reverse the apnoea or hypopnoea and restore spontaneous breathing. In patients with obstructive apnoea, the stimulation of the inspiratory centre in the brainstem may reverse the closure of the airways and restore normal breathing.
2. In patients with Transient Ischemic Attack (TIA), syncope, hypotension, migraine and hemorrhagic shock the aspiration reflex activates, via the respiratory centre, the brainstem vasomotor centre to evoke peripheral vasoconstriction and vaso-dilatation in the brain and heart, resulting in increase of blood pressure and consequently increased brain and heart perfusion, interrupting, terminating or at least alleviating the pathological condition.
3. Bronchospasm, laryngospasm, hiccup, epileptic seizures, and tremor in Parkinson's disease may be inhibited by impulses from the inspiratory centre via the reticular formation, transmitted through interneurons providing inhibitory influence to the relevant control centres in the brainstem and elsewhere.
4. In alternating hemiplegia, sleep paralysis and absence type epilepsy: stimulation via the inspiratory centre and interneurons activates the descending part of the reticular formation, which activates motoneurons, terminating, or at least alleviating the attack.
5. In comatose states, depression, insomnia, Alzheimers disease, anorexia nervosa, bulimia, and autism, stimulation via the inspiratory centre and interneurons influences the ascending part of the reticular formation. This inhibits or provides relief in depression, bulimia, anorexia nervosa and increases concentration and other cognitive functions. This improves some comatose states, may inhibit the development of Alzheimer's disease and autism and has a positive influence on insomnia and psychiatric disorders.

Resuscitating stimulation of the inspiratory neurons of the brainstem should be understood to mean stimulation of the human body such that the aspiration reflex or its

alternatives are induced, which will influence various brainstem centres. Through such stimulation other parts of the brain relevant for the conditions treatable with the device are influenced. The aspiration reflex and its alternatives have as a common feature strong and short inspiratory efforts comparable to that occurring before or during one or more of gasp, sniff, sigh or augmented breath.

In accordance with a first embodiment of the present invention, the device is designed to provide resuscitating stimulation in the area of the pharynx. As shown in figure 1 the pharynx of the human body is situated from the underside of the skull to the level of cervical vertebra C6. The pharynx may be divided in three compartments, the nasopharynx (roughly situated behind the nasal cavity between arrows 1 and 2), the oropharynx (roughly situated behind the oral cavity between arrows 2 and 3) and the laryngopharynx (roughly situated behind the larynx between arrows 3 and 4).

Figure 2 shows the preferred location of resuscitating stimulation of the pharynx. Resuscitating stimulation is preferably administered in the area of the nasopharynx enclosed by reference marks A, B, C, D surrounding the tuba auditiva 5. More preferably resuscitating stimulation is administered in the direct proximity of the tuba auditiva 5 indicated by the hatched lines in figure 2.

Figure 3a shows a schematic overview of an implantable device 10 with a casing 11. Enclosed in the casing 11 is a battery 13 which is connected to electronics 12. The battery 13 may comprise lithium iodine with nanocrystaline cathode components, as generally used in cardiac pacemakers. The electronics 12 are connected to a detection device 16 via suitable wires 14, as well as to a stimulation device 17 via suitable wires 15.

Figure 3b shows a first physical embodiment of the casing 11 of the present invention. The casing 11 is made of a flexible biocompatible polymer like silicone. However, the invention is not restricted to silicone. Other such flexible biocompatible materials known to persons skilled in the art or still to be developed may be used instead. The form of the casing 11 is box shaped. I.e., casing 11 has an upper surface 50 and a lower surface 51 which are substantially parallel and connected to one another via a side

surface 52. The casing is designed such that it is flexible in three dimensions. The embodiment shown in figure 3b is shaped such that the upper surface 50 and lower surface 51 are either circular or oval.

Figure 3c shows an alternative embodiment in which the upper surface 50 and lower surface 51 have rectangular shape.

It is observed that the invention is not restricted to the shapes shown in figures 3b and 3c. Every box shaped form of casing 11 is considered to fall within the scope of the present invention where the box has substantially parallel upper and lower surfaces. Moreover, side surface 52 need not be flat but may be curved seen in a cross sectional view in a direction perpendicular to upper surface 50 and lower surface 51.

Is will be evident to persons skilled in the art, the flexible casing 11 as proposed by the present invention is very suitable to be used in an implantable device 10 to be implanted in body areas as volatile as a (human) pharynx. Due to the flexibility, its form adapts itself to the surrounding tissue thus causing less irritation and health problems than in cases where a non-flexible casing is used.

The electronics 12 may be implemented by means of an analogue circuit, a digital circuit or a computer arrangement with a processor instructed by a suitable computer program, or any combination thereof. Figure 4 shows an embodiment based on a computer arrangement.

As shown in figure 4, the electronics 11 comprise a controller, e.g., in the form of a microprocessor 20 which is connected to a memory 21. Moreover, the microprocessor 20 is connected to a wave function generator 23 via suitable wires 22, which has an output connected to the wires 15 that are connectable to stimulation device 17.

The memory 21 may be implemented as several memory units of different types (RAM, ROM, etc.). The memory 21 stores instructions of a program to allow the microprocessor 20 to perform one or more functions. Optionally, memory 21 stores a number of detected parameter values as obtained from detection device 16. The

memory 21 may be any suitable memory for storing a predetermined function such as a computer readable memory. The predetermined function may be a mathematical function or correlation. Suitable functions may be functions that are suitable for determining whether a determined parameter value is equal to, greater than or smaller than a predetermined threshold value. Based on his knowledge the skilled person will be able to determine suitable functions on the basis of which a response is required as a function of determined parameter values of parameters sensed by the detection device 16. E.g. the function may relate the absence of certain parameter values below a certain threshold value to a certain time frame. Such a function may be determined to detect the absence of breathing during a certain time period e.g. 2 seconds and longer, 5 seconds and longer or 10 seconds and longer.

Based on the program as stored in the memory 21, the microprocessor 20 is able to process the number of detected parameter values as obtained from the detection device 16 in said function. For this, the detected parameter values are loaded into the microprocessor 20 either directly from the detection device 16 or alternatively from the memory 21 into which the detected parameter values were previously loaded. The function is loaded in the microprocessor 20 from the memory 21 or in an alternative embodiment the predetermined function may be embedded in said microprocessor 20. In the latter embodiment at least one memory is (partially) integrated in the microprocessor 20.

The detection device 16 may be any suitable device for detecting a number of parameter values. In the present specification, a "number" shall mean one or more unless explicitly stated otherwise. In use, the detection device 16 provides an output signal on wire 14, representing determined parameter values in response to determined parameter values. The determined parameter values are values of a parameter as measured/determined by the detection device 16 within a certain time frame. The parameter may be any parameter on the basis of which it may be determined whether a subject is in need of induction of autoresuscitation.

Parameters suitable for determining whether a subject is in need of resuscitation are parameters corresponding to electrical activity recorded from, for instance, the pharynx

indicating a level of cerebral activity. Suitable devices for detecting electrical activity from the surface of the pharynx are conductive patches connected to a suitable amplifier and filter. Alternatively, sensors may be anchored inside the nasopharynx. The microprocessor 20 is arranged to, as instructed by a suitable program stored in memory 21, receive values of such parameters from the detection device 16 and establish whether or not the subject is in need of autoresuscitation. However, the detection device may, alternatively, be arranged to detect at least one of a gas flow, a gas composition, a gas pressure, a gas temperature, a body temperature, a body part movement and sound. Signals delivered by detecting device 16 may, thus, be a measure of breathing activity, EEG data, EMG data, ECG data, or neural activity.

The stimulation device 17 is arranged to provide a response as a function of the number of processed parameter values as instructed by a suitable control signal received from electronics 12. The stimulation device 17 comprises a number of stimulation units which may be designed to provide resuscitating stimulation in order to stimulate and/or reactivate the inspiratory centre of the brainstem. The primary preferred stimulation as provided by the stimulation device 17 goes from the upper airways, preferably the pharynx, to the inspiratory centre in the brainstem. In the brainstem there are other controlling centres, such as the vasomotor centre and the neurons controlling cardiac activity, which will as a result also be influenced secondarily to the stimulation of the inspiratory centre. Furthermore, the inspiratory centre is connected by interneurons to the reticular formation (RF). The descending part of the RF connects to the peripheral nervous system, such as various motor and sensory neurons; the ascending part connects to higher centres controlling e.g. sensation, perception and cognitive functions.

Stimulation of certain locations distant from the brainstem, like in the pharynx, results in induction of resuscitation because in certain locations of the mammalian body afferent nerves connected to the inspiratory centre of the brainstem are present. Stimulation of such afferent nerves or their receptive zones results in activation of the inspiratory centre of the brainstem and through this in influencing of the other centres in the brainstem and other parts of the brain such that resuscitation and/or autoresuscitation may be induced.

Stimulation of the nasopharynx, more preferably the part of the nasopharynx in the proximity of the tubae auditivae, is a suitable option as it provides the strongest resuscitation effect with induction of the aspiration reflex.

The stimulation device 17 may be a mechanical or an electrical stimulation device. The electrical stimulation device may include a separate power source. A suitable power source may be an array of charged capacitors connected to a battery, allowing voltage selection for the stimulation, in case spikes are used. This separate power source may, alternatively, be absent in which case the stimulation device 17 will be connected to the battery 13 within casing 11 via wiring 15. The wave generator 23 as shown in figure 4 may be part of the stimulation device 17. In combination with such a power source, the wave generator 23 is arranged to produce a desired control signal for the stimulation device 17, for instance in the form of block waves, sinus waves or spikes of different length, frequency and amplitude, or combinations thereof.

Figure 5 shows a stimulation matrix 40 which is used in an embodiment of the invention. The stimulation matrix 40 is connected to the stimulation device 17. As shown in figure 5, the stimulation matrix 40 has a substrate 42 provided with a plurality of stimulation units 43(i), i = 1, 2, 3, …, I. The stimulation units 43(i) are arranged in a matrix form. The arrangement shown comprises stimulation units 43(i) in a regular matrix pattern. However, the invention is not restricted to this arrangement. Irregular patterns may be used instead.

In an embodiment, the stimulation units are stimulation electrodes 43(i) for delivering an electrical stimulation to the body of the subject. Such electrodes 43(i) receive suitable stimulation signals via wires 41 from electronics 44 within stimulation device 17 based on the control signal received from the electronics 12 via wire 15. Electrodes 43(i) may be mono-polar or multipolar, including bipolar electrodes, and may, in use, be placed on the surface of the pharynx. For stimulation of the pharynx the electrodes may be anchored in the subject's pharynx.

By using a plurality of stimulation electrodes 43(i) arranged in the form of a two dimensional matrix more complex stimulation currents can be provided to the body. This also provides the possibility of precise definition of the area to be stimulated. There is some distance between the electrodes 43(i). Due to this distance the electrical current will travel over that distance through the subject's body. This may enhance the stimulatory effect. It also allows to let the device auto-optimise the stimulation position, by optimising the effect as measured by the detection devices, as explained hereinafter.

If spikes are used for the control signal, variations in the amplitude and duration of the spikes, i.e. the amount of energy can be made, apart from trains of spikes over an extended period of time (seconds) (Beňačka and Tomori, 1995). Sinus waves of various frequencies and duration, block waves, spikes, spike trains and any combination of these can be used. It is preferred to not just transfer energy, but to stimulate the targeted response centres more complexly to elicit the desired physiological response.

In an embodiment, the microprocessor 20 is designed to activate the wave function generator 23 if an EMG as detected by detection device 16 does not satisfy a predetermined criterion, such as a lack of normal EMG activity for >10 sec (central apnoea) or extremely strong EMG activity accompanied by stop of airflow (obstructive apnoea) as detected by detection device 16. Then, upon activation the wave function generator 23 may generate the control signal in the form of a predetermined wave, such as a sinus wave, block wave, spike train or any combination in a suitable frequency, duration and amplitude that is guided through electrical wires 41 to its stimulation electrode.

In an embodiment, the stimulation units 43(i) are mechanical stimulation units arranged to provide a mechanical stimulus to the human body. Such mechanical stimulation units 43(i) may be formed by electrostriction components which produce a mechanical movement when excited by an electrical current. Such mechanical stimulation units 43(i) may have the form of needles.

An implantable device 10 according to the invention may be a fully integrated implantable device. Such a fully integrated implantable device is shown in figure 6 in which like components as in figure 3 are indicated with the same reference numbers, however provided with a prime. As shown in figure 6, the casing 11' of such a device 10', then, accommodates all components including the detection device 16', the electronics 12', the battery 13' and the stimulation device 17'. The battery 13' is shown to be connected to the electronics 12' but may equally well be connected to the detection device 16' and the stimulation device 17'.

Moreover, the casing 11' is shaped and made like casing 11.

The casing 11' may be partly conductive. For instance, the casing 11' may be provided with sensors 33 in the form of conductive areas, for instance in the form of conductive pads on the casing 11'of the detection device 16' and operating as sensors to detect electric activity of the human body e.g. for the detection of an EEG. The sensors 33 may be formed by providing suitable conductive coating portions on casing 11'. If the casing itself is also conductive, or in part conductive, then, sensors 33 should be electrically isolated from the casing 11'. However, the invention is not restricted to this embodiment. Cf. for instance figure 8. It is observed that one or more of the sensors could be arranged such as to be usable as stimulators too. This also holds for other embodiments explained here.

In an alternative embodiment, the detection device 16' is connected to one or more small microphones to sense sound, small piezo-electric sensors to convert mechanical pressure into electric signals, or strain gages, etc. that are integrated in or placed on top of the casing 11'.

Alternatively, the detection device 16' is connected to a sensor to measure oxygen saturation in the blood of the subject. This can be done in any way known to a person skilled in the art. In the embodiment where the apparatus is implanted in the pharyngeal area this is possible with a sensor having a light source directed to a blood vessel, as is evident to persons skilled in the art. Measuring oxygen saturation is a good indication of whether or not apnoea is present.

Sensors arranged in a matrix arrangement may especially be suitable to measure EMG or neural activity.

The casing 11' is also provided with the stimulation units 43(i) connected to the stimulation device 17' which may be arranged in the form of a matrix and used to guide an electric stimulation current to the part of the pharynx in its direct proximity. The stimulation units 43(i) may also be formed by providing suitable conductive coating portions on casing 11'. If the casing itself is also conductive, then, sensors 33 should be electrically isolated from the casing 11'. However, the invention is not restricted to this embodiment. Cf. for instance figure 8.

Both the sensors 33 and the stimulation units 43(i) may be provided on a separate, insulating, flexible substrate 42 (cf. figure 5) which is attached to the outside of the casing 11'. The wirings to the detection device 16' and stimulation device 17', respectively, are then guided through suitable through holes in casing 11'.

The sensors 33 may also be arranged in a two dimensional matrix. The sensors 33 and the stimulation units 43(i) may be arranged in matrices separate from one another. However, they may be arranged in a single mixed matrix arrangement with a plurality of electrically conductive areas where some of the electrically conductive areas are connected as sensors 33 and the others as stimulation units 43(i).

In an embodiment, the device 10' is designed to be implanted in the pharyngeal area of the human body where electric stimulation may suitably be applied to obtain resuscitating stimulation of the respiratory area of the brainstem with an induction of an aspiration reflex, e.g. in the nasopharyngeal area.

To that effect the flexible casing 11' of the device will easily adapt to the local form of the pharyngeal area of the body concerned. The area on the casing 11' where the sensors 33 and the stimulation units 43(i) are located is arranged to cover the pharyngeal area A-B-C-D as indicated in figure 2, and preferably at least the area in the

direct proximity of the tuba auditiva 5, for instance within a distance of 5 mm from the tuba auditiva 5.

The flexible casing 11' may be designed to be implantable in or behind the nasopharynx. In an embodiment, the casing 11, 11'is sized and designed such that it may be implanted in or behind the nasopharynx via a human nose or throat.

As indicated above, the casing 11' that accommodates electronics 2' and battery 13' is made of a flexible material. A suitable material is silicone since that is found to be well tolerated by the human body. However, other flexible biocompatible materials tolerated by the human body may be used instead.

The advantage of using a flexible casing 11' is that it can well be used in implantable devices: it adapts itself to the form of the body where the casing 11' is implanted. Thus, it does not, or hardly, perform any mechanical pressure to the human body after implantation, which would cause discomfort or even undesired stimulation by pressure.

In an embodiment, the battery 13' may be made flexible too. Alternatively, many small batteries may be joined to form a virtually flexible battery pack. From cardiac pacemakers it is known that the battery life can be as long as 10 years. With devices for resuscitating stimulation of the inspiratory neurons of the brainstem the battery life can be expected to be much longer, or the device can be made much smaller, as it does not have to stimulate as often as a cardiac pacemaker. In cardiac pacemakers, approximately 70% of the pacemaker's volume is taken up by the battery and connectors.

The electronics 12' may be made of flexible components as well or at least electronic components may be provided on a flexible substrate, e.g., a flexible printed circuit board 30. Figure 7 shows such a flexible substrate 30 having electronic components 31 located on at least one surface of the substrate 30.

As shown in figure 6, the stimulation device 17' is located inside the casing 11' too and is made of electronic components on a flexible substrate too. Then, the stimulation device 17' may be arranged as shown in figure 7 as well.

The electronic components of the electronics 12' may be arranged on a first flexible substrate and the stimulation device 17' may be arranged on a second flexible substrate. However, these first and second substrates may be a single substrate. The battery 13' may be provided on that substrate too.

As also shown in figure 6, the detection device 16' is located inside the casing 11' too and is made of electronic components on a third flexible substrate. Then, the detection device 16' may be arranged as shown in figure 7 as well. The substrates with the electronic components of the electronics 12', the detection device 16' and the stimulation device 17' may be separate substrates. Alternatively, however, they may be one single substrate.

In the embodiment where the casing is made of silicone and the stimulation units are stimulation electrodes 43(i), these stimulation electrodes 43(i) can be made as electrically conductive silicone portions in the silicone casing 11, 11'. This can be done by providing silicone portions of the casing 11, 11' with doping materials like titan or platina. Such an embodiment is shown in Figure 8. Figure 8 shows a portion of a cross section of the flexible casing 11, 11' with sensors 33 and stimulation electrodes 43(i). In this embodiment, both the casing 11, 11' and the sensors 33 and the stimulations electrodes 43(i) are made of silicone. They are all produced from a silicone substrate in which predetermined portions are doped with a suitable doping material like titan or platina to become sensors 33 and stimulation electrodes 43(i). Suitable conductive wirings are connected to these latter portions for electrically connecting the sensors 33 to the detection device 16, 16'and the stimulation electrodes 43(i) to the stimulation device 17, 17'.

Such a device can be made auto-optimizing. The electronics 12, 12' can be arranged to perform a feedback measurement, such that stimulation can be performed at a point where the aspiration reflex can be elicited best. In one embodiment the electronics will,

through a suitable sensor, register the strength of the aspiration reflex; this can for example be performed by measuring airflow through the nose or mouth, measuring sound, heart rate, blood pressure etc. Impedance of the stimulation point may be a guide for finding the optimal point. In this case the device may use impedance measurement to find suitable points for stimulation.

The electronics 12, 12' can be arranged to send different types of stimulation signals to the stimulation units 43(i), either in form or in amplitude or both. The effect of the different stimulation signals per stimulation unit 43(i) can be measured by detection device 16, 16' and be evaluated by electronics 12, 12'. Electronics 12, 12' can be programmed to amend these stimulation signals by amending its control signal as output to the stimulation device 17, 17'.

Moreover, the electronics 12, 12' can be programmed to randomly vary its generated control signal such that the stimulation signals produce random stimuli over the area of the pharynx stimulated by the stimulation units 43(i). This could reduce adaptation of the pharynx to the generated stimuli and, thus, enhance efficiency of the device 10, 10'.

The method according to the invention is suitable for the treatment of several disorders including one or more of but not limited to apnoea, such as central apnoea or obstructive apnoea, transient ischemic attacks (TIA), hypotension, syncope, haemorhagic shock (loss of blood), bronchospasm, laryngospasm, hiccup, tremor associated with Parkinson's disease, epileptic seizure, absence type epilepsy, migraine, alternating hemiplegia, Alzheimers disease, depression, anorexia nervosa, bulimia, autism, psychiatric disorders, insomnia, sleep paralysis, comatose states. As used in this specification the term treatment should be construed to encompass alleviation of discomfort or provide reversal of life threatening functional disorders. Depending on the application concerned, the microprocessor 20 is programmed to analyse received signals from sensors 33 and establish from them whether or not the subject concerned is in need of autoresuscitation. If so, the microprocessor 20 will produce suitable control signals and send them to the stimulation device 17, 17' which, then, produces suitable stimulation signals for the stimulation units 43(i).

It should be understood that the embodiments presented in the examples above are solely intended to illustrate the present invention and are not intended to limit the scope of the invention which is only limited by the annexed claims and its technical equivalents.

For instance, the device as presented above, can be used in a pacemaker arrangement where at least the electronics 12 are located within the flexible casing 11 but the stimulation device 17 is outside casing 11. If so, the sensors may located outside the casing 11 as well or on top of or in casing 11 to sense parameters indicating whether or not the subject concerned is in need of a pacemaker stimulation signal. The stimulation device 17 may have any form suitable to provide the heart with a suitable pacing signal, as known from the prior art. In that case, the detecting device 16, 16' is at least arranged to sense an ECG signal from some part of the subject's body. Sensing and pacing may be done by one single electrode located in the heart wall as is known to a person skilled in the art.

Moreover, the device 10, 10' may be implanted at other locations in the subject to stimulate one or more predetermined nerves, etc.

References

Arita H., Oshima T., Kita I., Sakamoto M.: Generation of hiccup by electrical stimulation in medulla of cats. Neurosci. Lett. 175: 67-70, 1994.

Batsel H.L., Lines A.J.: Bulbar respiratory neurons participating in the sniff reflex in the cat, J. Exper. Neurol 39:469-481,1973`

R. Beňačka, Disorders of central regulation of breathing and their influencing by upper airway reflexes (in Slovak). Orbis Medince S; No. : 53 – 63, 2004,

R. Beňačka and Z. Tomori, The sniff-like aspiration reflex evoked by electrical stimulation of the nasopharynx, Respir. Physiol. 102: 163-174, 1995.

J. Jakuš, Z. Tomori and A. Stransky, Neural determinants of breathing, coughing and related motor behaviours, Monograph, Wist, Martin, 2004.

Sridhar R., Thach B.T. et al.: Characterization of successful and failed autoresuscitation in human infants including those dying of SIDS. Pediatr. Pulmon. 36:113-122, 2003.

St John W.M. , Bledsoe T.A., Sokol H.W: Identification of medullary loci critical for neurogenesis of gasping J. Appl. Physiol. 56: 1008-1019, 1984.

Z. Tomori, M. Kurpas, V. Doni. and R. BeÁa.ka, Reflex reversal of apnoeic episodes by electrical stimulation of upper airway in cats, Respir. Physiol. 102: 175-185, 1995.

Z. Tomori, R. Beňačka, V. Doni. and J. Jakuš, Contribution of upper airway reflexes to apnoea reversal, arousal, and resuscitation, Monaldi Arch. Chest Dis. 55: 398-403, 2000.

Z. Tomori, R. Beňačka and V. Doni., Mechanisms and clinicophysiological implications of the sniff- and gasp-like aspiration reflex, Respir. Physiol. 114: 83-98, 1998.

Z. Tomori and J.G. Widdicombe, Muscular, bronchomotor and cardiovascular reflexes elicited by mechanical stimulation of the respiratory tract, J. Physiol 200: 25-49, 1969.

Xie J., Weil M.H., Sun S., Yu T., Yang W.: Spontaneous gasping generates cardiac output during cardiac arrest, Crit. Care Med. 32: 238- 240, 2004.

Claims

1. Implantable electronic system comprising:
   - a casing (11; 11'),
   - a detection device (16; 16') connected to at least one sensor (33),
   - a stimulation device (17; 17') connected to at least one stimulation unit (43(i)),
   - electronics (12; 12') arranged within said casing (11; 11') and arranged to receive one or more detected parameter values from said detection device (16; 16') relating to one or more functions of a subject, and comprising a controller (20) for processing the number of detected parameter values and to generate a control signal for said stimulation device (17') based on said detected parameter values in accordance with said predetermined function,

wherein said casing (11; 11') is made of a flexible biocompatible material, and has an upper surface (50) and a lower surface (51) which are substantially parallel to one another and connected to one another by means of a side surface (52).

2. Implantable electronic system according to claim 1, wherein the upper and lower surfaces (50, 51) have a shape selected from a circular shape, an oval shape and a rectangular shape.

3. Implantable electronic system according to claim 1 or 2, wherein the detection device (16') is located within said casing (11'), the at least one sensor (33) being arranged either embedded in or provided on at least one of said lower, upper and side surfaces of the casing (11').

4. Implantable electronic system according to claim 1, 2 or 3, wherein the stimulation device (17') is located within said casing and connected to a plurality of stimulation units (43(i)) arranged in a matrix arrangement either embedded in or provided on at least one of said lower, upper and side surfaces of said casing (11').

5. Implantable electronic system according to any of the preceding claims, wherein the casing (11') is designed to be implantable in a human pharyngeal area.

6. Implantable electronic system according to claim 1, wherein the detection device (16') is located within said casing (11'), the at least one sensor (33) being arranged either embedded in or provided on at least one of said lower, upper and side surfaces of the casing (11'), the stimulation device (17') is located within said casing and connected to a plurality of stimulation units (43(i)) arranged in a matrix arrangement either embedded in or provided on one of said lower, upper and side surfaces of said casing (11'), and the system is designed to be implantable in a human pharyngeal area via either a human nose or a human throat.

7. Implantable electronic system according to claim 4 or 6, wherein the stimulation units (43(i)) are located on a flexible substrate (42) attached to said casing (11').

8. Implantable electronic system according to claim 4 or 6, wherein said casing (11') is a silicone casing and said stimulation units (43(i)) are electrodes which are electrically conductive silicone portions in said silicone casing (11').

9. Implantable electronic system according to claim 4, 6, 7 or 8, wherein said system is arranged as an auto-optimizing system, and said stimulation system is arranged to identify a best location to provide a stimulus based on feedback signals from the detection device.

10. Implantable electronic system according to any of the preceding claims, wherein said electronics (12; 12') comprise electronic components (31) on a further flexible substrate (30).

11 Implantable electronic system according to claim 3 or 6, wherein said casing (11') is a silicone casing and said at least one sensor (33) comprises one or more electrically conductive silicone portions in said silicone casing (11').

12. Implantable electronic system according to any of the preceding claims, wherein the detector device (16') is one of a cerebral activity sensor arranged to sense EEG signals, an EMG sensor, an ECG sensor, a sensor to measure temperature, a sensor to measure pressure, a sensor to measure neural activity and a sound sensor.

13. Implantable electronic system according to any of the preceding claims, wherein the controller (20) and the stimulation device (17') are arranged to generate randomly varying stimulation signals.

14. Implantable electronic system according to any of the preceding claims, wherein the at least one sensor (33) comprises a plurality of sensors arranged in a matrix arrangement.

15. Implantable electronic system according to claim 1, wherein the at least one sensor comprises a plurality of sensors (33) and the at least one stimulation unit comprises a plurality of stimulation units (43(i)), the plurality of sensors and the plurality of stimulation units being arranged in a mixed matrix arrangement.

16. Implantable electronic system according to any of the preceding claims, wherein the controller (20) is arranged to establish whether said subject is suffering from at least one of a set of disorders including apnoea, such as central apnoea or obstructive apnoea, heart failure, transient ischemic attacks (TIA), hypotension, syncope, haemorhagic shock, bronchospasm, laryngospasm, hiccup, tremor associated with Parkinson's disease, epileptic seizure, absence type epilepsy, migraine, alternating hemiplegia, Alzheimers disease, depression, anorexia nervosa, bulimia, autism, psychiatric disorders, insomnia, sleep paralysis, comatose states.

*****

Fig 1

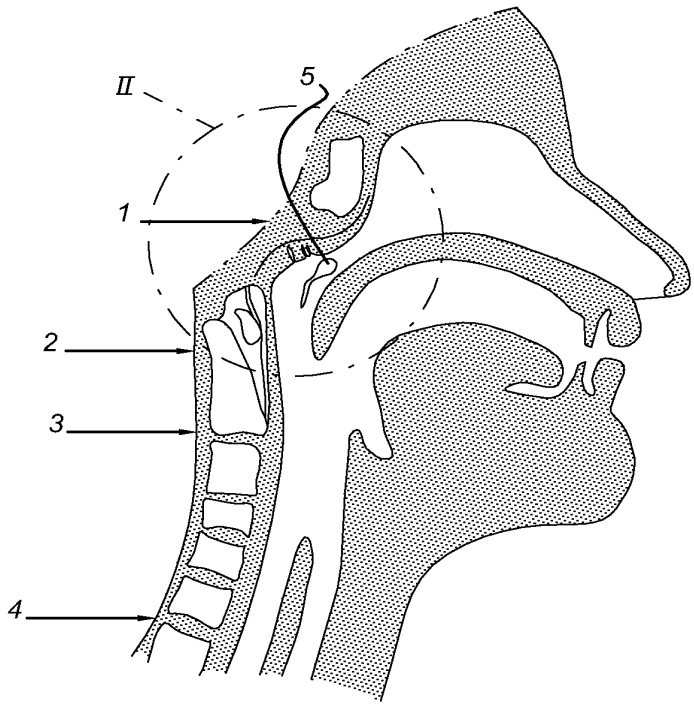

Fig 2

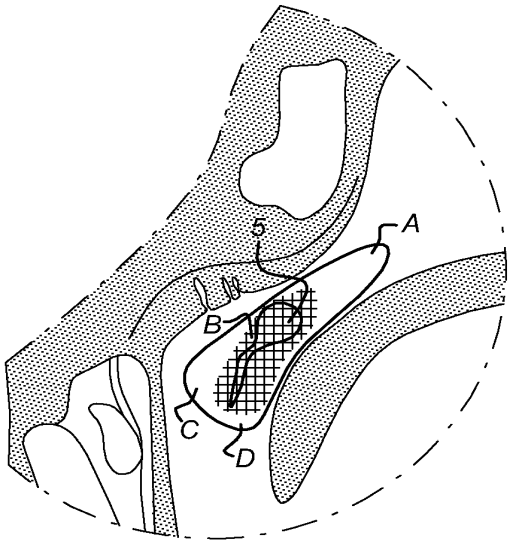

Fig 3a

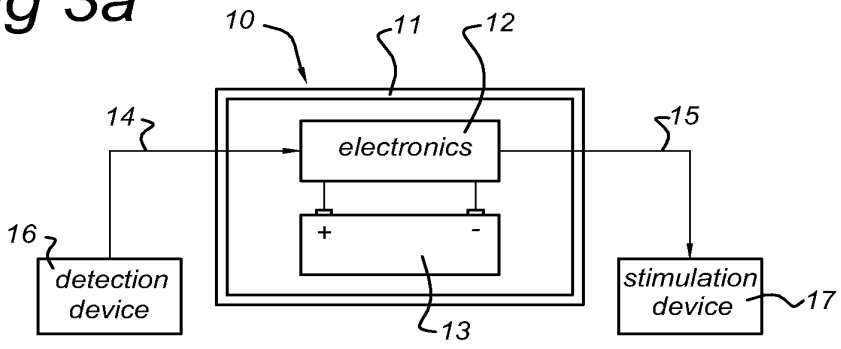

Fig 3b

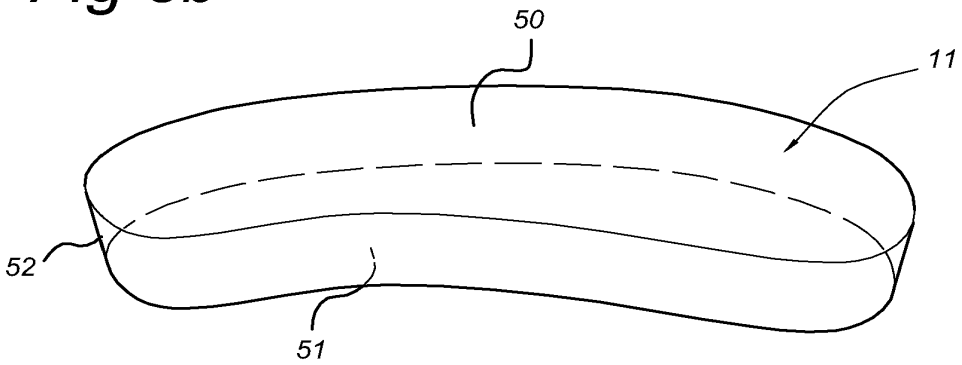

Fig 3c

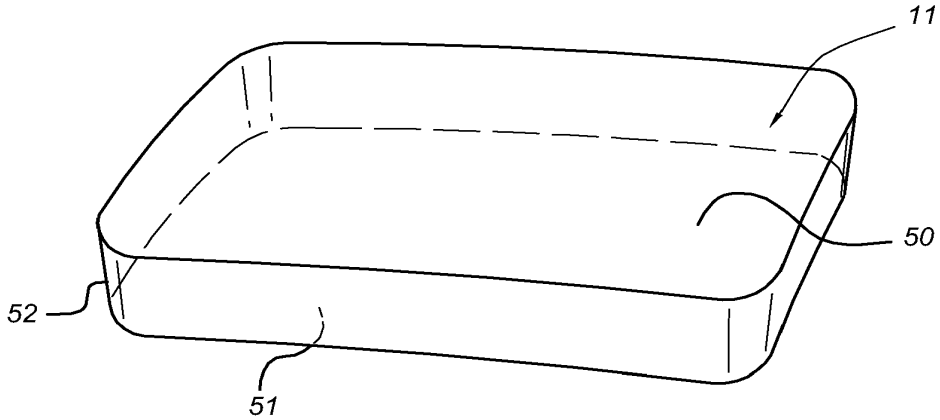

Fig 4

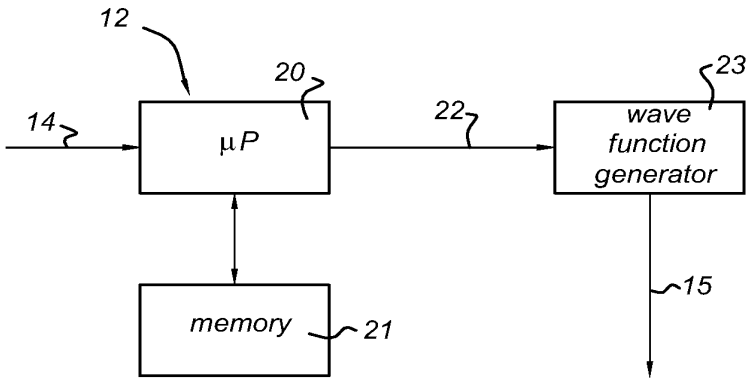

Fig 5

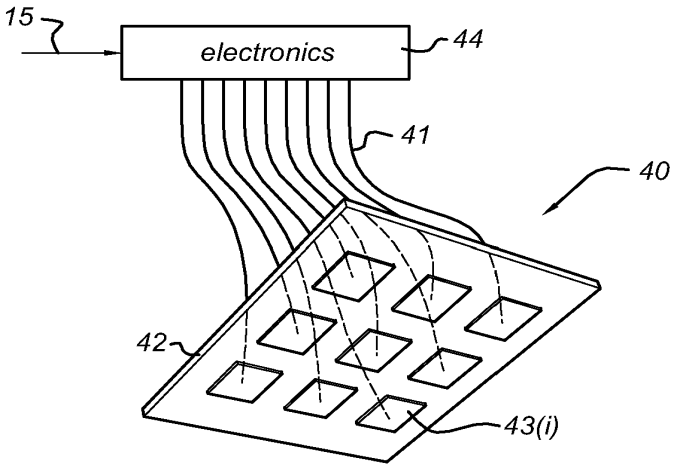

Fig 6

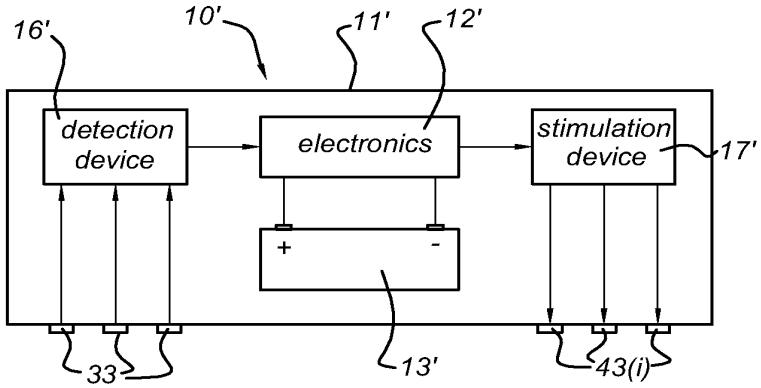

Fig 7

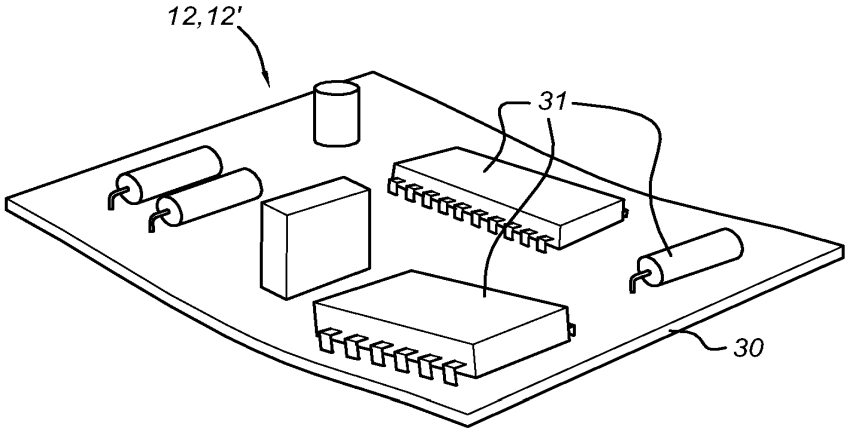

Fig 8

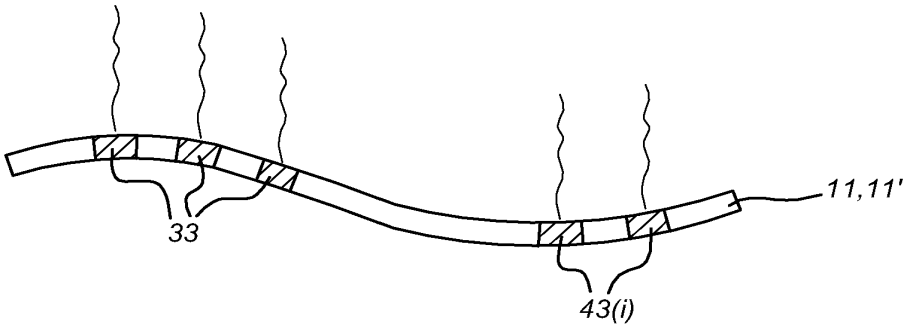

INTERNATIONAL SEARCH REPORT

International application No
PCT/NL2009/050356

A. CLASSIFICATION OF SUBJECT MATTER
INV. A61B5/00 A61N1/375 A61N1/05

According to International Patent Classification (IPC) or to both national classification and IPC

B. FIELDS SEARCHED

Minimum documentation searched (classification system followed by classification symbols)
A61B A61N

Documentation searched other than minimum documentation to the extent that such documents are included in the fields searched

Electronic data base consulted during the international search (name of data base and, where practical, search terms used)
EPO-Internal

C. DOCUMENTS CONSIDERED TO BE RELEVANT

Category*	Citation of document, with indication, where appropriate, of the relevant passages	Relevant to claim No.
P,X	WO 2008/157435 A (NORTHSTAR NEUROSCIENCE NC [US]; SLOAN LEIF R [US]; FOWLER BRAD [US]) 24 December 2008 (2008-12-24) page 2, line 13 pages 9,10,11 page 12, line 9 page 13, line 21 page 15, lines 1,2,8,9 page 17, line 25 page 18, line 15 page 19, lines 12,18 figures 2A,5	1-4,6-8, 11-16
X	US 2004/176673 A1 (WAHLSTRAND CARL D [US] ET AL) 9 September 2004 (2004-09-09)	1,2
Y	paragraphs [0042], [0048], [0051], [0052], [0054], [0070]; figures 3,5,7B	5,9,10
	-/--	

[X] Further documents are listed in the continuation of Box C.

[X] See patent family annex.

* Special categories of cited documents :

"A" document defining the general state of the art which is not considered to be of particular relevance

"E" earlier document but published on or after the international filing date

"L" document which may throw doubts on priority claim(s) or which is cited to establish the publication date of another citation or other special reason (as specified)

"O" document referring to an oral disclosure, use, exhibition or other means

"P" document published prior to the international filing date but later than the priority date claimed

"T" later document published after the international filing date or priority date and not in conflict with the application but cited to understand the principle or theory underlying the invention

"X" document of particular relevance; the claimed invention cannot be considered novel or cannot be considered to involve an inventive step when the document is taken alone

"Y" document of particular relevance; the claimed invention cannot be considered to involve an inventive step when the document is combined with one or more other such documents, such combination being obvious to a person skilled in the art.

"&" document member of the same patent family

Date of the actual completion of the international search	Date of mailing of the international search report
24 July 2009	16/10/2009

Name and mailing address of the ISA/	Authorized officer
European Patent Office, P.B. 5818 Patentlaan 2 NL – 2280 HV Rijswijk Tel. (+31–70) 340–2040, Fax: (+31–70) 340–3016	Visser, Rogier

Form PCT/ISA/210 (second sheet) (April 2005)

INTERNATIONAL SEARCH REPORT

International application No
PCT/NL2009/050356

C(Continuation). DOCUMENTS CONSIDERED TO BE RELEVANT

Category*	Citation of document, with indication, where appropriate, of the relevant passages	Relevant to claim No.
X	EP 1 825 880 A (METACURE LTD [BM]) 29 August 2007 (2007-08-29) paragraphs [0078], [0124], [0128], [0137], [0160]; figures 3,4C,4E	1,3,7
A	TOMORI ET AL: "Hypoxic apnoea induced by N2 inhalation can be reversed by the aspiration reflex in anaesthetized cats" RESPIRATORY MEDICINE, BAILLIERE TINDALL, LONDON, GB, vol. 85, 1 January 1991 (1991-01-01), pages 61-65, XP022012786 ISSN: 0954-6111 page 61, column 2	5,16
Y	US 2008/103545 A1 (BOLEA STEPHEN L [US] ET AL) 1 May 2008 (2008-05-01)	5
A	paragraphs [0081], [0128]; figures 5,26C,28	2
A	US 2003/100930 A1 (COHEN EHUD [IL] ET AL) 29 May 2003 (2003-05-29) paragraph [0189]; figure 1	2
Y	US 5 957 956 A (KROLL MARK W [US] ET AL) 28 September 1999 (1999-09-28) column 13, line 1	10
Y	US 2006/206162 A1 (WAHLSTRAND CARL D [US] ET AL) 14 September 2006 (2006-09-14) paragraphs [0094], [0096]	9

Form PCT/ISA/210 (continuation of second sheet) (April 2005)

INTERNATIONAL SEARCH REPORT

Information on patent family members

International application No
PCT/NL2009/050356

Patent document cited in search report	Publication date	Patent family member(s)	Publication date
WO 2008157435 A	24-12-2008	US 2009131995 A1	21-05-2009
US 2004176673 A1	09-09-2004	NONE	
EP 1825880 A	29-08-2007	NONE	
US 2008103545 A1	01-05-2008	AU 2007313319 A1	24-04-2008
		CA 2666529 A1	24-04-2008
		US 2008103407 A1	01-05-2008
		WO 2008048471 A2	24-04-2008
US 2003100930 A1	29-05-2003	US 2009036946 A1	05-02-2009
		US 2005049648 A1	03-03-2005
US 5957956 A	28-09-1999	NONE	
US 2006206162 A1	14-09-2006	EP 1861162 A1	05-12-2007
		WO 2006098824 A1	21-09-2006

Form PCT/ISA/210 (patent family annex) (April 2005)

Espacenet

Bibliographic data: JP2009538641 (A) — 2009-11-12

APPARATUS, METHODS AND SYSTEMS FOR TOXIN DELIVERY TO THE NASAL CAVITY

Inventor(s):

Applicant(s):

Classification: **- international:** ***A61F2/958; A61M35/00;*** *A61K38/00; A61K9/06; A61K9/08; A61K9/10; A61K9/19; A61N1/30*

- cooperative: **A61K38/4886 (EP, US); A61K38/4893 (EP, US); A61K9/0043 (US); A61M25/10 (EP, US); A61M29/00 (US); A61M29/02 (US); A61M31/00 (EP, US); A61N1/05 (EP, US); A61N1/0546 (EP, US); A61N1/327 (EP, US);** A61B18/1492 (EP, US); A61B18/18 (EP, US); A61B2017/00765 (EP, US); A61M2025/0008 (EP, US); A61M2025/0057 (EP, US); A61M2025/0096 (EP, US); A61M2025/105 (EP, US); A61M2210/0618 (EP, US); A61M25/007 (EP, US); A61M25/0084 (EP, US); A61N1/0568 (EP, US); A61N7/00 (EP, US); A61N7/022 (EP, US); C12Y304/24069 (EP, US)

Application number: JP20090511262 20070521 Global Dossier

Priority number(s): US20060747771P 20060519 ; US20070750967 20070518 ; US20070750963 20070518 ; WO2007US69391 20070521

Also published as: EP2021022 (A2) EP2021022 (A4) EP2021022 (B1) EP3248612 (A1) JP5183627 (B2) more

Abstract not available for JP2009538641 (A)
Abstract of corresponding document: WO2007137235 (A2)

Apparatus, methods and systems for delivering toxin and toxin fragments to a patient's nasal cavity provide for both release of the toxin and delivery of energy which selectively porates target cells to enhance uptake of the toxin. The use of energy-mediated delivery is particularly advantageous with light chain fragment toxins which lack cell binding capacity.

Aerin Exhibit 1011, Page 218 of 2183
Aerin Medical Inc. v. Neurent Medical Ltd.
IPR2025-01126

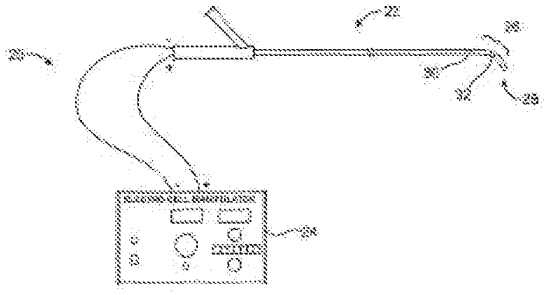

Aerin Exhibit 1011, Page 219 of 2183
Aerin Medical Inc. v. Neurent Medical Ltd.
IPR2025-01126

Espacenet

Description: JP2009538641 (A) — 2009-11-12

APPARATUS, METHODS AND SYSTEMS FOR TOXIN DELIVERY TO THE NASAL CAVITY

Description not available for JP2009538641 (A)
Description of corresponding document: WO2007137235 (A2)

A high quality text as facsimile in your desired language may be available amongst the following family members:

EP3248612 (A1) US2007267011 (A1) WO2007137235 (A2) US2008021369 (A1) US2010087775 (A1) US2012089078 (A1) US2014114233 (A1) US2015367115 (A1)

The EPO does not accept any responsibility for the accuracy of data and information originating from other authorities than the EPO; in particular, the EPO does not guarantee that they are complete, up-to-date or fit for specific purposes.

APPARATUS, METHODS AND SYSTEMS FOR TOXIN DELIVERY

TO THE NASAL CAVITY

BACKGROUND OF THE INVENTION [0001] 1 . Field of the Invention. The present invention relates generally to medical methods and systems. More particularly, the present invention relates to methods and systems for delivering toxins, such as botulinum toxin light chain fragments, to target cells in a nasal cavity.

Rhinitis, which includes the symptoms of rhinorrhea, is a condition resulting from inflammation and swelling of the patient's mucus membranes which line the nasal cavity. Rhinitis and/or rhinorrea can arise from a number of conditions, most often results from allergies to pollen, dust, seasonal allergens or other airborne substances, but can also be caused by anatomic pathologies such as blockages (as in the case of sinusitis). Symptoms may include sneezing, itching, nasal congestion, and a runny nose.

While numerous treatments for rhinitis have been proposed over the years, no single treatment is optimum for all patients or all conditions. Most commonly, hay fever and other forms of rhinitis are treated with antihistamines which block the inflammatory response. While effective, many antihistamines can cause drowsiness, have a limited duration of effect, and present the patient with an on-going cost to continuously purchase the drugs.

Aerin Exhibit 1011, Page 220 of 2183
Aerin Medical Inc. v. Neurent Medical Ltd.
IPR2025-01126

Recently, a longer term therapy for rhinitis which relies on the use of botulinum toxin ("BoNT<">) for blocking mucus production by mucus-producing cells in the nasal membrane has been proposed. Botulinum and other neurotoxins are capable of disabling adrenergic cells, including epithelial or goblet cells which are responsible for the majority of mucus production in the nasal cavity membrane. Dr. Ira Sanders has demonstrated that introduction of intact botulinum toxin molecules into the nasal passages of canines can reduce mucus secretion by a significant amount.

While the experimental work of Dr. Sanders holds promise for long term rhinitis treatment, it faces a number of challenges before it is suitable for wide spread use in humans. In particular, botulinum toxin is a neurotoxin which could have significant negative effects on a patient if accidentally released outside of the targeted nasal passages. Inadvertent distribution of the toxin to muscles of the oropharynx, mouth, tongue, or elsewhere could result in serious complications to the patient. Additionally, the use of botulinum-soaked gauze pads for delivering the toxin to the nasal cavities, as demonstrated by Dr. Sanders, will have limited ability to uniformly and selectively deliver the botulinum to the regions having high concentrations of preferred target cells, such as epithelial or goblet cells in the nasopharynx.

0006] For these reasons, it would be desirable to provide improved methods and systems for delivering toxins, such as botulinum and active botulinum fragments, to the nasal membrane of a patient, particularly a patient suffering from rhinitis or other conditions associated with nasal inflammation and conditions, such as sinus headaches and migraine headaches. The methods and systems should be capable of providing for selective and repeatable delivery of the toxins to defined target areas within the nasal cavities, including particular paranasal sinuses, the nasopharynx, and in some cases substantially the entire nasal cavity. The systems and methods should provide for the safe and effective delivery of the toxins, and in particular should reduce or eliminate the risk of toxin being delivered to non-targeted tissues outside of the nasal cavity. At least some of these objectives will be met by the inventions described herein below.

2. Description of the Background Art. U.S. Patent No. 5,766,605, to Sanders et al. has been described above. Sham et al. (1995) Otol[omega]yngol. Head Neck Surg. 1 12: 566-571 also reports the work of Dr. Sanders described in the '605 patent. Unal et al. (2002) Acta Otolaiyngol 123: 1060-1063 describes the injection of botulinum toxin A into the turbinates of patients suffering from allergic rhinitis. See also, U.S. 6,974,578. The purification and possible therapeutic uses of botulinum light chain are described in US2004/0151741 ,

US2005/0019346, and Chaddock et al. (2002) Protein Expression and Purification 25: 219- 228. Energy-mediated transdermal delivery of intact botulinum toxin is suggested in US2005/007441 and 2004/0009180. The use of catheters and other devices for the energy- mediated delivery of botulinum light chain is described in commonly owned co-pending provisional application 60/702,077 (Attorney Docket No. 020979-003400US, filed July 22, 2005, the full disclosure of which has previously been incorporated herein by reference.

BRIEF SUMMARY OF THE INVENTION

Briefly and in general terms, the present invention provides methods and systems for

Aerin Exhibit 1011, Page 221 of 2183
Aerin Medical Inc. v. Neurent Medical Ltd.
IPR2025-01126

toxin delivery to the nasal cavity. The invention provides for the delivery of toxin to and across the nasal membrane tissue to treat various conditions and symptoms associated with nasal inflammation, including, rhinorrhea, rhinitis, sinusitis and hay fever. 0009 Rhino[pi]hea is the term describing the effluence of mucus from the lining of the nasal passages, nasopharynx, or paranasal sinuses. Rhinonhea can be a symptom of a number of diseases such as the common cold, sinusitis or rhinitis. Rhinitis (inflammation of the airways) falls into two major categories - allergic and non-allergic (or vasomotor) rhinitis. Each can have several subcategories. Sinusitis is an infection or inflammation of the paranasal sinuses. Sinusitis may have a number of different causes, and can be the result of chronic inflammation of the nasal passages, for example as a result of chronic rhinitis.

Allergic rhinitis is an immunologic response modulated by IgE and characterized predominantly by sneezing, rhinorrhea, nasal congestion, and pruritus of the nose. It may be seasonal (a condition commonly referred to as hay fever) or perennial. The seasonal form is caused by allergens released during tree, grass, or weed pollination, whereas the perennial form is caused by allergies to animal dander, dust mites, or mold spores with or without associated pollinosis. Data also suggest that urban air pollutants from automobiles and other sources may have an adjunctive effect, (from attached articles by Nathan et al)

[0011] Nonallergic rhinitis is a diagnosis of rhinitis without any immunoglobulin E (IgE) mediation, as documented by allergen skin testing. Hence, the rhinorrhea, sneezing, pruritus, and congestion do not result from allergy or hypersensitivity and continue to persist, whether continuously or sporadically. Nonallergic rhinitis affects 5-10% of the population. Nonallergic rhinitis has 7 basic subclassif[iota]cations, including infectious rhinitis, nonallergic rhinitis with eosinophilia syndrome (NARES), occupational rhinitis, hormonal rhinitis, drug-induced rhinitis, gustatory rhinitis, and vasomotor rhinitis. Patients may or may not present with the same symptoms seen in allergic rhinitis.

According to embodiments of the present invention, a toxin, such as botulinum toxin, is administered to the tissue of the nasal cavity using an apparatus comprising a handle and at least one applicator tip configured for insertion into a patient's nostril and placement within the patient's nasal passageway to facilitate deliver of the toxin via the applicator.

0013] In one aspect of the present invention, the apparatus can be configured to facilitate contact between the applicator tips and the turbinates of the nasal wall and optimize toxin deliver to the nasal membrane. This can be achieved by incorporating a spring element into the handle of the apparatus, such as a v-shaped spring or closed-loop spring. The outward bias from this spring element can result in an expanded treatment configuration for delivering toxin to the nasal tissue. [0014] In another aspect of the present invention, the applicator tips can be configured with a low volume delivery configuration to facilitate placement of the apparatus within the nasal passageway and an expanded volume treatment configuration to facilitate contact with the nasal wall. A spring element can be used to expand the applicator tip. Additionally, an actuator and engagement member can be used to transition the spring-loaded applicator tip from a compressed state to an expanded state.

0015) In another aspect of the present invention, the toxin is loaded onto the applicator tips prior to insertion into the nasal passageway by, for example, dipping the applicator tips in a solution of toxin, coating the applicator tips with a lyophilized compound of

Aerin Exhibit 1011, Page 222 of 2183
Aerin Medical Inc. v. Neurent Medical Ltd.
IPR2025-01126

toxin, incorporating the toxin into a bioresorbable coating on the applicator or configuring the applicator with a muco-adhesive pad that carries toxin.

In another aspect of the present invention, the apparatus further comprises an infusion channel and access port connected to a toxin source so that toxin can be infused into the applicator tips either prior to or following placement in the nasal passageway. Alternatively, a liquid such as saline can be infused to the applicator tips to reconstituted lyophilized toxin that was preloaded on the applicator tips.

In another aspect of the present invention, a toxin fragment, such as light chain botulinum toxin, can be administered to the nasal tissue and energy can be delivered to the tissue to cause poration in the cells of the nasal membrane and enhance delivery of the toxin to the tissue.

In another aspect of the present invention, the applicator is configured to deliver predetermined quantity in a controlled fashion. The applicator comprises a inner member for transitioning the applicator form a low volume configuration to an expanded volume configuration and an outer member for carrying the predetermined quantity of toxin and delivering the toxin to the nasal wall. The expansion of the inner member can also facilitate the controlled delivery of toxin to the nasal wall. The applicator may further comprise an impermeable lining separating the inner member and outer member and preventing toxin from dispersing to and through the inner member.

The present invention provides treatments for any disease or condition for which rhinorrhea is a result or symptom. (0020] Rhinorrhea is the term describing the effluence of mucus from the lining of the nasal passages, nasopharynx, or paranasal sinuses. Rhinorrhea can be a symptom of a number of diseases such as the common cold, sinusitis or rhinitis, Rhinitis (inflammation of the airways) falls into two major categories - allergic and non-allergic (or vasomotor) rhinitis. Each can have several subcategories. Sinusitis is an infection or inflammation of the paranasal sinuses. Sinusitis may have a number of different causes, and can be the result of chronic inflammation of the nasal passages, for example as a result of chronic rhinitis.

[0021] Allergic rhinitis is an immunologic response modulated by IgE and characterized predominantly by sneezing, rhinorrhea, nasal congestion, and pruritus of the nose. It may be seasonal (a condition commonly referred to as hay fever) or perennial. The seasonal fo[pi]n is caused by allergens released during tree, grass, or weed pollination, whereas the perennial form is caused by allergies to animal dander, dust mites, or mold spores with or without associated pollinosis. Data also suggest that urban air pollutants from automobiles and other sources may have an adjunctive effect.

0022] Nonallergic rhinitis is a diagnosis of rhinitis without any immunoglobulin E (IgE) mediation, as documented by allergen skin testing. Hence, the rhinorrhea, sneezing, pruritus, and congestion do not result from allergy or hypersensitivity and continue to persist, whether continuously or sporadically. Nonallergic rhinitis affects 5-10% of the population. Nonallergic rhinitis has 7 basic subclassifications, including infectious rhinitis, nonallergic rhinitis with eosinophilia syndrome (NARES), occupational rhinitis, hormonal rhinitis, drug-induced rhinitis, gustatory rhinitis, and vasomotor rhinitis. Patients may or may not present with the same symptoms seen in allergic rhinitis.

According to the present invention, botulinum toxin, ricin, exotoxin A, diphtheria toxin, cholera toxin, tetanus toxin, other neurotoxins, and active fragments thereof are

Aerin Exhibit 1011, Page 223 of 2183
Aerin Medical Inc. v. Neurent Medical Ltd.
IPR2025-01126

delivered to a patient's nasal membrane while applying energy to target cells within the membrane under conditions which cause a reversible (or in some instances non-reversible) poration of the cell membranes to enhance delivery of the toxin into the cells. The region where the toxin is introduced may comprise any portion of the nasal cavity, such as a single paranasal sinus or portion thereof, a main nasal passage, two or more paranasal sinuses, or in some cases may comprise substantially the entire nasal cavity of the patient. A particular target region for the toxin may comprise the nasopharynx which is at the back of the nasal passage. The nasopharynx comprises a cluster of epithelial or goblet cells which are responsible for mucus secretion and which are susceptible to the disabling mechanism of the botuhnum toxin and other neurotoxins

0024) The energy is piefci ably selectively applied to a taigcted region containing a va [pi]ety of cell types, including goblet cells, epithelial cells, ciliated and non-ciliated columnar cells, basal cells, and less or no eneigy applied to untargeted iegions It will be appi eciated that the energy may be applied to regions of the nasal membrane which aie the same or different from the i egions to which the toxin has been introduced By controlling the delivery ai ea of both the toxin delivery and the energy delivery, the methods and apparatus of the present invention can more specifically target the epithelial or goblet and other recipient cells of interest while minimi7ing the amount of toxin which enters non-targeted cells That is, only those cells in the nasal membrane which are exposed to both the toxin and the applied energy will prefeientially be permeabhzed or porated to receive the toxin within the cytoplasm of the cell

The toxin to be delivered may comprise any neurotoxin capable of disabling mucus secretion in epithelial or goblet cells and other mucus-producing nasal cells Preferably, the toxin comprises botulinum toxin, although othei toxins such as [pi]cin, exotoxin A, diphtheria toxin, cholera toxin, tetanus toxin, other neurotoxins, and active fragments thereof may also find use In preferred aspects of the present invention, only an active fragment of the toxin will be delivered to the nasal cavity Botuhnum toxin and the other toxins listed above commonly comprise both a heavy chain and a light chain The heavy chain is responsible for binding to the target cells and mediating passage of the light chain into the cytoplasm of the target cells By delivering only the light oi active chain of these toxins (after removal of the heavy chain or recombinant production of only the light chain), the risk of accidental dehveiy of the toxin to non-target cells is greatly reduced Delivery of the active or light chain fragments into the target cells, according to the present invention, is mediated and enhanced by the selective application of an energy which porates the cell membrane to allow entry of the light chain or active fragment The presently preferred botuhnum light chain fragment may be de[pi]ved from any one of the seven presently known botuhnum types A-G

Any type of energy which is capable of reversibly permeabhzmg or porating the cell wall to allow passage of the toxm molecule, either whole toxin or preferably light chain fragment, into the cell cytoplasm may be applied to the cell membrane Thus, energy may comprise various forms of electrical pulses, acoustic pulses, X-ray energy, microwave energy, or the like, and combinations thereof Preferably, the energy will be either pulsed elect[pi]cal energy of the type which is commonly used for cellular electroporation or will be ultrasonic energy of the type commonly employed for sonoporation of cells. The energy may be applied using the same catheters or other structures which are used for delivering the toxins. Alternatively, the energy may be applied using separate external or internal sources, such as using separate external ultrasonic transducers and/or ultrasound wave guides capable of delivering focused or

Aerin Exhibit 1011, Page 224 of 2183
Aerin Medical Inc. v. Neurent Medical Ltd.
IPR2025-01126

unfocused ultrasound into the target tissues of the nasal cavity.

0027j In specific embodiments of the methods of the present invention, the toxin may be introduced to the target region through a catheter. For example, the catheter may carry a balloon which engages the nasal membrane in order to effect delivery of the toxin to the target cells. In a particular example, the balloon is porous over at least a portion of its area so that the toxin may be released to specific areas of the nasal membrane, typically being incorporated into a suitable liquid, gel, or other fluid or fluidizable carrier. In other embodiments, the toxin may be introduced through one or more needles carried on the catheter, and in still other embodiments the toxin may be aerosolized from a small port, nozzle, or other orifice or structure on the catheter.

While the energy may be applied from a separate external source, as generally described above, the energy will most often be applied from the same catheter or other apparatus used to deliver the toxin. For example, when ultrasonic or other acoustic energy is being applied, the transducer may be on or associated with the catheter. In a particular example, it is shown that the transducer may be located within or beneath the porous balloon which is used to deliver toxin to the nasal membrane. When electrical energy is used for poration, the electrodes may be on the catheter within or surrounding the region which delivers the energy to the nasal membrane. In other instances, the energy may be applied from a separate catheter or other device adapted for intranasal introduction. In still other instances, the energy application will apply energy transcutaneously, for example from the skin of the face, typically surrounding the nose over the sinus cavities.

In addition to the methods described above, the present invention further provides systems for delivering toxins to epithelial or goblet and other target cells as defined above in a nasal membrane. The systems may typically comprise a catheter adapted to introduce a toxin to a region adjacent to the target cells. An energy applicator is further provided for applying energy to the target cells under conditions which cause a reversible poration of the cell membranes to enhance delivery of the toxin. Systems may still further comprise a source of the toxin suitable for introduction from or through the catheter. The energy applicator may be mounted on or incorporated within the catheter, or may be a separate or external source. In an exemplary embodiment, as illustrated in Figure 18, an external applicator may comprise a mask or other structure which fits over the nose and/or sinus region of the patient and which is capable of delivering acoustic or microwave energy to the target cells within the target regions.

When the energy applicator is incorporated with or within the catheter, the delivery pattern of the energy will usually be at least partially overlapping with the toxin delivery pattern of the catheter. For example, when a porous balloon is used for toxin delivery, the acoustic transducer, electroporation electrodes, or the like, will usually be disposed to deliver energy which at least partly overlaps with the dispersion pattern of the toxin. In some instances, the region of applied energy will be coextensive with the region of toxin dispersion. In other instances, the two regions will only partially overlap. In the latter case, the delivery of the toxin will be enabled or enhanced principally within the regions of overlap.

BRIEF DESCRIPTION OF THE DRAWINGS [0031] Figure 1 - depicts a schematic of the creation of neurotoxin Botulinum Toxin Type A (BoNT/A), including the light chain (LC) fragment or portion.

Aerin Exhibit 1011, Page 225 of 2183
Aerin Medical Inc. v. Neurent Medical Ltd.
IPR2025-01126

Figure 2A - depicts a schematic of a target cell, including the cell membrane, and inner cellular matrices.

Figure 2B - depicts a schematic of the target cell wherein LC molecule has been introduced.

Figures 3A-3B - depicts a the target cell of Figure 2 showing application of an energy field (EF) to produce permeabilization or pores (P) in the cell membrane, and introduction of the LC fragment therethrough.

Figure 4 - depicts a schematic of a cell wherein the energy field has been discontinued, and neurotransmission of the cell has been effectively blocked.

Figures 5, 5A-5B - depicts various embodiments of a delivery device of the present invention utilizing multiple energy transmission elements and an energy transmission system.

Figures 6A-6D, 6AA and 6CC - depict various electrode catheter configurations adapted to deliver energy or energy and therapeutic agents to target tissue. 0038] Figure 7 - depicts an embodiment of the present invention utilizing an ultrasound element on a catheter device.

0039] Figure 8 - depicts an embodiment of the present invention utilizing an aerosolizing element.

Figure 9 - depicts use on an external hand held transducer for enhancing cellular uptake of toxin delivered from a separate nasal aerosolizer.

0041] Figures 10 and 1 1 - depicts depict use of balloon catheters for delivering toxin to the nasopharynx.

Figures 12A-12C - depict use of a self-expanding toxin delivery structure on a catheter.

Figures 13 and 14 - depict a protocol for limiting toxin introduction by partial filling of a porous delivery balloon.

Figure 15 - depicts sizing of a delivery balloon to control distribution of toxin released into the nasal cavity.

Figure 16 - depicts placement of a delivery balloon to protect the olfactory bulb.

Figure 17 - depicts the use of multiple small balloons for selective toxin delivery into the nasal cavity.

Figure 18 - depicts sonoporation using an external mask placed over the sinuses and nose.

Figure 19 - depicts a front view of an external sonoporation mask showing placement of ultrasound transducers.

Figures 20 and 21 - depict an orally-introduced occlusion catheter and energy applicator system.

Aerin Exhibit 1011, Page 226 of 2183
Aerin Medical Inc. v. Neurent Medical Ltd.
IPR2025-01126

Figures 22 and 23 - depict nose plugs for occluding and optionally delivery poration energy to the nasal cavity.

Figures 24 and 25 - depict an alternate occlusion catheter system for targeted toxin delivery to the nasopharynx. 0052) Figures 26 and 27 - depict use of a toxin delivery catheter having side holes and a distal occlusion balloon for isolating and protecting the olefactory bulb.

[00531 Figures 28 and 30- depict use of a simple catheter having a shaped distal end for aerosolizing a toxin into a target nasal sinus though an ostium open to the sinus.

Figure 29 - depicts toxin delivery using a nasal spray and energy delivery using a face mask.

[0055) Figures 31 and 32, depict use of a catheter having a shaped distal end for positioning separate infusion structures with a target sinus cavity.

Figure 33 - depicts an applicator device for delivering toxin to the nasal cavity having a handle and two applicator tips for placement within the nasal passageway.

0057] Figure 34 - depicts a top view of the applicator device illustrated in Figure 33.

Figure 35 - depicts the applicator device illustrated in Figure 33 when placed within the nasal passageway.

Figure 36 - depicts an applicator device configured with an infusion channel and access port for infusing solution to the applicator tip.

Figures 37A-37C - depict the handle of an applicator device in an isometric view, a top view in an expanded state and a top view in a compressed state, respectively.

Figure 38 - depicts an applicator device comprising a spring element.

Figures 39A-39B - depict a sponge applicator tip for an applicator device in a dry low volume configuration and a wet expanded configuration, respectively.

Figures 40A-40B - depict an applicator tip comprising a spring element in an expanded configuration and a compressed configuration, respectively.

Figure 41 - depicts an applicator device comprising loop spring element.

Figure 42 - depicts a spring-loaded applicator tip held in a compressed state by an engaged actuator.

Figure 43 - depicts an applicator device with the actuators of both applicator tips engaged by an engagement element. DETAILED DESCRIPTION OF THE INVENTION

0067 The present invention is directed to methods and systems for delivering toxins to target cells within a patient's nasal cavity. The toxins may be intact toxins, such as botulinum toxin, ricin, exotoxin A, diphtheria toxin, cholera toxin, tetanus toxin, other neurotoxins, and active fragments thereof. Each of these toxins comprises a heavy

Aerin Exhibit 1011, Page 227 of 2183
Aerin Medical Inc. v. Neurent Medical Ltd.
IPR2025-01126

chain responsible for cell binding and a light chain having enzyme activity responsible for cell toxicity.

Botulinum toxin blocks acetylcholine release from cells, such as the epithelial or goblet cells in the nasal membranes responsible for mucus hypersecretion, and can thus be effective even without energy-mediated delivery in accordance with the principles of the present invention. The use of energy to permeablize or porate the cell membranes of the epithelial or goblet cells or other mucus-secreting cells of the nasal lining, in accordance with the present invention, allows botulinum and other toxins to be preferentially delivered to the targeted epithelial or goblet and other mucus-producing cells. Additionally, it allows use of the active or light chains of these toxins (having the heavy chains removed or inactivated) for treatments in accordance with the present invention. Normally, the light chains when separated from the cell-binding heavy chains of botulinum and the other toxins are incapable of entering the cells and thus will be free from significant cell toxicity. By using the energy-mediated protocols of the present invention, the toxin light chains may be locally and specifically introduced into the target cells located within defined regions of the nasal membrane. Thus, even if the toxin fragments are accidentally dispersed beyond the desired target regions, the fragments will not generally enter cells without the additional application of cell permeablizing or porating energy. For that reason, the toxin delivery methods of the present invention are particularly safe when performed with toxin fragments, such as the light chain of botulinum and other toxins.

While the remaining portion of this disclosure will be presented with specific reference to the botulinum toxin light chain, it will be appreciated that the energy-mediated delivery protocols and systems may also be used with other intact toxins and in particular with other light chain toxin fragments as just discussed.

Generally, the botulinum toxin molecule (BoNT) is synthesized as a single polypeptide chain of 15OkD molecular weight. The neurotoxin is then exposed to enzymes, either during cultivation of the Clostridium botulinum organism or subsequent to purification of the toxin, wherein specific peptide bonds are cleaved or "nicked" resulting in the formation of a dichain molecule referred to as BoNT. As shown in Figure 1 , dichain neurotoxin is composed of a light chain region 5OkD molecular weight linked by disulfide bonds to a heavy chain 10OkD molecular weight (Kistner, A., Habermann, E. (1992) Nalinvn Schmiedebergs Arch. Pharmacol. 345, 227-334). When the light chain is separated from the heavy chains of botulinum toxin, neither chain is capable of blocking neurotransmitter release, however, the light chain alone is capable of blocking acetylcholine release if transported directly into the cell cytosol. (Ahnert-Hilger, G., Bader, M. F., Bhakdi, S., Gratzl, M. (1989) J. Neurochem. 52, 1751 -1758 and Simpson, L.L. (1981) Pharmacol. Rev. 33, 155-188.) Focusing on the light chain, the isolation or separation process essentially renders the light chain "non-toxic<"> in a general environment, while still maintaining its effect or toxicity, once it is transported through the target cell membrane.

Over the past several years, the separation and purification of the light chain and heavy chain of BoNT has seen significant development activity. In the case of the heavy chain (HC), researchers are interested in its ability to bond with a target cell and deliver certain molecules into that cell. For example, various drug delivery applications have been suggested, for example, using the HC to bind to tPA so that a patient could inhale the HC-bound tPA allowing it to cross the membrane of the lungs and be transported into the bloodstream for anticoagulation. Of particular interest to the present invention

Aerin Exhibit 1011, Page 228 of 2183
Aerin Medical Inc. v. Neurent Medical Ltd.
IPR2025-01126

are the efforts to isolate and purify the light chain (LC) of the botulinum molecule. In its isolated and purified form, all HC elements are removed, rendering the LC incapable of crossing the cell membrane without assistance. This renders the LC a non-toxic protein to the cell environment, while still maintaining its encoded toxicity by, once it is effectively delivered to its appropriate catalytic environment; the cell cytosol.

Various groups have been active in the area of isolation and purification. For example, companies such as Metabiologics, a group affiliated with the University of

Wisconsin, the Center for Applied Microbiology and Research (CAMR), a division of the UK Health Protection Agency, List Biological Laboratories, Inc. of California, and other research groups throughout the world. Many of these companies provide purified preparations of botulinum neurotoxins from Clostridium botulinum types A and B. List Laboratories in particular provides recombinantly produced light chains from both types A, B, C, D and E.

For purposes of this specification, the terms "poration" and/or "permeablization" include various forms of electrically-medicated poration, such as the use of pulsed electric fields (PEFs), nanosecond pulsed electric fields (nsPEFs). ionophoi eseis, electrophoresis, electropermeabilization, as well as othei enei gy mediated permeabili/ation, including sonoporation (mediated by ulti asonic or other acoustic eneigy), and/or combinations theieof, to create temporai y pores in a taigeted cell membrane Similarly, the term "elcctiode<"> or ""energy source <"> used herein, encompasses the use of va[pi]ous types ol energy producing devices, including x-ray, I adiofrequency (RF), DC current, AC cu[pi]ent, miciowave, ultrasound, adapted and applied in ranges to produce membiane peimeabilization in the targeted cell

Reversible electroporation, first observed in the early 1970<'>s, has been used extensively in medicine and biology to transfei chemicals, drugs, genes and other molecules into targeted cells for a variety ol purposes such as electrochemotherapy, gene transfei , transdermal drug dehveiy, vaccines, and the like

In genei al, electropoi ation may be achieved utilizing a device adapted to activate an electrode set or se[pi]es of electrodes to produce an electric field Such a field can be generated in a bipolai or monopolar electrode configuration When applied to cells, depending on the duration and strength of the applied pulses, this field operates to increase the permeabihzation of the cell membrane and reversibly open the cell membiane for a short pe[pi]od of time by causing pores to form in the cell lipid bilayer allowing entry of va[pi]ous therapeutic elements or molecules, after which, when energy application ceases the pores spontaneously close without killing the cell after a certain time delay As characte[pi]zed by Weaver, Elect/ oporatwn A General Phenomenon for Manipulating Cells and Tissues Journal of Cellular Biochemistry, 51 426-435 (1993), short(i -I [theta][theta][mu]s) and longer (1 - 10 ms) pulses have induced electroporation in a variety of cell types In a single cell model, most cells will exhibit electroporation in the range of 1 -1 5 V applied across the cell (membrane potential)

In addition, it is known in the art that maci omolecules can be made to cross revei sibly created pores at voltages of 120V or less applied to cells for durations of 20 microseconds to many milliseconds For applications of electroporation to cell volumes, ranges of 10 V/cm to 10,000 V/cm and pulse durations ranging from 1 nanosecond to 0 1 seconds can be applied In one example, a relatively narrow ([mu]sec) high voltage (200V)pulse can be followed by a longer (>msec) lower voltage pulse (<100V) The first

Aerin Exhibit 1011, Page 229 of 2183
Aerin Medical Inc. v. Neurent Medical Ltd.
IPR2025-01126

pulse or pulses open the pores and the second pulse or series of pulses assist in the movement of the BoNT-LC across the cell membrane and mto the cell 0077 Certain factors affect how a delivered electric field will affect a targeted cell, including cell size, cell shape, cell orientation with respect to the applied electric field, cell temperature, distance between cells (cell-cell separation), cell type, tissue heterogeneity, properties of the cellular membrane and the like.

Various waveforms or shapes of pulses may be applied to achieve electroporation, including sinusoidal AC pulses, DC pulses, square wave pulses, exponentially decaying waveforms or other pulse shapes such as combined AC/DC pulses, or DC shifted RF signals such as those described by Chang in Cell Poration and Cell Fusion using an Oscillating Electric Field, Biophysical Journal October 1989, Volume 56 pgs 641 -652, depending on the pulse generator used or the effect desired. The parameters of applied energy may be varied, including all or some of the following: waveform shape, amplitude, pulse duration, interval between pulses, number of pulses, combination of waveforms and the like.

There are at least two general power categories of medical ultrasound waves. One category of medical ultrasound wave is high acoustic pressure ultrasound. Another category of medical ultrasound wave is low acoustic pressure ultrasound.

Acoustic power is expressed in a variety of ways by those skilled in the art. One method of estimating the acoustic power of an acoustic wave on tissue is the Mechanical Index. The Mechanical Index (MI) is a standard measure of the acoustic output in an ultrasound system.

High acoustic pressure ultrasound systems generally have a MI greater than 10. Low acoustic pressure systems generally have a MI lower than 5. For example, diagnostic ultrasound systems are limited by law to a Mechanical Index not to exceed 1.9.

Another measurement used by those skilled in the art is the spatial peak, peak average intensity (Isppa). The intensity of an ultrasound beam is greater at the center of its cross section than at the periphery. Similarly, the intensity varies over a given pulse of ultrasound energy. Isppa is measured at the location where intensity is maximum averaged over the pulse duration. Isppa for high acoustic pressure or high intensity focused ultrasound (HIFU) applications ranges from approximately 1500W/cm2. to 9000 W/cm2. Diagnostic ultrasound equipment, for instance, will generally have, and an Isppa less than 700 W/cm2.

Yet another way in which ultrasound waves can be characterized is by the amplitude of their peak negative pressure. High acoustic pressure or HIFU applications employ waves with peak amplitudes in excess of I OMPa. Low acoustic pressure ultrasound will generally have peak negative pressures in the range of 0.01 to 5.0 MPa . Diagnostic ultrasound equipment, for example, will generally have a peak amplitude less than 3.0MPa.

0084J Both high and low acoustic pressure ultrasound systems generally operate within the frequency range of 20KHz - 10.0 MHz Interventional applications (such as in blood vessels) operate clinically up to about 50 MHz. Also ophthalmologic applications up to about 15 MHz. Diagnostic imaging typically uses frequencies of about 3 to about 10 MHz. Physical therapy ultrasound systems generally operate at frequencies of either 1.0MHz or 3.3MHz.

Aerin Exhibit 1011, Page 230 of 2183
Aerin Medical Inc. v. Neurent Medical Ltd.
IPR2025-01126

High acoustic pressure ultrasound or high intensity focused ultrasound has been used for tissue disruption, for example for direct tumor destruction. High intensity focused ultrasound using high acoustic pressure ultrasound is most commonly focused at a point in order to concentrate the energy from the generated acoustic waves in a relatively small focus of tissue.

Systems for permeabilization of target tissue cell membranes may employ either high acoustic pressure or low acoustic pressure ultrasound. Some embodiments may preferably employ relatively low acoustic pressure, for example the systems described herein where the transducers are mounted on the delivery devices and operate inside the body. Other systems may operate at interim acoustic pressure ranges. For example, systems described herein which employ an external ultrasound generator and transducer and which conduct the ultrasound to the target tissues through the use of a wave guide. In these systems, losses due to transduction through the wave guide can be compensated for by increasing the input power to the wave guide until adequate power is delivered to the target tissue. Finally, some systems described herein may employ focused or partially focused higher pressure ultrasound, for example the systems which employ an external mask to conduct the ultrasonic power through the tissues to the target tissues. It should be appreciated that combinations of high and low acoustic pressure systems may also be employed.

It should also be appreciated that any embodiment employing ultrasonic energy and ultrasound transducers can alternatively be configured as a microwave energy system using microwave antennas. For example, the embodiments disclosed herein relating to delivering energy from an external mask equipped with ultrasound transducers can also be configured to deliver microwave energy using one or more microwave antennas. [0088J A schematic example of the methods of the present invention are shown in Figures 2A, 2B, 3A, 3B and 4 in a simplified single cell model. A targeted cell, e.g.. an epithelial or goblet cell of the type which line the nasal cavity membrane, is shown in Figure 2A. Fragmented neurotoxin such as BoNT-LC (LC)is introduced into the vicinity of the targeted cell as depicted in Figure 2B. An energy field (EF) is applied in accordance with the present invention resulting in the transfer of the BoNT-LC to the intracellular matrix (cytosol or cytoplasm) as shown in Figures 3A and 3B. Once this transfer has occurred, the release of acetylcholine from the presynaptic neurons at the neuromuscular junctions of the epithelial or goblet or other target cells is then blocked or disrupted. Once energy application is discontinued, the pores in the cell membrane recover or close as depicted in Figure 4.

The terms "poration" and "permeablization" will also cover forms of cellular sonoporation. Just as pulses of high voltage electricity can open transient pores in the cell membrane, ultrasonic energy can do the same. See for example Guzman et al. "Equilibrium Loading of Cells with Macromolecules by Ultrasound: Effects of Molecular Sizing and Acoustic Energy<">, Journal of Pharmaceutical Sciences, 91 :7, 1693-1701 , which examines the viability of ultrasound to deliver molecules of a variety of sizes into target cells. In addition, techniques for nebulizing fluids and aqueous drugs are well known in the art, and as such, devices of the present invention may be adapted to introduce a BoNT-LC solution to a target region, such as the nasal passages and then effect selective membrane transport of the BoNT- LC into the cell using sonoporation.

To achieve the goals of the present invention, it may be desirable to employ methods

Aerin Exhibit 1011, Page 231 of 2183
Aerin Medical Inc. v. Neurent Medical Ltd.
IPR2025-01126

and apparatus for achieving cell membrane permeabilization via the application of an energy source, either from a catheter located directly in the vicinity of the targeted cells, or an externally focused energy system. For purposes of this specification, the term "catheter<"> may be used to refer to an elongate element, hollow or solid, flexible or rigid and capable of percutaneous introduction to a body (either by itself, or through a separately created incision or puncture), such as a sheath, a trocar, a needle, a lead. Further descriptions of certain electroporation catheters are described in United States Provisional Patent Application No. 60/701 ,747 (Attorney Docket No. 020979-003500US) and Non-provisional Patent Application No. 1 1/459,582 (Attorney Docket No. 020979-00351 OUS), the full disclosures of which are expressly incorporated herein by reference. [0091] Figures 5 and 5A-5B depict a system utilizing an electroporation catheter for selective electroporation of targeted cells. In certain configurations of the present invention, voltages may be applied via the electroporation catheter to induce reversible electroporation at the same time as the catheter delivers the fragmented neurotoxin to the targeted region.

0092 Referring to Figure 5, electroporation catheter system 20 comprises a pulse generator 24 such as those generators available from Cytopulse Sciences, Inc. (Columbia, MD) or the Gene Pulser Xcell (Bio-Rad, Inc.), or IGEA (Carpi, Italy), electrically connected to a catheter 22 having a proximal end and a distal region 26 adapted for minimally invasive insertion into the desired region of the body as described herein. The catheter further comprises an electroporation element 28 at the distal region thereof. The electroporation element consists for example of a first electrode 30 and a second electrode 32 operatively connected to the pulse generator for delivering the desired number, duration, amplitude and frequency of pulses to affect the targeted cells. These parameters can be modified either by the system or the user, depending on the location of the catheter within the body (intervening tissues or structures), and the timing and duration of reversible cell poration desired.

Figure 5 A depicts an arrangement of electrodes 30 and 32 that produces an electric field concentrated in a lateral direction from the catheter body whereas, Figure 5B shows a device with electrodes 30 and 32 configured to create a more uniform electric field about the shaft of the catheter body. Further catheter device and electrode configurations are shown in Figures 6A-6D. Figure 6A depicts an elongate catheter 40 having a first and second electrode (42 and 44) near the distal tip thereof, and including a monitoring or stimulation electrode 46 in the vicinity of the active porating electrodes for localizing the treatment area. In some embodiments, the monitoring or stimulating function may be performed by one or more of the treatment electrodes. The catheter device may have an optional sharp tip 48 to facilitate percutaneous introduction. Figure 6B is a similar catheter device, but is further adapted to be steerable, or articulate at a region 53 near the distal end of the device. Such steering ability enables the operator to introduce the device into tight or tortuous spaces (such as the bronchial passages, or cardiovascular vessels) so that optimal placement of electrodes 52, 54 and 56 of the device at the target location may be achieved.

Figure 6C depicts a further embodiment of the catheter device described above, that includes an injection element such as needle 62 to allow for the injection of a therapeutic agent such as a fragmented neurotoxin before, during or after the application of the pulsed energy or elcctroporation. The injection element may be a needle as shown in Figure 6C, an infusion port, or other infusion means. Electrodes 64, 66 and 68 are provided as discussed with respect to Figs. 6A and 6B.

Aerin Exhibit 1011, Page 232 of 2183
Aerin Medical Inc. v. Neurent Medical Ltd.
IPR2025-01126

Figure 6D depicts an alternative embodiment of the present invention, showing a catheter device 70 having electrode elements (72 and 74) that are adapted to extend laterally from the main catheter body, and in some cases, penetrate the surrounding tissue prior to application of energy. In doing so the depth and direction of the energy field created by the electroporative process, may be further controlled. A reference electrode 76 may also be provided.

Figure 7 depicts an embodiment of the present invention utilizing an ultrasonic element that may be particularly useful in delivery of the BoNT-LC to nasal tissue that provides a broad but targeted transport of the LC across the epithelial and goblet cell walls. In this device, ultrasound energy is delivered to the distal end 92 of the catheter device 90 via an ultrasonic waveguide that is operatively connected to an ultrasound energy source (U/SES) connected by cable 94. The LC fragment would be delivered from source 96 via the same lumen as the waveguide, or via a separate lumen that exits the distal tip of the device. In operation, the ultrasonic energy would cause the LC solution to be nebulized, forming mist clouds 98 within the lung, as shown in Figure 8. The mist itself, in the appropriate concentrations, may act as an ultrasound coupler, conveying the ultrasonic energy to the wall of the lung or other targeted cellular structures, causing sonoporation of the targeted cells whereby the LC fragment is transmitted across the cell membranes to become an effective neurotransmitter blocker. In an alternative embodiment, an ultrasonic transducer may be located directly at the tip of the delivery device, eliminating the need for a wave guide. Various catheters useful for delivering vibrational energy to tissue are described in United States Patent 6,361 ,554 and 6,464,680 to Brisken, the contents of which are expressly incorporated herein by reference in their entirety, for various therapeutic effects, such as enhancing cellular absorption of a substance.

Any of the catheter devices described herein, or described in the contemporaneously filed United States Provisional Patent Application No. 60/701 ,747 (Attorney Docket No. 020979-003500US) and Non-provisional Patent Application No. 1 1/459,582 (Attorney

Docket No. 020979-00351 OUS), previously incorporated by reference in their entirety, may be adapted to include an energy delivery element such as those described herein for purposes of providing a membrane tiansport system for delivery oi a toxin fragment of neurotoxin In addition, certain cathetei devices and methods such as those set forth in United States Patents 5,964,223 and 6,526,976 to Baran may be adapted to include energy transmission elements capable of pioducing a poiativc effect at the cellular level, including electrodes, ultiasonic elements and the like, foi treatment in the nasal passages

Furthermore, any of the foiegoing systems may include electrodes or other monitoring systems either located on the treatment catheter, oi external to the patient, to determine the degree of treatment to the region, including, thermocouple, ultrasound transducers, fiberoptics, sensing or stimulating electrodes Further, it may be desirable to incorporate multiple pairs of electrodes that may be activated in pairs, in groups, or in a sequential manner in order to maximize the desired shape of the energy field (EF) while minimizing the field strength requirements

[00991 It <1S> within the scope of the present invention to deliver the toxin, the energy, or both, non-invasively For example, as illustrated in Figure 9, the patient may draw the toxin into the nasal cavity from a hand-held dispersion device DD After a sufficient amount of the toxin has been infused into the nasal cavity, a separate hand-held

Aerin Exhibit 1011, Page 233 of 2183
Aerin Medical Inc. v. Neurent Medical Ltd.
IPR2025-01126

transducer TD connected to an approp[pi]ate power supply PS will be energized and applied to the nasal cavities by passing the tiansducei over the appropriate regions of the forehead and nose Optionally, the transducer can have a focused output so that the acoustic energy is focused in an approp[pi]ate depth beneath the skin surface Typically, from about 0 1 cm to 2 cm

While the toxins and porating energy of the present invention may be delivered to the nasal cavity in a variety of ways, the following provides a number of specific examples of catheters and other structures for delivering toxins to preselected portions of the nasal cavity For example, as shown in Figure 10, a balloon catheter 100 may be provided with a porous balloon 102 at its distal end The balloon would be porous over at least a portion of its body so that solution delivered to inflate the balloon, which would contain desired levels of the toxin or toxin fiagment, would release the solution through the balloon at a controlled rate By further providing one oi more ultrasonic transducers 104 within the balloon, optionally mounted on the cathetei body, ultrasonic poration energy can be delivered to the adjacent nasal membranes which are receiving the toxin solution As illustrated in Figure 10, the toxin is being delivered to a lower surface of the inferior meatus IM to localize and enhance cellular delivery at the balloon tissue interface Alternatively, the balloon could carry the toxin in a releasable form over its exterior surface in order to deliver to any adjacent tissue structure. In some instances, the toxin could be carried or encapsulated in delivery vesicles which are preferentially fractured by the same acoustic energy which permeablizes the cell wall. Other coatings include hydrogels, such as those produced by Surmodics, Inc., BioCoat, Inc., or the like. In some instances, it may be desirable to provide a coupling agent over and/or within the balloon in order to enhance the delivery of ultrasonic energy from the internal transducer. In still other instances, it would be possible to place polymeric transducers on or within the balloon surface in order to directly deliver ultrasonic or other acoustic energy into the adjacent tissues.

[0101 J In all the above cases, the ultrasonic transducers can be configured in order to selectively deliver the energy to desired portions of the adjacent tissues. For example, in the embodiment of Figure 10, the internal transducers 104 can be configured to focus the ultrasonic energy generally upwardly (as viewed in Figure 10) in order to preferentially deliver the toxins into the inferior meatus IM while minimizing delivery elsewhere.

As a further option, the balloon could be inflated by a coupling agent in order to enhance the transmission of the ultrasonic or other acoustic energy, while the toxin solution could be infused into the treatment area before or simultaneously using either a separate lumen in the catheter or a separate tube or other delivery catheter. In this way, it would not be necessary to inflate the balloon with a relatively large volume of the toxin solution.

The balloon catheters can be introduced by any conventional technique, for example, in some instances, it may be desirable to use a guidewire to place the catheter into a desired sinus or other location, optionally using fluoroscopic, MRI or ultrasound imaging.

Referring now to Figure 1 1 , a front view of particular balloons placed as generally shown in Figure 10, is shown in more detail. A single balloon 102 can be around the structures H in the inferior meatus. Alternatively, a pair of balloon structures 103 may be placed in the same space, as shown in the right hand portion of Figure 1 1.

Aerin Exhibit 1011, Page 234 of 2183
Aerin Medical Inc. v. Neurent Medical Ltd.
IPR2025-01126

Optionally, the balloons could be formed from an elastic material, such as a silicone, urethane, latex, thermoplastic elastomers, or other materials where the material is treated to be appropriately porous, for example by laser drilling. Alternatively, the balloons could be formed from non- distensible materials which are pre-formed to conform to the desired target cavities. The non- distensible balloons could also be laser drilled or otherwise made permeable in order to release the toxin solutions of the present invention. Alternatively, either type of balloon could be coated with the toxin solutions, coupling solutions, or other materials which are useful in the protocols of the present invention.

0105] Referring now to Figures 12A. 12B, and 12C, as an alternative to inflatable balloons, toxin delivery structures may be made to be various shapes, for example a generally '"flattened<"> balloons 102, whose profile is narrower in one axis than the other, for example by placement of an internal nitinol or other elastic frame or scaffold, or a stainless steel wire 103 that is fed into the balloon outer structure to form such shape, within a suitable porous cover or membrane. Thus, the structure 120 may be expanded by the scaffold 122 after release from a delivery tube 124. The structures can be used to deliver energy and/or toxin in any of the ways described previously with respect to balloons, including by carrying a transducer or electrode on or within the structure and delivering a toxin solution from the interior of the self-expanding structure through a porous portion of the structure wall.

In some instances, it will be desirable to protect the olfactory bulb of the sinuses from treatment with the toxin solutions of the present invention. Referring now to Figures 13 and 14, the porous portion of a delivery balloon 102 can be positioned so that the remaining non- porous segment is in contact with the olfactory bulb (Figure 13). Thus, when the balloon is inflated and the toxin solution delivered, it will not be directed at the tissues of the olfactory bulb (OB).

As shown in Figure 14, which is a cross-sectional view of Figure 13, instead of rendering the top portion of the delivery balloon non-porous, it would be possible to simply refrain from filling the top portion with the toxin solution and/or a coupling solution. This can be achieved by filling the balloon with a known volume of air 1 1 1 in addition to the toxin solution. With the patient positioned appropriately, the air will fill the portion of the balloon in proximity to the olfactory bulb, excluding this tissue from toxin contact. Additionally, the air bubble may act as an ultrasound insulator to inhibit energy delivery to the non-targeted or protected tissue. Thus, delivery of the toxin to the region around the olfactory bulb and/or delivery of the energy to the region around the olfactory bulb can be partially or wholly prevented.

Referring now to Figures 15 and 16, the balloon may be sized and positioned to target an area of high epithelial or goblet cell (G) concentration, for example in the back of the nasal passages in the area of the nasopharynx. By targeting this area of the nasal membrane, a high percentage of mucus-secreting epithelial or goblet cells can be treated with a device which is relatively small and which may can y a relatively low infusion volume and require less energy. Moreover, the olfactory bulb is inherently protected with this technique since the balloon is positioned well away from that area. If desired, of course, additional shielding, shaping or other protective balloons could be positioned between the olfactory bulb and the toxin and energy delivering components of the present invention.

As shown in Figure 17, direct infusion and treatment of particular sinuses may be

Aerin Exhibit 1011, Page 235 of 2183
Aerin Medical Inc. v. Neurent Medical Ltd.
IPR2025-01126

effected using relatively small occlusion balloons 102 which occlude and isolate natural openings into those sinuses. Once the balloon is in place and the occlusion balloon employed, the toxic solution can be delivered by infusion, dispersion, or other conventional techniques. Once the toxin solution is present in the sinus, all or a portion of the membrane of the sinus can then be treated with an external or other ultrasonic source.

0110] For example, as shown in Figures 18 and 19, the external transducer may comprise a mask which conforms to the nose and optionally over the sinuses, where the mask carries one or more ultrasonic or other acoustic transducers (TD) adapted to deliver energy transcutaneousl y into the sinuses. The mask may comprise a plurality of individual transducers (TD), which may be made from one, two, or several generally continuous piezoelectric films which are formed over or lamented within the mask. Alternatively, multiple individual piezoelectric crystal transducers can be built into the mask.

The effect of such externally applied ultrasonic energy can be enhanced by introducing microbubbles (free air) into the isolated sinuses and/or nasal passages which have been filled with toxin solution. For example, encapsulated microbubbles, which are generally useful as echocardiographic contrast agents, or specialty perfluorocarbons, are useful as such ultrasonic enhancing agents. By encapsulating the toxin molecules in spheres or bubbles, or by simply placing the spheres or bubbles in proximity to toxin molecules, the ultrasonic or other acoustic energy can be captured and stored until it is abruptly released with fracture of the sphere or bubble. Such microspheres will also act as resonance bodies as defined below.

Referring now to Figures 20 and 21 , a catheter 40 is placed at the posterior outlet of the nasal passages in the region of the nasopharynx. The catheters configured to occlude outflow from these sinuses and passages into the throat. As shown in Figure 20, a balloon catheter 102 or other occlusion device could be configured to block such passage. As shown in Figure 20, the catheter is delivered in through the mouth and guided into the posterior portion of the nasal cavities, typically using a guidewire. Once the nasopharynx of the posterior portion of the nasal cavity is occluded, toxin solution (BoNT)can be infused through the occluding catheter lumen, or through a separate infusion catheter or tube, in order to treat substantially the entire sinus and/or nasal cavity membrane at once (Figure 21). When the toxin solution is introduced through the catheter at the posterior region of the cavities, it will frequently be desirable to occlude the nostrils, for example using a nasal clip 105.

As shown in Figures 22 and 23, specially designed nose plugs 105 can be provided with air bleed valves 106 which are used to occlude the nostrils in order to evacuate or bleed air from the nasal passages while filling the passages with the toxin solution. The nose plugs 105 could optionally include ultrasonic transducers in order to deliver ultrasonic or other acoustic energy into the solutions entrapped within the nasal cavities using the nostril plugs. Alternatively, of course, the ultrasound or other acoustic energy could be delivered from an external transducer as described previously.

Referring now to Figures 24 and 25, an alternate occlusion catheter system for nasopharynx occlusion is illustrated. An occlusion catheter 40 is introduced through a nostril, where the tip includes an ultrasonic transducer to provide sonoporation. A nostril plug 105 is provided proximally on the shaft of the catheter, while the cavity is blocked with a separate occlusion balloon 102 introduced through the mouth and into

Aerin Exhibit 1011, Page 236 of 2183
Aerin Medical Inc. v. Neurent Medical Ltd.
IPR2025-01126

the posterior nasopharynx region. The toxin solution can be introduced into the cavity through either the catheters which pass through or reside in the nostrils or the catheter which occludes the posterior nasopharynx.

Figures 26 and 27 illustrate how a catheter 40 with side holes 108 can be configured to deliver toxin away from the olfactory bulb, even when used alone without separate nasopharynx occlusion catheters. The catheters preferably carry an occlusion balloon or other structure near their distal ends 107 to prevent or inhibit toxin from reaching the olefactory bulb

Use of these or other catheter devices can deliver toxin incorporated into vesicles which may be configured as "resonance" bodies, which reduce the need to fill the nasal cavities with a liquid or other form of toxin. For example, lipid microspheres which incorporate the toxin may be sprayed or aerosolized onto target surfaces of the nasal epithelium. After the lipid or other resonance bodies are attached to the targeted epithelium membrane surface(s), the ultrasound energy can be delivered from the catheter or externally through the skin in order to selectively porate the epithelial or goblet cells to enhance introduction of the toxin vis-[alpha]-vis resonance bodies. A protection device at the end of the shaft can be provided to shield the olfactory bulb from the toxin. [0117] Referring to Figure 29, the toxin may be delivered as a conventional nasal spray (BoNT), as mentioned hereinbefore, and the poration energy can be delivered through a face mask. The poration energy might alternatively be delivered as ultrasound energy delivered through a mist, without direct contact to the tissues. This mist might be the same mist which contains the toxin, or it might be a different, possibly denser mist delivered at some time after the toxin has been delivered. The delivery devices for these mists might be introduced a relatively short distance into the nose. Thus the entire therapy might comprise the specialized delivery of two mists.

Referring now to Figures 28 and 30, an infusion catheter 40 can be engaged against the ostium of a sinus cavity (Figure 28). A guidewire 1 10 may then be advanced through the infusion catheter and into the sinus cavity (Figure 30). The guidewire can be formed as a wave guide to deliver ultrasonic energy, as an electrode to deliver electroporation energy, or as an infusion wire to deliver the toxin solution itself. The wire could further be configured to perform two or more of these functions. The catheter could be configured to act as a counter electrode when the guidewire is acting as an electroporation electrode in bipolar energy delivery.

Referring now to Figure 31 , the catheter advanced to the os of a sinus cavity, as illustrated, can also be used to deliver a helical or randomly shaped delivery tube 1 12 which is deployed within the sinus. Preferably, the tube will expand to engage a major portion of the wall of the sinus cavity. Alternatively, the geometry could be selected to selectively engage only a particular portion of the wall of the sinus cavity. The wire can further be adapted to deliver energy, either electrical or acoustic, and/or may be configured to deliver and distribute the toxin solution within the cavity. In still other configurations, the wire could be coated to deliver the agent to the wall, and still further the wire could deliver ultrasound gels, saline, degassed water, or the like, to enhance coupling of a separate ultrasonic energy source.

Referring now to Figure 32, two or more deployment catheters can be used to advance any of the guidewires or other wire structures discussed above. As illustrated in Figure 32, an electrode basket 113 may be deployed through the delivery catheter.

Aerin Exhibit 1011, Page 237 of 2183
Aerin Medical Inc. v. Neurent Medical Ltd.
IPR2025-01126

Alternatively, a multiply tined catheter 1 14 structure may be delivered through the delivery catheter.

Figures 33 and 34 illustrate a device for applying BoNT to the treatment area within the nasal cavity. This device comprises a handle 1 15 having a proximal section, a body and a distal section. The body of the handle comprises a first member 1 16 and a second member 1 17. The first member and second member merge at the proximal section and terminate at the distal section, wherein the distal section comprises a first end and second end corresponding to the first member and second member. The device further comprises applicator tips 1 18 connected to each of the first end and second, wherein the applicator tips are configured for insertion into the nasal passageway, as shown in Figure 35.

Once within the nasal cavity, the applicator tips 1 17 and 1 18 can apply BoNT to the nasal passageway and, specifically, the turbinates along the nasal wall. The BoNT can be applied or affixed to the applicator tips as a liquid solution, gel, foam, cream, lotion and/or a lyophilized compound prior to being positioned within the nasal passageway. Alternatively, as illustrated in Figure 36, the handle can be configured with an infusion channel 1 19 for delivering the BoNT to the applicator tips following placement in the nasal passageway. In this configuration, the handle may further comprise an access port at its proximal section that is in fluid communication with a BoNT source.

As shown in Figure 33, the loop member may be configured to provide an outward lateral force such that the applicator tips 1 18 are firmly contacted against the nasal turbinates when placed in the nasal passageway. With reference to Figure 37A, the operator would apply inward pressure in the direction of the arrows to the handle to achieve a compressed configuration, as shown in Figure 37C, prior to inserting the applicator tips into the nose. Once the applicator tips of the device are properly inserted into the nasal passageway, this pressure would be released such that the outward bias in the handle transitions the handle from a compressed configuration to an expanded configuration, as shown in Figure 37B, wherein the applicator tips are pressed against the nasal turbinates. The applicator tips can be held against the turbinates by the outward bias for sufficient time to allow a therapeutically effective amount of BoNT to be absorbed by the nasal cavity wall.

This outward bias may be achieved by spring loading the device 120. Specifically, the handle itself may comprise a spring element, wherein the handle is dimensioned and configured with a residual spring force that exhibits this outward bias. Additionally or alternatively, the handle may comprise a material with mechanical properties to facilitate the spring action with little to no inelastic deformation resulting from the inward pressure applied by the operator. For example, at least a portion of the proximal section of the handle may comprise spring steel, stainless steel, nitinol, or MP35N alloy. Alternatively, as illustrated in Figure 38, a spring element 120 that is separate from the handle may be used to apply outward lateral pressure to the first and second members of the handle body.

[0125J To facilitate the insertion of the tip applicator through the nostril and into the nasal passageway, it may be desirable for the applicator tip to initially have a low volume configuration. Once properly positioned in the nasal passageway, it would be desirable for the applicator to have an expanded volume configuration for maximizing contact with the nasal turbinates. In one exemplary embodiment, the tip applicator may comprise a sponge such that the sponge 121 is in a low volume configuration when dry

Aerin Exhibit 1011, Page 238 of 2183
Aerin Medical Inc. v. Neurent Medical Ltd.
IPR2025-01126

(Figure 39A) and an expanded configuration when wet (Figure 39B), wherein the sponge 121 is configured to fit securely within the nasal passageway.

In the embodiment illustrated in Figures 39A and 39B, the dry sponge applicator could be preloaded with lyophilized BoNT and wetted with a liquid (e.g., saline) following placement of the applicator in the nasal passageway. The liquid can be introduced into the nasal passageway using a spray or a catheter, or the BoNT may simply be rewetted by the nasal secretions themselves. Alternatively, as described with respect to Figure 36, the liquid can be infused into the applicator tip through a channel 1 19 in the device handle. Still alternatively, the liquid infused through the channel can be a solution comprising BoNT, thereby eliminating the need for the dry sponge applicator to be preloaded with BoNT.

To facilitate the expansion of the applicator tip, thereby maximizing the surface contact between the nasal cavity wall and applicator tip, it may be desirable to incorporate a spring element 122 within the applicator tip 1 18. The embodiment in Figures 4OA and 4OB shows an applicator tip comprising a sponge 121 and a spring element 122 in an expanded and compressed configuration. This configuration can be used instead of or in addition to the wet/dry sponge embodiment discussed above.

The spring element may comprise any type of compressible spring and any number of elastically deformable polymers or metals, including, spring steel, stainless steel, nitinol, and MP35N alloy. As shown in many of the above embodiments, the spring element may comprise a v-shape spring. Alternatively, the spring element may comprise a closed-loop spring 123, as illustrated in Figure 41.

For embodiments utilizing a spring-loaded applicator tip, it will be necessary to hold the spring 122 in its compressed state until it is properly positioned within the nasal cavity, at which time the spring can be released to allow the aD[upsilon]licator to expand into the nasal cavity. In the wet/dry sponge 121 embodiment described with respect to Figures 39A and 39B, a sponge and spring can be selected and matched such that the stiffness of the dry sponge is sufficient to overcome the spring stiffness and hold the spring in a compressed configuration until it becomes wet.

In another embodiment employing a spring-loaded applicator tip, an actuator can be used to hold the spring in a compressed state. Figure 42 illustrates a spring-loaded applicator tip 124 that is restrained in a compressed state by a slidably-engaged actuator 125. The slidably-engaged actuator may comprise a retractable sheath or collar 126 for holding the spring in its compressed configuration. Once the applicator is positioned within the nasal cavity, the actuator can be retracted to release the spring, thereby expanding the applicator.

J0131] The device may optionally comprise an engagement element 127 for engaging and retracting the actuators on both applicators. Figure 43 shows a device comprising a handle 1 15, two actuator-equipped applicator tips 124 and an engagement element 127 in contact with each applicator tip actuator 124. The engagement element is configured for movement along the longitudinal axis of the handle, wherein such movement may engage or retract the actuator resulting in compression or expansion of the spring-loaded applicator tip, respectively.

It may be desirable for the spring-assisted expansion of the applicator tip to be directionally biased to maximize contact with the wall of the nasal cavity and optimize

Aerin Exhibit 1011, Page 239 of 2183
Aerin Medical Inc. v. Neurent Medical Ltd.
IPR2025-01126

contact pressure with the nasal turbinates. For example, the spring element can be dimensioned and configured such that the applicator expands laterally towards the turbinates of the nasal cavity. Alternatively or additionally, portions of the applicator tip may comprise an impermeable lining such that delivery of BoNT to certain portions of the nasal cavity is optimized and undesirable migration of BoNT solution is minimized.

Although toxins can be administered to the body to achieve a therapeutic benefit, the same toxins can cause local and systematic damage to non-targeted body tissues. Accordingly, it would also be desirable for the apparatus to be configured such that only the amount of toxin necessary to treat the nasal cavity is loaded on the applicator tip and applied to the nasal wall. It this embodiment, it would be desirable for the applicator to carry a predetermined quantity of toxin, wherein the predetermined quantity is the amount necessary to provide a therapeutic effect. It would also be desirable for the applicator to be configured such that most, if not all, of the toxin carried on the applicatoi is dehvei ed to the nasal wall, wheiein little to no toxin runs, escapes oi migrates to non-target portions of body tissue

0134 Additionally, it would be desirable lor the applicator to be configured to provide a controlled delivei y of toxin to facilitate absorption of the toxin into the walls of the nasal cavity An applicator pi oviding a controlled delivei y of toxin can be configured such that the i ate ot toxin delivery is proportionate with the rate of BoNT absorption across the nasal membiane Such a controlled delivery will ensure that the toxin is absorbed into the nasal tissue and not dispersed elsewhere in the body

An apparatus for treating a nasal cavity of a patient via a controlled and uniform delivery of BoNT may comprise an applicator having an innei member, an outer member and an impermeable lining, wherein the impermeable lining separates the inner member and outer member In this embodiment, the outer member serves as a earner foi a toxin (e g , BoNT) The outer member may comp[pi]se any matenal or structure for carrying BoNT such as an open cell foam (e g , sponge), mesh pad, porous oi perforated balloon, polymeric sheet having microchannels, bioresorbable coating or muco-adhesive surface having wells or open-faced chambers The outer member may also comp[pi]se an array of microneedles to facilitate the passage of BoNT acioss the nasal membrane Alternatively, the outer member may comp[pi]se a combination of the structures and mate[pi]als mentioned above For example, the outer member may comprise a balloon coated with a sponge matenal, wherein the sponge material is configured to retain and subsequently release a predetermined quantity of toxin The inner member is configured for occupying space when the applicator is positioned within the nasal cavity such that the outer member is placed in contact with the wall of the nasal cavity The inner member may be any compliant material such as a sponge, balloon or foam rubber The impermeable lining (e g , tetrafluoroethylene) prevents the BoNT from retreating from the outei member to inner member and, accordingly, facilitates the transfer of BoNT from the applicator to the tissue of the nasal wall As with applicator embodiments that have been previously discussed herein, the outer member can be pre soaked or filled with BoNT solution, infused with BoNT following placement in the nasal passageway, or pre-loaded with freeze- d[pi]ed BoNT that can be reconstituted with infused saline

In one embodiment, both the inner and outer members may compnse balloons, wherein the BoNT is carried in the space between the inner and outer balloons The outer balloon can be a perforated polymer (e g , polyethylene terephthalate or expanded polytetrafluoroethylene) for releasing BoNT in a controlled and uniform

Aerin Exhibit 1011, Page 240 of 2183
Aerin Medical Inc. v. Neurent Medical Ltd.
IPR2025-01126

matter. The inner member can be a compliant balloon, wherein the volume occupied by the inner balloon can be adjusted by injecting a fluid (e.g., air or saline) into the inner balloon. In this configuration, the impermeable lining is comprised of the wall of the inner balloon and the applicator<'>s BoNT carrying capacity is based on the volume of the outer balloon relative to that of the inner balloon. For example, an applicator could be configured to carry less BoNT by increasing the inner balloon<'>s volume relative to the the outer balloon<'>s volume.

In a preferred embodiment, the inner member comprises (1) a low volume configuration to facilitate the applicator<'>s insertion into and placement within the nasal passageway and (2) an expanded volume configuration for pressing the outer member against the walls of the nasal cavity. The expansion of the inner member relative to the outer member can also facilitate the controlled release of BoNT from the outer member. Once the applicator is in its expanded volume configuration, additional fluid can be infused into the inner member to reduce the volume of the outer member relative to the inner member, thereby forcing the BoNT from the outer member. In fact, the expansion of the inner member may be configured such that the resulting stretching and compression of the outer member causes a controlled release of BoNT from the outer member, wherein the rate of BoNT release is proportional to the inner member<'>s rate of expansion. In the embodiment comprising an inner balloon and outer balloon, the expansion of the inner member can be facilitated by the introduction of fluid into the inner member. In other embodiments, the expansion of the inner member can be facilitated by a spring member.

In any of the embodiments discussed herein, it may be desirable to adapt the applicator to the geometry of the nasal cavity. For example, in embodiments comprising an outer member and inner member, the outer member can be configured to match the shape of the nasal cavity or portions of the nasal passageway following the expansion of the inner member. By achieving better contact, the delivery of toxin to and across the nasal membrane can be optimized.

To achieve a more focal treatment, the applicator tip can be equipped with a muco-adhesive pad that is pre-loaded with BoNT solution rather than a sponge. This pad can be configured to optimize the delivery of BoNT to the mucosa. Alternatively, the applicator tip may further comprise a bioabsorbable coating or film carrying BoNT. In this embodiment, the applicator tip may comprise a BoNT-loaded bioresorbable polymer that can be absorbed into the nasal cavity tissue. The tip can be configured such that the BoNT can be delivered to the nasal wall both immediately and as the coating is absorbed into the tissue.

Similar to the other devices discussed in this application, the device described with respect to Figure 33 and 34 can be used to deliver BoNT-LC to the nasal cavity instead of the BoNT intact molecule. In cases where this device is used to deliver BoNT-LC to the nasal cavity, any of the previously-described, energy-based delivery systems can be used to cause poration in the nasal tissue to facilitate delivery of the BoNT-LC to the tissue. Additionally or alternatively, this device can be equipped with an energy delivery element for causing poration in the target tissue in conjunction with delivery of BoNT-LC to the target tissue. For example, the device may comprise an electrode, antenna or ultrasonic transducer that is electrically connected to an energy generator configured for delivering energy via the energy delivery element to the target tissue at a voltage, amplitude, frequency, etc. sufficient to cause poration or permeabilization in the target tissue.

Aerin Exhibit 1011, Page 241 of 2183
Aerin Medical Inc. v. Neurent Medical Ltd.
IPR2025-01126

Throughout this disclosure, the LC solution has typically been referred to as an infused, aerosolized or sprayed liquid. LC incorporated into coatings on devices has also been described. It should be noted, however, that other forms of LC delivery may be desirable.

For instance, commercially available botulinum toxins (such as Botox tm - Allergan) are supplied as a dry lyophilized powder, and must be reconstituted prior to delivery by the addition of saline to the packaging vial. Similarly, light chain would be most readily available and stable in a powdered form. It may be desirable to spray or blow the powdered form of the LC into the target airways directly, without any reconstitution by liquid.

The lyophilized powder could also be formed into sheets, ribbons, pellets microspheres, or any other desirable form, and introduced to the target tissues.

Instead of a saline or low viscosity carrier, it may be desirable to deliver the light chain in a gel carrier, such as the types of gels which are commonly used for ultrasound coupling. Other appropriate gel carriers include such biocompatible gels as hyaluronic acid (HA). HA has the added benefit of being a thixotropic liquid - its viscosity drops as it begins to flow or as increasing shear stress is applied, and then returns to a higher viscosity state as it comes to rest. This would aid in delivery of the solution through catheters and the like, while allowing the gel to remain in place once delivered. HA is also extremely biocompatible, and would allow efficient ultrasonic coupling to the target tissues. The application of ultrasonic energy might also reduce the viscosity of the HA gel, possibly improving the delivery of toxin into the tissues.

It may also be desirable to incorporate the light chain into a foam, or to foam the LC solution upon or during delivery of the LC to the target tissues. Foams may better fill the entire targeted airway, and may trap water or coupling agents to allow efficient ultrasonic coupling. In a further embodiment, the foam may be energized within or as it exits the catheter shaft to further enhance the delivery of the LC to cells that are contacted by the energized foam and LC foam solution.

In addition to BTX-LC, it may be desirable to deliver additional agents to the nasal passages and sinuses prior to, coincident with, or after deliver of the LC. Adjunctive therapies may include agents designed to slow down or halt the motion of the cilia, in order to aid in delivery of the LC to the target tissues by prevention of their mobilization by the cilia. Agents known to slow or halt the motion of cilia include but are not limited to epinephrine dilutions of 1 :1000 (which causes ciliary death), 1 : 10,000 (which causes reversible paralysis), 10% cocaine (induces paralysis) or 2.5% cocaine (slows or stops cilia).

Other adjunctive therapies may include the use of or pretreatment with mucolytics, which will thin mucus secretions within the nose and may allow better penetration of LC into the target cells.

Decongestants such as epinephrine also cause constriction of the vasculature in the nasal passages, which in addition to temporarily reducing swelling of the target tissues, may decrease the risks of LC entering the blood stream during poration and delivery. Epinephrine also constricts the blood vessels locally, which may increase the residence time of other locally delivered agents or decrease their likelihood of entering systemic

Aerin Exhibit 1011, Page 242 of 2183
Aerin Medical Inc. v. Neurent Medical Ltd.
IPR2025-01126

circulation.

Steroids may be used to reduce swelling and inflammation prior to LC treatment in order to improve LC delivery to target tissues. In the abovementioned embodiments, it may be important to note that by far the most significant effects will be seen in areas where both the LC and the permeablizing energy are delivered. Therefore, although it may be best to deliver both LC and energy to substantially the same area, for reasons of anatomy, ease of delivery, etc., either the LC or the energy might be delivered more broadly, or to a somewhat different area. As an extreme example, the LC might be delivered systemically or to the entire respiratory pathway, followed by very localized delivery of energy to the desired area. Alternatively, the LC could be delivered to a specific sinus, followed by energy to the entire nose and sinus using a standardized external energy delivery mask.

While the above is a complete description of the preferred embodiments of the invention, various alternatives, modifications, and equivalents may be used. Therefore, the above description should not be taken as limiting the scope of the invention which is defined by the appended claims.

Aerin Exhibit 1011, Page 243 of 2183
Aerin Medical Inc. v. Neurent Medical Ltd.
IPR2025-01126

Espacenet

Claims: JP2009538641 (A) — 2009-11-12

APPARATUS, METHODS AND SYSTEMS FOR TOXIN DELIVERY TO THE NASAL CAVITY

Claims not available for JP2009538641 (A)
Claims of corresponding document: WO2007137235 (A2)

A high quality text as facsimile in your desired language may be available amongst the following family members:

EP3248612 (A1) US2007267011 (A1) WO2007137235 (A2) US2008021369 (A1) US2010087775 (A1) US2012089078 (A1) US2014114233 (A1) US2015367115 (A1)

- Original claims
- Claims tree

The EPO does not accept any responsibility for the accuracy of data and information originating from other authorities than the EPO; in particular, the EPO does not guarantee that they are complete, up-to-date or fit for specific purposes.

WHAT IS CLAIMED IS:

1 . An apparatus for treating inflammation of a nasal membrane of a patient comprising: a handle comprising a proximal section, a first member and a second member, wherein the first member and second member are connected at the proximal section; a first applicator tip coupled to the first member; and a second applicator tip coupled to the second member; wherein the first applicator tip and second applicator tip are each configured for insertion into a nostril of the patient and placement within a nasal passageway of the patient and wherein each applicator tip is configured for delivering a toxin to a region of nasal tissue within the nasal cavity of the patient, thereby treating the inflammation.

2. The apparatus of claim 1 , wherein the handle further comprises a spring element.

3. The apparatus of claim 2, wherein the spring element is either a v- shaped spring or closed-loop spring.

4. The apparatus of claim 2, wherein the handle is configured to be arranged in a compressed delivery configuration for placement of the applicator tips within the nasal passageway and an expanded treatment configuration for delivering toxin to the region of nasal tissue.

Aerin Exhibit 1011, Page 244 of 2183
Aerin Medical Inc. v. Neurent Medical Ltd.
IPR2025-01126

5. The apparatus of claim 1 , wherein each applicator tip comprises a sponge.

6. The apparatus of claim 5, wherein each applicator tip is configured to be arranged in a low volume delivery configuration for placement within the nasal passageway and an expanded volume treatment configuration for delivering toxin to the region of nasal tissue.

7. The apparatus of claim 6, wherein each applicator tip in the expanded volume treatment configuration is adapted to fit substantially within the nasal cavity of the patient.

8. The apparatus of claim 5, wherein each applicator tip further comprises a spring element.

9. The apparatus of claim 8, wherein each applicator tip is configured to be arranged in a compressed delivery configuration for placement within the nasal passageway and an expanded treatment configuration for delivering toxin to the region of nasal tissue.

10. The apparatus of claim 9, wherein each applicator tip further comprises an actuator, wherein the actuator is configured for movement from an engaged position and a retracted position.

1 1 . The apparatus of claim 10. wherein the applicator tip is in the compressed delivery configuration when the actuator is in the engaged position.

12. The apparatus of claim 10. wherein the applicator tip is in the expanded delivery configuration when the actuator is in the retracted position.

13. The apparatus of claim 10 further comprising an engagement element, wherein the engagement element is configured to control the movement of both actuators simultaneously.

14. The apparatus of claim 5, wherein each applicator tip further comprises an impermeable lining.

15. The apparatus of claim 1 , wherein each applicator tip further comprises a muco-adhesive pad.

16. The apparatus of claim 1 , wherein the toxin is carried by a bioresorbable coating.

17. The apparatus of claim 1 further comprising an infusion channel for delivering the toxin to the applicator tips.

18. The apparatus of claim 17 further comprising an access port, wherein the apparatus is in fluid communication with a toxin source via the access port.

19. The apparatus of claim 17, wherein the applicator tips are configured to receive the toxin prior to being positioned in the nasal passageway.

20. The apparatus of claim 17, wherein the applicator tips are configured to receive the toxin after being positioned in the nasal passageway.

Aerin Exhibit 1011, Page 245 of 2183
Aerin Medical Inc. v. Neurent Medical Ltd.
IPR2025-01126

21. The apparatus of claim 1 , wherein the toxin comprises at least one selected from the group consisting of a liquid, gel, foam, cream, lotion and lyophilized compound.

22. The apparatus of claim 1 , wherein the toxin comprises botulinum toxin.

23. The apparatus of claim 22. wherein the botulinum toxin is selected from the group of botulinum toxins consisting of A, B, C, D. E, F and G.

24. The apparatus of claim 22, wherein the toxin is a fragment of botulinum toxin.

25. The apparatus of claim 24, wherein the fragment is a light chain fragment of botulinum toxin.

26. The apparatus of claim 25 further comprising an energy delivery applicator configured for delivering energy to the region of nasal tissue to enhance delivery of the toxin to the nasal tissue.

27. The apparatus of claim 26, wherein the energy delivery applicator is adapted to deliver energy under conditions which cause poration of at least one cell in the region of nasal tissue.

28 . The apparatus of claim 26, wherein the energy delivery applicator is adapted to deliver an electric pulse.

29. The apparatus of claim 28, wherein the electric pulse is an RF signal.

30. The apparatus of claim 26, wherein the energy delivery is adapted to deliver energy selected from the group consisting of microwave, ultrasound and x-ray.

31. An apparatus for ti eating a condition associated with inflammation of a nasal membrane of a patient selected from the group consisting of rhinitis, rhinorrhea, hay fever and combinations thereof, said apparatus comprising. an applicator configured for (a) insertion into a nostril of the patient, (b) placement within a nasal passageway of the patient, and (c) delivering a therapeutically effective amount of a toxin to a region of nasal tissue within the nasal cavity of the patient, wherein the apphcatoi compiises an inner member and outei member.

32. The apparatus of claim 31 , wherein the applicator further comprises an impermeable lining configured for separating the inner member and outer member.

33. The apparatus of claim 31 , wherein the applicator is configured to be a[pi]anged in a low volume configuration for placement within the nasal passageway and an expanded volume configuration foi delivering the toxin to the nasal tissue

34 The apparatus of claim 33, wherein the innei member comprises a balloon.

35. The apparatus of claim 33, wherein the inner member comprises a sponge.

36. The apparatus of claim 35, wherein the inner member further comprises a spring element.

37. The apparatus of claim 31 , wherein the outei member compiises one selected from

Aerin Exhibit 1011, Page 246 of 2183
Aerin Medical Inc. v. Neurent Medical Ltd.
IPR2025-01126

the group consisting of a sponge, mesh pad, perforated balloon, porous polymer, bioresorbable coating, muco-adhesive surface and combinations thereof.

38. The apparatus of claim 31 , wherein the outer member comprises a balloon and a sponge.

39 . The apparatus of claim 31 , wherein the inner member is configured to expand.

40. The apparatus of claim 39, wherein expansion of the inner member facilitates delivery of the toxin to the nasal tissue

41. An apparatus for treating a condition associated with inflammation of a nasal membrane of a patient selected from the group consisting of rhinitis, rhinorrhea, hay fever and combinations thereof, said apparatus comprising: a handle comprising a first distal and a second distal end; a first applicator tip coupled to the first distal end; and a second applicator tip coupled to the second distal end; wherein the first applicator tip and second applicator tip are each configured for insertion into a nostril of the patient and placement within a nasal passageway of the patient and wherein each applicator tip is configured for delivering a therapeutically effective amount of a toxin to a region of nasal tissue within the nasal cavity of the patient, thereby treating the condition.

42. The apparatus of claim 41 further comprising a spring element, wherein the spring element is configured to provide the applicator tips with an outward bias when the applicator tips are placed within the nasal passageway.

43. The apparatus of claim 42, wherein the outward bias presses each applicator tip against a turbinate in the nasal cavity.

44. A method for delivering toxins to target cells in a nasal membrane of a patient, said method comprising: introducing a toxin to a region proximate the target cells; and applying energy to the target cells to enhance delivery of the toxin to the cells.

45. A method as in claim 44, wherein the region comprises at least one paranasal sinus, a main nasal passage or a nasal turbinate.

46. A method as in claim 44, wherein the region comprises substantially the entire nasal cavity.

47. A method as in claim 44, wherein the region comprises the nasopharynx.

48. A method as in claim 44, wherein the target cells comprise epithelial or goblet cells.

49. A method as in claim 44, wherein the energy is selectively applied to target cells within the region where toxin has been introduced.

50. A method as in claim 44, wherein the energy is applied non-selectively within the region where toxin has been introduced.

51. A method as in claim 44, wherein the patient suffers from or is at risk of suffering from rhinorreah.

52. A method as in claim 44, wherein the patient suffers from or is at risk of suffering

Aerin Exhibit 1011, Page 247 of 2183
Aerin Medical Inc. v. Neurent Medical Ltd.
IPR2025-01126

from sinus headaches.

53. A method as in claim 44, wherein the patient suffers from or is at risk of suffering from migraine headaches.

54. A method as in claim 44, wherein the toxin comprises botulinum toxin.

55. A method as in claim 54, wherein the toxin is a fragment of botulinum toxin.

56. A method as in claim 55, wherein the fragment is a light chain fragment of botulinum toxin.

57. A method as in claim 56, wherein the light chain fragment is derived from at least one of botulinum toxins A, B, C, D, E, F, and G.

58. A method as in claim 44, wherein the energy applied to the targeted region is an electric pulse.

59. A method as in claim 58, wherein the electric pulse is applied from between IV to 500V.

60. A method as in claim 58, wherein the electric pulse is an RF signal.

61. A method of claim 58, wherein the electric pulse is pulsed for durations between 5 microseconds to 100 milliseconds.

62. A method as in claim 58, wherein the electric pulse is produced by a DC power source.

63. A method as in claim 58, wherein the electric pulse is produced by an AC power source.

64. A method as in claim 44, wherein the energy applied to the target region is ultrasonic.

65. A method as in claim 44, wherein the energy applied to the targeted region is an x-ray beam.

66. A method as in claim 44, wherein the energy applied to the targeted region is focused ultrasound.

67. A method as in claim 44, wherein the energy applied to the targeted region is microwave.

68. A method as in claim 44, wherein the toxin is introduced to the target region through a catheter.

69. A method as in claim 68, wherein the toxin is introduced through a balloon on the catheter.

70. A method as in claim 69, wherein the balloon is porous and the toxin is introduced through the balloon.

Aerin Exhibit 1011, Page 248 of 2183
Aerin Medical Inc. v. Neurent Medical Ltd.
IPR2025-01126

71. A method as in claim 68, wherein the toxin is introduced through a needle on the catheter.

72. A method as in claim 68, wherein the toxin is aerosolized from the catheter.

73. A method as in claim 68, wherein energy is applied from a source on the catheter.

74. A method as in claim 73, wherein acoustic energy is applied from a transducer on the catheter.

75. A method as in claim 73, wherein electrical energy is applied from an electrode on the catheter.

76. A method as in claim 44, wherein the energy is delivered from a source external to the patient.

77. A method as in claim 76, wherein the source is an acoustic energy transducer.

78. A method as in claim 77, wherein the acoustic energy transducer is a focused ultrasound transducer.

79. A system for delivering toxins to target cells in a nasal membrane, said system comprising: a catheter adapted to introduce a toxin to a region proximate the target cells; an energy applicator configured for applying energy to the target cells under conditions which cause poration of the cell membranes to enhance delivery of the toxin; and a source of toxin suitable for introduction from the catheter.

80. A system as in claim 79, wherein the energy applicator is adapted to selectively apply energy to target cells within the region where toxin has been introduced.

81. A system as in claim 79, wherein the energy applicator is adapted to apply energy non-selectively within the region where toxin has been introduced.

82. A system as in claim 79, wherein the toxin comprises botulinum toxin.

83. A system as in claim 82, wherein the toxin is a fragment of botulinum toxin.

84. A system as in claim 83, wherein the fragment is a light chain fragment of botulinum toxin.

85. A system as in claim 84, wherein the light chain fragment is derived from at least one of botulinum toxins A, B, C, D, E, F, and G.

86. A system as in claim 44, wherein the energy applicator is adapted to apply an electric pulse of between Iv and 500V to the targeted region.

87 A system as in claim 86, wherein the electric pulse is an RF signal

88 A system as in claim 86, wherein the electric pulse is pulsed for duiations between 5 microseconds to 100 milliseconds

Aerin Exhibit 1011, Page 249 of 2183
Aerin Medical Inc. v. Neurent Medical Ltd.
IPR2025-01126

89 A system as in claim 86, wherein the electric pulse is produced by a DC power source

90 A system as in claim 86, wherein the electric pulse is produced by an AC power source

91 A system as in claim 44, wheiein the energy applicator is adapted to apply ultrasonic energy to the targeted region

92 A system as in claim 79, wherein the energy applicator is adapted to apply an x-ray beam to the targeted region

93 A system as in claim 79, wherein the energy applicator is adapted to apply focused ultrasound to the targeted region

94 A system as in claim 79, wherein the energy applicator is adapted to apply microwave to the targeted region

95 A system as in claim 79, wheiein the toxin is introduced by a balloon on the catheter

96 A system as in claim 95, wherein the balloon comprises one or more pores and the toxin is intioduced through the pores of the balloon

97 A system as in claim 79, wherein the toxin is introduced through a needle on the catheter

98 A system as in claim 95, wherein the toxin is aerosolized from the catheter

99 A system as in claim 79, wherein energy applicator is on the catheter

100. A system as in claim 99, wherein energy applicator applies acoustic energy from a transducer on the catheter.

101. A system as in claim 99, wherein energy applicator applies electrical energy from an electrode on the catheter.

102. A system as in claim 79, wherein the applicator applies energy from a source external to the patient.

103. A system as in claim 102, wherein the source further comprises an acoustic energy transducer.

104. A system as in claim 102, wherein the acoustic energy transducer further comprises a focused ultrasound transducer.

105. A system as in claim 79, wherein the toxin is introduced through a membrane supported on a scaffold on the catheter.

106. A system as in claim 79, wherein the toxin is introduced by a needless injector.

107. A system as in claim 79, wherein the energy applicator comprises a wave guide configured to be positioned within a nasal passageway.

Aerin Exhibit 1011, Page 250 of 2183
Aerin Medical Inc. v. Neurent Medical Ltd.
IPR2025-01126

108. A system as in claim 95, wherein the balloon is configured to be positioned within a nasal passageway.

109. A system as in claim 95, wherein the balloon is configured to be positioned outside of a sinus cavity.

1 10. A method as in claim 44, wherein applying energy to the target cells further comprises applying energy to the target cells under conditions which cause poration of the cell membranes.

1 1 1. A system as in claim 102, wherein the source further comprises a microwave antenna.

1 12. A method as in claim 73, wherein microwave energy is applied from he catheter.

Aerin Exhibit 1011, Page 251 of 2183
Aerin Medical Inc. v. Neurent Medical Ltd.
IPR2025-01126

Espacenet

Bibliographic data: JP2012143573 (A) — 2012-08-02

APPARATUS FOR RENAL NEUROMODULATION

Inventor(s): DEEM MARK; GIFFORD HANSON III; DEMARAIS DENISE; SUTTON DOUGLAS; THAI ERIK; GELFAND MARK; LEVIN HOWARD R ± (DEEM MARK, ; GIFFORD HANSON III, ; DEMARAIS DENISE, ; SUTTON DOUGLAS, ; THAI ERIK, ; GELFAND MARK, ; LEVIN HOWARD R)

Applicant(s): MEDTRONIC ARDIAN LUXEMBOURG SARL ± (MEDTRONIC ARDIAN LUXEMBOURG SARL)

Classification: **- international:** ***A61B17/00; A61B18/12; A61N1/05; A61N1/08; A61N1/10; A61N1/32;*** *A61F2/958; A61N1/36*

- cooperative: **A61B18/1206 (US); A61B18/1233 (US); A61B18/1492 (EP, US); A61B18/18 (US); A61B8/0891 (US); A61B8/12 (US); A61M25/0023 (US); A61M5/14 (US); A61N1/05 (US); A61N1/0551 (EP, US); A61N1/18 (US); A61N1/205 (US); A61N1/327 (EP, US); A61N1/36007 (US); A61N1/36017 (EP, US); A61N1/36057 (US); A61N1/36103 (US); A61N1/36114 (US); A61N1/36139 (US); A61N5/00 (US); A61N7/00 (US);** A61B2018/00071 (US); A61B2018/00214 (EP, US); A61B2018/0022 (US); A61B2018/00267 (US); A61B2018/00404 (EP, US); A61B2018/00434 (EP, US); A61B2018/00505 (EP, US); A61B2018/00511 (EP, US); A61B2018/00577 (US); A61B2018/00613 (EP, US); A61B2018/00642 (US); A61B2018/00904 (US); A61B2018/126 (US); A61B2018/1467 (US); A61N1/0412 (US); A61N1/326 (EP, US); A61N1/36117 (EP, US); A61N2007/0021 (US); A61N2007/003 (EP, US)

Application number: JP20120047201 20120302 Global Dossier

Priority number(s): US20040616254P 20041005 ; US20040624793P 20041102 ; US20050129765 20050513

Also published as: AT494039 (T) CA2583463 (A1) CA2583463 (C) CN101084038 (A) CN101084038 (B) more

Aerin Exhibit 1011, Page 252 of 2183
Aerin Medical Inc. v. Neurent Medical Ltd.
IPR2025-01126

Abstract of JP2012143573 (A)

PROBLEM TO BE SOLVED: To provide an apparatus for treating congestive heart failure, renal failure, hypertension, and/or other heart or kidney diseases with renal neuromodulation and/or renal denervation.SOLUTION: An apparatus for renal neuromodulation includes: a catheter 210 configured for intravascular placement within a renal artery or renal vein in a subject, and provided with an extendable distal basket formed from a plurality of struts or members; and a plurality of electrodes 212 disposed along the struts or members of the basket, and adapted to be positioned into contact with the wall of the renal artery or renal vein. The electrodes are configured to deliver an electric field across the wall of the renal vessel to target renal nerves to achieve renal denervation.

Aerin Exhibit 1011, Page 253 of 2183
Aerin Medical Inc. v. Neurent Medical Ltd.
IPR2025-01126

Patent Translate
Powered by EPO and Google

Notice

This translation is machine-generated. It cannot be guaranteed that it is intelligible, accurate, complete, reliable or fit for specific purposes. Critical decisions, such as commercially relevant or financial decisions, should not be based on machine-translation output.

DESCRIPTION JP2012143573A

Kidney nerve regulator

[0001]

<Mutual reference with related applications> This application applies to US patent provisional application serial number 60 / 616,254 filed on October 5, 2004 and US patent provisional application serial number 60 / 624,793 filed on November 2, 2004. The priority of each filing date is claimed, and the disclosure contents of both applications are assumed to be a part of the present specification by reference. In addition, this application is a partial continuation of US Patent Application Serial No. 10 / 408,665, which is pending at the same time as the April 8, 2003 application, which was published on November 20, 2003 in US Patent Publication No. 2003/0216792. Also, such applications are filed on April 8, 2002, US Patent Provisional Application Serial No. 60 / 370,190, October 3, 2002, No. 60 / 415,575, January 29, 2003. It asserts the priority of the filing date of No. 60 / 442,970 of the Japanese application, and by reference, all of these applications shall form part of the present specification in their entirety.

[0002]

<Incorporation of Disclosure Content by Reference> All publications and patent applications referred to herein are documentary content of this specification by reference to the content of the individual publications or patent applications in detail and individually. To the same extent as it constitutes part of, it is assumed that reference to the title or number constitutes part of this specification

[0003]

The present invention relates to a renal nerve regulation method and a device thereof.

In particular, the present invention relates to a good device for achieving neural regulation of the kidney by pulsatile electric and / or electroporation or electroporation.

[0004]

Congestive heart failure (CHF) is a condition that occurs when the heart is damaged and reduces the blood flow to the body organs.

When blood flow is significantly reduced, renal function becomes dysfunctional, resulting in fluid stagnation, abnormal hormone secretion, and increased vascular stenosis.

Such results increase the workload of the heart and further reduce the heart's ability to pump blood through the kidneys and circulatory system

[0005]

Aerin Exhibit 1011, Page 254 of 2183
Aerin Medical Inc. v. Neurent Medical Ltd.
IPR2025-01126

This diminished capacity further reduces blood flow to the kidneys, which in turn further reduces the capacity of the heart.

Gradual reduction of renal perfusion appears to be the main non-causal cause of heart disease and to constrain the descending spiral of congestive heart failure.

In addition, fluid overload and the associated clinical symptoms resulting from the physiological changes described above are the dominant causes, resulting in excessive hospitalization costs and severe quality of life deterioration for congestive heart failure. , The overwhelming cost required for the health management system is required.

[0006]

Congestive heart failure, once it occurs, is divided into two types, although many different diseases initially damage the heart.

That is, it is divided into chronic congestive heart failure and acute (or decompensated chronic) congestive heart failure.

Chronic congestive heart failure is a long-term, slowly progressive metamorphic disease.

Over the years, chronic congestive heart failure causes heart failure.

When clinically classifying chronic congestive heart failure, the patient's ability to exercise or perform daily activities (eg, the ability defined by the New York Heart Association Functional Class). Classified based on.

Patients with chronic congestive heart failure are usually managed on an outpatient basis and are most commonly on medication.

[0007]

Patients with chronic congestive heart failure may experience sudden and severe heart failure, which is called acute congestive heart failure, in which the heart maintains sufficient blood flow and blood pressure to nourish the living organs of the body. You will not be able to.

This decline in function due to acute congestive heart failure occurs when extra pressure (such as infection or excessive fluid overload) significantly increases the cardiac workload of patients with stable chronic congestive heart failure. be.

Compared to the gradual and declining progression of chronic congestive heart failure, patients suffering from acute congestive heart failure already develop dysfunction from the earliest stages of congestive heart failure, leading to severe blood flow dips.

In addition, acute congestive heart failure can occur hours or days after an acute myocardial infarction (AMI), commonly referred to as a "heart attack" due to sudden and irreparable damage to the muscles of the heart.

[0008]

As mentioned above, the kidney not only plays an important role in the progression of chronic renal failure (CRF), end-stage renal failure (ESRD), hypertension (pathologically high blood pressure), and various other cardiorenal diseases. It also plays an important role in the progression of congestive heart failure (CHF).

The functions of the kidney can be outlined on the basis of three broad categories: the release of waste products produced by hemofiltration and the metabolism of the body, salts and water, electrolytes and acids. -Regulation of base balance and hormone secretion for maintaining blood flow in active organs.

Without a properly functioning kidney, patients suffer from water stagnation, diminished urine flow, and accumulation of harmful waste products in the blood and body.

These symptoms caused by decreased renal function or renal disease (renal failure) are thought to increase the workload of the heart.

In patients with congestive heart failure, the accumulation of water and the accumulation of harmful substances in Echinaka due to the impaired kidney causes further deterioration of the heart due to renal failure, which in turn causes further harm to the heart.

[0009]

Aerin Exhibit 1011, Page 255 of 2183
Aerin Medical Inc. v. Neurent Medical Ltd.
IPR2025-01126

The major functional unit of the kidney involved in urine production is called the "nephron".

Each kidney is composed of about 1 million nephrons.

Nephrons are made up of glomeruli and their multiple tubules, which are divided into multiple parts, namely the proximal tubule, the neutral loop (Henle's loop), and the distal tubule.

Nephrons are surrounded by a number of different types of cells, each capable of secreting several substances and hormones (eg, renin, erythropoietin, etc.).

Urine is produced as a result of a complex process that begins by filtering plasma water from the blood and pouring it into the glomerulus.

The glomerular wall is sufficiently permeable to water and molecules, but nearly impermeable to protein and large molecules.

Thus, in a healthy kidney, the filtered fluid is virtually protein-free and free of cellular elements.

The filtered fluid that eventually becomes urine flows through the tubules.

The final chemical composition of urine is measured after it is secreted into the urine, which is necessary to maintain homeostasis, and the substance is reabsorbed from such urine

[0010]

Assuming that about 20% of the cardiac blood supply is received, the two kidneys filter about 125 milliliters of plasma water per minute.

The cause of filtration is the pressure gradient applied to the glomerular membrane.

Pressure in the renal arteries pushes plasma water into the glomerulus, causing filtration.

To keep the glomerular filtration rate (GFR) relatively constant, the pressure in the glomerulus is applied to the introductory and outbound arteries, that is, the muscular walled blood vessels that enter or exit the glomerulus. It is kept constant by contraction or expansion.

[0011]

In patients with congestive heart failure (CHF), the heart gradually weakens and blood flow and blood pressure drop within the patient's circulatory system.

During acute heart failure, short-term compensatory effects work to maintain perfusion in important organs such as the brain and heart that cannot tolerate long periods of diminished blood flow.

However, this same reaction, which initially assists in the struggle for survival during acute heart failure, becomes a detrimental reaction during chronic heart failure.

[0012]

The combination of multiple complex mechanisms leads to the detrimental fluid overload of congestive heart failure (CHF).

When the heart becomes dysfunctional and blood pressure drops, the kidneys become dysfunctional because the blood pressure is insufficient to obtain perfusion.

As a result of such dysfunctional state of renal function, urine output eventually decreases.

Without sufficient fluid output, the body accumulates fluid, resulting in fluid overload, among other unwanted symptoms such as peripheral tissue edema (swelling of the legs) and shortness of breath (swelling of the legs). Due to fluid in the lungs), and fluid stasis in the abdomen occurs in the patient.

[0013]

In addition, a decrease in cardiac blood flow results in decreased renal blood flow, increased neurohormonal stimulation, and release of the hormone renin from the juxtaglomerular apparatus of the kidney.

This results in a large amount of sodium retention and thus volume expansion.

Aerin Exhibit 1011, Page 256 of 2183
Aerin Medical Inc. v. Neurent Medical Ltd.
IPR2025-01126

Increased renin produces angiotensin, a potent vasoconstrictor.

Heart failure and the resulting decrease in blood pressure also reduce blood flow and perfusion pressure within other internal organs rather than the kidneys.

Such internal organs become hypoxic when blood pressure drops, resulting in metabolic acid poisoning, which reduces the effectiveness of pharmacological treatments and increases the risk of sudden death.

[0014]

At least part of the above-mentioned vicious cycle of hypofunction observed by doctors in patients with heart failure seems to be mediated by the delicate interaction between cardiac function and renal function, which is known as the renin-angiotensin system. Is done.

Impaired blood pumping function of the heart results in reduced cardiac flow and reduced blood flow.

The kidneys respond to this decrease in blood flow as if the total blood volume had decreased, but even in such cases, the measured blood volume is actually normal or rather increased.

This causes fluid stasis and swelling by the kidneys, which increases fluid overload and pressure on the heart.

[0015]

Systematically, congestive heart failure (CHF) is associated with abnormally elevated peripheral vascular resistance and is characterized by degeneration of blood circulation caused by severe impairment of sympathetic nervous system function.

Increased activity of the sympathetic nervous system accelerates the vicious cycle toward decline, in which arterial vasoconstriction increases (vascular resistance to blood flow increases) and then cardiac blood supply volume further decreases. It even reduces the amount of blood flowing into the organs.

[0016]

In congestive heart failure due to the mechanism of vasoconstriction described above, the heart and circulatory system dramatically reduce the flow of blood to the kidneys.

During congestive heart failure, the kidneys are commanded by higher nerve centers by neural pathways and hormonal messengers to stagnate fluid and sodium in the body.

In response to pressure on the heart, the nerve center commands the kidneys to reduce filtration function.

Such directives may be effective for a short period of time, but if such directives last for hours or days, they can be life-threatening or end kidney function. This may force you to rely on artificial kidneys for survival.

[0017]

If the kidneys do not filter the blood sufficiently, a large amount of fluid will stagnate in the body, resulting in bloating (fluid stagnation in the tissue) and increasing the workload of the heart.

Fluid can also penetrate into the lungs, causing shortness of breath in the patient.

To explain this strange and self-destructive phenomenon, the effect of the normal compensatory mechanism of the body that cannot fully recognize the chronic hypotension of congestive heart failure (CHF) as a sign of a temporary disorder such as bleeding. Seems to be the best.

[0018]

In serious situations, the body seeks to protect the most sensitive organs, the brain and heart, from the risk of oxygen deficiency.

Commands are issued by neural pathways, hormonal pathways, and messengers.

Such directives are issued towards the goal of maintaining blood pressure for the brain and heart.

Aerin Exhibit 1011, Page 257 of 2183
Aerin Medical Inc. v. Neurent Medical Ltd.
IPR2025-01126

The brain and heart cannot withstand low perfusion even for a short period of time.

When blood pressure on these organs drops to unacceptable levels, it results in a stroke or heart attack.

Other organs, such as the kidney, can withstand some of the longer ischemic periods and do not suffer long-term damage.

Therefore, the body sacrifices the blood supply to these kidney-like organs to keep the brain and heart alive.

[0019]

Blood flow dynamic disorders caused by congestive heart failure (CHF) activate several neurohormonal systems such as the renin-angiotensin-aldosterone system, the sympathetic adrenal system, and promote vasopresin release

Increased renal vasoconstriction reduces glomerular filtration rate (GFR) and increases sodium loading in the circulatory system.

At the same time, more renin is released from the juxtaglomerular spheres of the kidney.

Combined effects of reduced renal function include reduced glomerular sodium load, aldosterone-mediated sodium tubule reabsorption, and stagnation of sodium and water in the body.

These effects will eventually lead to some of the symptoms of congestive heart failure, including cardiac swelling due to stasis of fluid and sodium in the kidneys, increased systolic wall compression, increased demand for myocardial acid, and the formation of swelling. Leads to signs and symptoms.

Therefore, the direct responsibility for persistent stasis and vasoconstriction in renal blood flow lies in the development of fluid stasis associated with congestive heart failure.

[0020]

Congestive heart failure (CHF) is progressive and currently incurable.

It is clear that the limits of drug treatment and that even with drug treatment, it is not possible to improve the functional decline of patients with congestive heart failure, or even to completely prevent the decline.

Surgical treatment may be effective in some cases, but due to the risks and costs involved, it is limited to the end-stage patient population.

Moreover, the dramatic role that the kidney plays in hypofunction in patients with congestive heart failure is not adequately addressed by current surgical treatments.

[0021]

The autonomic nervous system is recognized as an important pathway for controlling signals that govern the regulation of physical functions that are important for maintaining blood flow balance and blood pressure.

The autonomic nervous system is central to the nervous system's sensory fibers from physical biological sensors such as baroreceptors (which respond to the pressure and volume of blood) and chemoceptors (which respond to various chemical constituents of the blood). It transmits information in the form of signals to the nervous system.

The autonomic nervous system also transmits command signals from the central nervous system that control various neural distribution components of the vascular system via motor nerve fibers.

[0022]

The human kidney transplant experience has provided evidence of the role of the nervous system in kidney function.

Even after transplantation, the kidneys increased water and sodium excretion, even though all kidney nerves were completely cut off.

Such a phenomenon was also observed in animals when the renal nerve was severed or chemically destroyed

This phenomenon is called "neurolytic diuresis" because denervation has had a diuretic-like effect on the kidneys.

Aerin Exhibit 1011, Page 258 of 2183
Aerin Medical Inc. v. Neurent Medical Ltd.
IPR2025-01126

Later, it was found that "neurolytic diuresis" was associated with vasodilation of the renal arterial system, which resulted in increased blood flow through the kidneys.

Such observations were confirmed by observations in animal studies in which the effect of "neurolytic diuresis" was reduced by causing a decrease in blood pressure in the kidney.

[0023]

It was also observed that several months after the successful transplant surgery, the transplant subject presented with "neurolytic diuresis" and renal function returned to normal.

Originally, "renal diuresis" was a transient phenomenon, and it was thought that the nerves that transmit signals from the central nervous system to the kidneys were not essential for renal function.

Subsequent findings imply that the renal nerves have a profound ability to regenerate, partly because they counteract the effects of "neurolytic diuresis" and give the kidneys the necessary stimuli. The point was that new nerve fibers could be grown.

[0024]

Another series of studies focuses on the role of the kidneys in neuromodulating the secretion of the hormone renin.

As mentioned earlier, renin is the hormone responsible for the "vicious circle" of vasoconstriction and water and sodium stasis in patients with heart failure.

It was shown that by increasing or retreating the sympathetic nerve activity of the kidney, the increase and decrease of the renin secretion rate by the kidney were realized in parallel, respectively.

[0025]

In summary, clinical experience and extensive animal experiments indicate that increased renal sympathetic activity causes vasoconstriction of the blood vessels that supply the kidneys, and that backward renal sympathetic activity excretes water and sodium from the body. It was found to be responsible for the decrease and increase in renin secretion.

The above process can be reversed by reducing the sympathetic nerve activity of the kidney, for example by nerve removal.

[0026]

Animal models have confirmed that abnormally elevated renal sympathetic nerve stimulation occurs as a result of symptoms of heart failure.

As a result of tracking such a phenomenon, it was determined that the cause was the sensory nerve that transmits a signal from the baroreceptor to the central nervous system.

Pressure receptors are present at several different sites in the vascular system.

There is a strong relationship between carotid baroreceptors (which supply arterial blood to the brain) and sympathetic stimulation of the kidneys.

Sudden drops in arterial blood pressure in experimental animals suffering from heart failure increase sympathetic tone.

Nevertheless, in patients with chronic congestive heart failure (CHF), normal pressure reflexes alone are unlikely to contribute to increased renal nerve activity

When arterial blood pressure levels drop over an extended period of time, pressure receptors are usually "reset", i.e., return to reference levels of activity and remain until new disorders are introduced.

Therefore, in patients with congestive heart failure, the components of the autonomic nervous system responsible for blood pressure control and neural control of renal function are thought to be abnormal.

The exact mechanism responsible for this anomaly is not well understood, but its effect on the overall symptoms of patients with congestive heart failure is extremely detrimental.

[0027]

Aerin Exhibit 1011, Page 259 of 2183
Aerin Medical Inc. v. Neurent Medical Ltd.
IPR2025-01126

End-stage renal disease (ESRD) is another symptom that is at least partially controlled by renal nerve activity.

The number of patients suffering from end-stage renal disease has increased dramatically due to diabetic nephropathy, chronic glomerulonephritis, and uncontrolled hypertension.

Chronic renal failure (CRF) progresses slowly to end-stage renal failure.

Chronic renal failure represents a critical stage in the progression of end-stage renal disease.

The signs and symptoms of chronic renal failure are initially mild, but after 2 to 5 years, they become progressive and have no chance of recovery.

The clinical efficacy of existing interventions remains limited, despite any progress in combating the progression of disease towards end-stage renal disease or the complications of end-stage renal disease.

[0028]

Systemic hypertension, proteinuria (hypertension produced by filtering blood into urine), glomeruli due to renal failure of a wide range of etiologies (hypertension, infection, trauma, autoimmune disease, etc.) It has been known in recent decades that chronic renal failure (CRF) symptoms, characterized by a gradual decline in filtration rate (GFR), occur, resulting in end-stage renal failure (ESRD).

These observations imply that the progression of chronic renal failure following a common mechanism pathway and the interventional treatment that suppresses such a common pathway are independent of the primary cause of chronic renal failure. It means that it may succeed in slowing down the progress of.

[0029]

At the beginning of the vicious circle of chronic renal insufficiency (CRF), initial damage to the kidney causes the loss of certain amounts of nephrons.

In order to maintain normal glomerular filtration rate (GFR), there is activity of compensatory renal and compensatory systemic mechanisms that result in overfiltration conditions in the residual nephrons.

However, in the end, overfiltration results in the loss of more nephrons damaged by "overwork".

At some point, a sufficient number of nephrons are lost and normal glomerular filtration rate can no longer be maintained.

Such pathological changes in chronic renal failure result in exacerbation of systemic hypertension and therefore increased intraglomerular hypertension and hyperfiltration.

As the glomerulus becomes over-filtered and the permeability increases in chronic renal failure, more protein is extruded from the blood through the glomerulus into the renal tubules.

Such proteins are directly harmful to the tubules, further depleting nephrons and increasing the rate of progression of chronic renal failure.

Furthermore, even if the glomerular filtration rate decreases with the loss of nephrons, such a vicious cycle of chronic renal failure continues, and excessive filtration further progresses, eventually causing end-stage renal failure (ESRD). The need for dialysis arises.

Clinically, hypertension and excess protein filtration have been found to be two major predictors of the rate of progression of chronic renal failure to end-stage renal failure.

[0030]

As was previously known clinically, it was not until the 1980s that the physiological link between hypertension, proteinuria, nephron loss and chronic renal insufficiency (CRF) was first recognized. rice field.

1990In the 1980s, the role of sympathetic nervous system activity was elucidated.

Signals coming from the kidneys damaged by the activity of mechanoreceptors and chemical receptors stimulate the areas of the brain that control blood pressure

Aerin Exhibit 1011, Page 260 of 2183
Aerin Medical Inc. v. Neurent Medical Ltd.
IPR2025-01126

In response, the brain increases sympathetic nerve stimulation at the systemic level, resulting in an increase in blood pressure, primarily due to the contraction of blood vessels.

When the increased sympathetic stimulation reaches the kidney by the out-licensing sympathetic fibers, the kidney produces two forms of serious adverse effects.

The kidneys are damaged by direct renal toxicity due to the release of renal sympathetic neurotransmitters (eg, norepinephrine), independent of hypertension.

In addition, increased secretion of renin, which activates angiotensin II, promotes systemic vasoconstriction and exacerbates hypertension.

[0031]

Over time, damage to the kidneys further increases the sympathetic nerve signals on the out-licensing side that are sent from the kidneys to the brain.

Elevated angiotensin II further promotes the release of neurotransmitters in the kidney.

Thus, the feedback loop closes, which accelerates renal dysfunction.

[0032]

In view of the above, it is provided a method and an apparatus thereof for treating congestive heart failure, renal failure, hypertension, and / or other cardiorenal diseases by renal nerve regulation and / or renal nerve ablation. desirable.

[0033]

The present invention provides a renal nerve regulation method (eg, nerve removal method) utilizing a pulse output electric field (PEF) and a device thereof.

Some aspects of the present invention apply a pulsed output electric field to perform electrical perforation and / or electromelting of nerve fibers that contribute to renal nerves and renal nerve function and other nerve fibers.

Some embodiments of the present invention are intravascular devices that induce renal nerve regulation.

The devices and methods described herein are suitable electrical signal parameters or electric fields that achieve neuromodulation such as denervation and / or otherwise provide electroporation and / or electromelting effects. Parameters can be used.

For example, electrical signals can incorporate nanosecond pulse output electric fields (nsPEF) and / or pulse output electric fields (PEF) for the purpose of performing electroporation.

In one particular embodiment, electroporation with a pulsed output electric field in the first path is followed by electroporation with a nanosecond pulsed output field in the second path, with the cells following the pulsed output field. All include the steps of inducing self-destruction with appointments, unharmed, or the same steps of simply reversing the order of electroporation.

Alternative embodiments include melting nerve cells by applying a pulsed output electric field in such a manner that it is expected to reduce or eliminate the ability of the nerve to perform electrical shocks.

When such methods and devices are applied to renal fibers and / or other nerve fibers that contribute to renal function, the present invention relates to congestive heart failure, hypertension, various diseases of the renal system, and others. Urinary excretion is increased and / or hypertension is suppressed in an embodiment of preventing or treating renal damage.

[0034]

Some aspects of a particular embodiment can achieve the results described above by selecting suitable parameters for the pulsed output field and / or the nanosecond pulsed output field.

Various parameters of the pulse output electric field include, but are not limited to, electric field strength, pulse width, pulse shape, number of pulses, and / or pulse intervals (eg, duty cycle).

Aerin Exhibit 1011, Page 261 of 2183
Aerin Medical Inc. v. Neurent Medical Ltd.
IPR2025-01126

Suitable electric field strengths include, for example, each level of strength up to about 10,000 volts (10,000 V / cm) per centimeter.

Suitable pulse widths include, for example, widths of various lengths up to about 1 second.

Suitable shapes of pulse waveforms include, for example, DC waveforms, sine waves, cosine waves, combinations of sine and cosine waves, DC waveforms, DC shifted AC waveforms, high frequency waveforms, square waves, trapezoidal waves, exponential. Attenuated waves, combinations of these, etc. are included.

The suitable number of pulses is, for example, at least one.

Suitable pulse intervals are, for example, intervals of less than about 10 seconds.

If desired, these parameters may be used in any combination.

Such parameters are presented for illustration purposes only and should never be construed as limiting.

Other alternative waveform parameters are trivial.

[0035]

Some embodiments provide long-lasting denervation to minimize the spread of acute myocardial infarction (AMI) and help prevent the development of tissue morphological changes associated with congestive heart failure. It is intended for the cutaneous tube system.

For example, one embodiment of the present invention provides X-ray fluoroscopic guidance on a step of treating a patient's infarct formation, such as by cardiovascular angioplasty and / or stenting, and a renal nerve removal procedure using a transarterial pulse output electric field. It includes the process to be carried out originally.

As an alternative example, pulse output field therapy can be performed at another time immediately after the acute myocardial infarction has stabilized.

Renal neuromodulation may also be employed as a supplemental treatment for renal surgical procedures.

In such an embodiment, the heart is affected to prevent the spread of infarct and prevent congestive heart failure by the predicted enhancement of urinary excretion and / or blood pressure suppression provided by renal pulse output electrotherapy. It is expected to reduce the load.

[0036]

Some embodiments of the tube pulse output electric field system described in this case may perform denervation of the renal nervous system or reduce activity of the renal nervous system immediately after or after infarction. Despite this, it is not necessary to permanently leave the implant in the patient's body.

Such embodiments are expected to increase urine output and / or suppress blood pressure during the months in which the patient's heart is healing.

If repetitive and / or long-term neuromodulation is determined to be beneficial after such a healing period, renal pulse output field therapy may be repeated as needed.

[0037]

In addition to effectively treating acute myocardial infarction (AMI), some embodiments of the system described in this case also include congestive heart failure (CHF), hypertension, renal failure, and others, the kidney. It is also expected to treat renal diseases and cardiorenal diseases caused by the effects and actions of sympathetic nerve activity.

For example, the various systems of the present invention can be used at any time to treat congestive heart failure by injecting the pulse output electric field system through the vascular structure to the treatment site and then performing the pulse output electric field treatment at the treatment site.

It can, for example, adjust the level of fluid load removal.

[0038]

Aerin Exhibit 1011, Page 262 of 2183
Aerin Medical Inc. v. Neurent Medical Ltd.
IPR2025-01126

Various embodiments of the tube pulse output electric field system described in this case can be used in the same manner as an angiogenic catheter or an electrophysiological catheter well known in the art.

For example, standard Serzinger techniques can be used to approach the artery, but optionally, an arterial sheath member may be installed to approach the catheter.

After the guide wire has entered the patient's renal artery through the blood vessel, it travels over this guide wire and / or advances through the sheath member to the tube pulse output electric field system to enter the renal artery. You may do so.

Optionally, the sheath member may be installed prior to inserting the pulse output electric field catheter, or the sheath member may be advanced with the pulse output electric field catheter so that some or all of the sheath member covers the catheter. You may do so.

As an alternative example, the pulse output electric field catheter may be entered directly through the vessel without the use of a guide wire and / or may be introduced into the vessel and advanced without a sheath member. ..

[0039]

In addition to the arterial installation, the pulse output electric field system can also be installed inside the vein.

Vein access can be achieved, for example, by cervical approach.

The pulsed output electric field system can be used, for example, in the renal arteries, in the renal veins, or inside both the renal arteries and the renal veins to promote more complete denervation. can.

[0040]

The pulsed output electric field catheter is placed in the desired location within the blood vessel in correlation with the target neuron and then stabilized in the blood vessel (eg, boiled to the blood vessel wall) before the target nerve or Energy is transferred to the target neuron.

In one variant, pulsed output high frequency energy is transmitted to the target site to provide a non-thermal nerve blocker to reduce neural signal transmission or otherwise regulate neural activity.

As an alternative or in addition to this, or in addition to this, cold, ultra-low temperature, thermal high frequency, thermal microwave or non-thermal microwave, directional or non-directional ultrasound, thermal or non-thermal DC. In addition, various combinations of these may be adopted to reduce the transmission of neural signals or to control the transmission of neural signals in other ways.

[0041]

In yet another embodiment of the invention, in addition to or instead of the renal neural structure, other neural structures other than the kidney are targeted and approached from inside the renal arterial or venous conduit. You may do so.

For example, a pulsed output electric field catheter can be steered through the aorta or vena cava and juxtaposed with a variety of neural structures to treat symptoms other than those mentioned above, or to undertake treatment of various cardiorenal disorders.

For example, the lumbar sympathetic chain can be approached, regulated, blocked, lysed, or otherwise treated in this manner.

[0042]

Some embodiments of the pulsed output electric field system can completely block or denervate the target neural structure, otherwise the pulsed output electric field system can regulate renal neural activity.

Unlike complete nerve blockade, such as denervation, other nerve regulation results in incomplete changes in the level of renal nerve activity between the kidney (one or both) and the rest of the body.

Therefore, varying the pulse output electric field parameters will have a number of different effects on neural activity.

[0043]

Aerin Exhibit 1011, Page 263 of 2183
Aerin Medical Inc. v. Neurent Medical Ltd.
IPR2025-01126

In one embodiment of a tube pulse output electric field system, the device comprises one or more electrodes, which are arranged to physically contact the target area of the renal vessel to provide the pulse output electric field. ..

For example, the device can be configured to include an expandable spiral and one or more electrodes of the spiral.

The catheter is placed in the renal vessel while exhibiting a low profile configuration.

The expandable portion is then in an expanded state and can come into contact with the inner surface of the blood vessel wall.

As an alternative, the catheter may include one or more expandable helical electrodes.

For example, the first expandable electrode portion and the second expandable electrode portion are installed in the blood vessel at a desired distance from each other, and an active electrode and a feedback electrode can be provided.

The expandable electrode unit may be a shape memory member, an inflatable balloon, an expandable mesh material, a connecting system, or any other type of device that can be expanded in a suppressed manner.

A suitable expandable coupling system is an expandable basket, which comprises multiple hypotubes with multiple shape storage wires or slots and / or multiple expandable rings.

In addition, the expandable electrode may be a point contact electrode placed along the balloon portion of the catheter.

[0044]

Another embodiment of the pulse output electric field comprises an electrode that does not physically contact the vessel wall.

High frequency energy, i.e. both conventional thermal energy and relatively non-thermal pulsed output high frequency energy, can be transmitted to the tissue from a location short distances from the tissue to be treated itself. This is a specific example.

Other types of pulse output electric fields can also be used in situations where the electrodes do not physically contact the vessel wall.

In this way, the physical contact between the electrode contacts and the vessel wall or other tissue can directly apply a pulsed output electric field to the nerve, or the electrode contacts can be physically contacted with the vessel wall. It is possible to indirectly apply a pulse output electric field to the nerve without causing it.

Thus, the term "nerve contact" includes the system element making physical contact with the nerve and / or tissue proximal to the nerve, as well as electrical contact without physical contact with the nerve or tissue. It also includes that.

To indirectly apply the pulse output electric field, the device is equipped with a centering member, the device being configured to place the electrode in the central region of the vessel, or otherwise separating the electrode from the vessel wall. It is configured to let you.

The centering device comprises, for example, a balloon or an expandable basket

One or more electrodes are mounted on the central shaft of the centering member, either in alignment with the element in the longitudinal direction or on one side of either element. is.

When a balloon catheter is used, the inflated balloon can act as an insulator with increased impedance to orient, or direct, the pulse output electric field along the desired electrical flow path.

[0045]

In another embodiment of the system, the combination device comprises a transluminal catheter in which the first electrode of the catheter is configured to be in physical contact with the vessel wall, the second electrode of which is placed inside the vessel wall. It is configured to be separated from the blood vessel wall.

For example, the expandable helical electrode may be used in combination with a centrally located electrode to provide a bipolar electrode pair as described above.

[0046]

In yet another embodiment, the radial position of one or more electrodes with respect to the blood vessel wall can be dynamically varied to give directivity to the pulse output electric field generated by the electrodes.

Aerin Exhibit 1011, Page 264 of 2183
Aerin Medical Inc. v. Neurent Medical Ltd.
IPR2025-01126

In yet another variant, the electrodes may be configured to traverse part or all of the vessel wall.

For example, the electrodes (s) are placed inside the renal vein and then traversed the wall of the renal vein to follow the space around the inner blood vessel and at least one of the electrodes before the pulse output electric field is applied. The part may be arranged so as to go around the inner circumference of the renal artery and / or the renal vein.

[0047]

Bipolar embodiments of the present invention are configured to achieve treatment over a desired distance, desired volume, or other desired dimension by making dynamic movements or movements relative to the distance between the active electrode and the ground electrode. It may have been done.

For example, the plurality of electrodes may be arranged so that the distance between the electrodes is adjusted by moving the pair of bipolar electrodes in the long axis direction with respect to each other, and / or the treatment site is varied.

One particular embodiment comprises a first electrode coupled to the catheter and a movable second electrode capable of moving within the lumen of the catheter.

In an alternative embodiment, the first electrode and the second electrode can be attached to a catheter and the second electrode can be attached to a device carried in a blood vessel, so that the first electrode and the second electrode are positioned in correlation with each other. By reducing the distance, it is possible to buy the separation distance between the electrodes.

Such embodiments facilitate the treatment of diverse renal vascular anatomy.

[0048]

Any of the embodiments of the present invention described in the present invention may optionally be configured to inject the drug into the therapeutic area before, during, or after energy donation.

Injectable agents can optionally improve or alter the neuromodulatory effect of energy delivery

Such agents can also protect and temporarily evacuate non-target cells and / or promote visualization.

[0049]

Some embodiments of the invention may include a detector or other element that facilitates location identification for treatment and / or determines or confirms the success of treatment.

For example, the system may be configured to generate stimulus waveforms and monitor physiological parameters known to respond to serious stimuli in the human layer.

Based on the results of the monitored parameters, the system can determine the location of the renal nerves and / or whether or not denervation has occurred.

Detection devices that monitor such physiological responses include, for example, Doppler elements, thermocouples, pressure sensors, imaging physiotherapy (eg, X-ray fluoroscopy, transluminal ultrasound, etc.) and the like.

As an alternative example, electroporation may be monitored directly, for example using electrical impedance tomography (EIT) or other electrical impedance measurement method.

Other monitoring techniques and monitoring elements are also self-evident.

Such a detector may be integrated with the pulse output electric field system or may be a separate element.

[0050]

Yet another particular embodiment comprises electrodes configured to align the electric field with the longer dimension of the target cell.

For example, kidney cells have an elongated structure and tend to have a vertical length that far exceeds lateral dimensions (eg, diameter).

Aerin Exhibit 1011, Page 265 of 2183
Aerin Medical Inc. v. Neurent Medical Ltd.
IPR2025-01126

By aligning the electric field so that the directivity of the electric field propagation preferentially affects the vertical aspect of the cell rather than the lateral aspect of the cell, the lower electric field strength is used to kill or stop the target cell. It is expected that it can be done.

This is expected to preserve the battery life of the implantable device, reduce the ancillary effects on adjacent structures, and otherwise improve the ability of target cells to regulate neural activity.

[0051]

In yet another embodiment of the invention, the longitudinal dimension of the cells of the tissue located above or below the nerve is transverse (eg, orthogonal or orthogonal) with respect to the longitudinal dimension of the nerve cell. , Forming a certain angle other than a right angle) The purpose is an application example.

Another aspect of such an embodiment is directional alignment of the pulse output electric field so that the pulse output electric field aligns with the longer dimension of the target cell and the shorter dimension of the non-target cell.

More specifically, arterial smooth muscle cells are usually elongated cells that surround the artery in a generally spiral orientation, so each longer dimension extends along the long axis of the artery. Rather than being there, it extends in the circumferential direction.

On the other hand, the nerves of the renal vascular plexus extend approximately along the lateral axis of the artery along the longitudinal direction of the artery.

Therefore, by applying a pulse output electric field that is approximately aligned in the long axis direction of the artery, the target nerve cells are preferentially electroporated, but at least a part of the non-target arterial smooth muscle cells is affected. It is expected that it will not affect the degree.

As a result, preferential nerve removal from the tube device to the nerve cells (target cells) of the nerve cells (target cells) in the outer membrane of the blood vessel or the peripheral region is performed, and the smooth muscle cells of the blood vessel are affected to an undesired degree. Can be avoided.

[0052]

It is a perspective view which illustrates the anatomical structure of a human kidney.

It is a schematic detailed view which illustrates the position of the renal nerve relative to a renal artery.

It is a schematic side view which exemplifies the direction of the electric current flow which is the purpose which affects the renal nerve selectively.

It is a schematic end view which exemplifies the direction of the electric current flow which is the purpose which affects the renal nerve selectively.

It is a partial cross-sectional schematic side view of the tube catheter provided with a plurality of electrodes according to the position embodiment of this invention.

FIG. 6 is a schematic side view of a partial cross section of a tube device in which a pair of expanding spiral electrodes are arranged at a desired distance from each other according to another embodiment of the present invention.

FIG. 3 is a schematic side view of a partial cross section of a tube device in which a first electrode is provided on an expandable balloon and a second electrode is provided on a catheter shaft according to another embodiment of the present invention.

A portion of a tube device according to another embodiment of the present invention, in which the expanding first electrode is carried in the lumen of the catheter and the second electrode complementary to the first electrode is carried on the catheter. It is a cross-sectional schematic side view.

FIG. 3 is a schematic side view of a partial cross section of a tube device including an expandable basket and a plurality of electrodes provided in the vicinity of the basket according to another embodiment of the present invention.

FIG. 3 is a schematic detailed view of the apparatus of FIG. 8 illustrating an embodiment of an electrode according to another embodiment of the present invention.

FIG. 3 is a schematic side view of a partial cross section of a tube device provided with an expandable ring electrode for contacting a blood vessel wall with an arbitrary insulating element according to another embodiment of the present invention.

Aerin Exhibit 1011, Page 266 of 2183
Aerin Medical Inc. v. Neurent Medical Ltd.
IPR2025-01126

FIG. 10 is a schematic detail view of three different embodiments of a plurality of different windings for the ring electrode of FIG.

It is a partial cross-sectional schematic side view of the tube device provided with the ring electrode of FIG. 10 together with the three types of windings exemplified in FIG.

FIG. 3 is a schematic side view of a partial cross section of a tube device provided with a ring electrode and an electrode carried in a blood vessel according to another embodiment of the present invention.

FIG. 3 is a schematic side view of a partial cross section of a tube device in which a balloon catheter and an expandable point contact electrode are located proximal and distal to the balloon, according to another embodiment of the invention.

FIG. 6 is a schematic side view of a tube device in which a balloon catheter and electrodes are arranged proximal and distal to the balloon according to another embodiment of the present invention.

(A) is a partial cross-sectional schematic side view illustrating one step step of the method adopting the apparatus of FIG. 15 according to the embodiment of the present invention, and (B) is FIG. 15 according to the embodiment of the present invention. It is a partial cross-sectional schematic side view which exemplifies another process step of the method which adopted the apparatus of.

FIG. 3 is a schematic side view of a tube device provided with a balloon catheter and a plurality of dynamically operable electrodes according to another embodiment of the present invention.

FIG. 6 is a schematic side view illustrating that the distal electrode of a tube device is deployed in the lumen of a balloon catheter according to another embodiment of the present invention.

FIG. 8 is a partial cross-sectional side view illustrating a method of regulating renal nerve activity in a patient having various renal blood vessels using the tube device exemplified in FIG.

FIG. 8 is a partial cross-sectional side view illustrating a method of regulating renal nerve activity in a patient having various renal blood vessels using the tube device exemplified in FIG.

According to another embodiment of the present invention, it is a partial cross-sectional side view illustrating that a plurality of electrodes of the tube device are arranged along the shaft of the centering member and in line with the centering member.

Illustratively, another embodiment of the invention is configured to facilitate the directivity of the pulse output electric field by dynamically reducing the electrodes of the tube device to radial positions. It is a cross-sectional side view.

FIG. 3 is a partial cross-sectional side view illustrating that an injection / suction catheter is provided in a tube device according to another embodiment of the present invention.

FIG. 3 is a partial cross-sectional side view illustrating a method according to an embodiment of the present invention, in which a tube device having a structure in which an electrode is passed through at least a partial crossing of a blood vessel wall is used.

It is sectional drawing which was cut along the line AA of FIG. 23A.

It is sectional drawing which was cut along the line AA of FIG. 23A.

FIG. 3 is a partial cross-sectional side view illustrating that the tube device is provided with a detection device for measuring or monitoring the therapeutic effect according to another embodiment of the present invention.

FIG. 3 is a partial cross-sectional side view illustrating that the tube device is provided with a detection device for measuring or monitoring the therapeutic effect according to another embodiment of the present invention.

[0053]

Some embodiments of the present invention, if understood in connection with the accompanying drawings, will become clear when the detailed description of the latter part is considered, but in the attached drawings, the same reference numerals refer to the same components throughout. There is.

[0054]

< A .

Overview> The present invention relates to methods and devices for renal nerve regulation and / or other renal nerve regulation.

Aerin Exhibit 1011, Page 267 of 2183
Aerin Medical Inc. v. Neurent Medical Ltd.
IPR2025-01126

In particular, the present invention relates to methods and devices of renal nerve regulation that utilize pulsed output electric fields to perform electroporation or fusion.

As used in this case, electroporation and promotion of electrical permeation are methods of manipulating cell membranes or intracellular devices.

For example, a short high energy pulse opens a perforation in the cell membrane.

The degree of perforation of the cell membrane (eg, size and number of perforations) and duration of perforations (eg, temporary or permanent) can be determined by field strength, pulse width, duty cycle, field orientation, cell type, and it. It is a function of parameters other than.

In general, the perforation generally spontaneously closes when the weaker electric field and the shorter pulse terminate (defined in this case as "reversible electroporation").

Each cell type has a critical threshold, above which perforation does not close and perforation formation is irreversible, but such results are "irreversible electroporation", "irreversible breakdown", or. , Defined as "irreversible damage".

At this point, the cell membrane ruptures and / or an irreversible chemical imbalance caused by high porosity occurs.

Such high porosity may be the result of one large hole and / or a plurality of small holes.

A certain electroporation energy parameter that is also suitable for adoption in renal neural regulation is a high voltage pulse with a duration in the submicrosecond range (nanosecond pulse output electric field, ie nsPEF), thereby the cell membrane. Can alter the function of intracellular devices or cells in a manner that causes cell death or cell destruction while remaining intact.

It has already been illustrated that some applications of nanosecond pulsed output electric fields cause cell death by inducing self-destruction by apoptosis rather than acute cell death.

Also, the term "provided (as a component), provided, contained, composed of . ." is used throughout the case, but in enumerating the functional parts. It means that at least the listed functional parts are included without excluding the case where the number of the same functional parts is large and / or the case where another type of functional parts is added.

[0055]

Some embodiments of the invention include transluminal devices that induce renal nerve regulation such as transient changes in target nerves that disappear over time, continuous control of nerve function, and / or nerve ablation. offer.

The devices and methods described herein can utilize suitable signal or electric field parameters such as electric fields (any electric field) that achieve the desired neural regulation (eg, electroporation effect).

It is useful to understand the anatomy of the human kidney in order to better understand the structure of transluminal devices that utilize such neuromodulators and such methods.

[0056]

< B .

Careful selection of neural regulation method> Referring to FIG. 1, the kidney K of the human renal structure is supplied with blood oxygenated by the renal artery RA, and the renal artery is connected to the heart by the abdominal aortic artery AA. ing.

It exits the deoxidized blood or kidney and flows into the heart through the renal vein RV and the inferior vena cava IVC.

FIG. 2 illustrates in more detail a portion of the anatomy of the kidney

More specifically, the renal nerve RN of the renal structure extends longitudinally along the longitudinal dimension L of the renal artery RA, generally inside the adventitia of the artery.

The renal artery RA contains smooth muscle cell SMCs that surround the medial spiral of the artery around the angle axis θ of the artery, i.e , around the peripheral surface of the artery.

Thus, the longitudinal or longer dimension of the smooth muscle cells of the renal artery extends in a transverse direction (ie, not parallel) to the longitudinal dimension of the renal artery.

Misalignment of the long part of the renal nerve and the long part of the smooth muscle cell is defined as "cell misalignment".

Aerin Exhibit 1011, Page 268 of 2183
Aerin Medical Inc. v. Neurent Medical Ltd.
IPR2025-01126

[0057]

Referring to FIG. 3, by utilizing the cell misalignment of renal cells and smooth muscle cells, it is possible to selectively affect renal nerve cells while reducing the effect on smooth muscle cells.

More specifically, some embodiments of the electrodes of the present invention generate at least a portion of the electric field generated by the electrodes, as larger cells require less energy to exceed the irreversible threshold of electroporation. It is configured to align with the longer dimension of the affected cell, or roughly its long dimension.

In a particular embodiment, the electrodes of the transluminal device are configured to act on the renal nerve RN by creating an electric field that aligns with the long dimension of the renal artery RA or approximately the long dimension thereof. ing.

By aligning the electric fields so that the electric fields are preferentially applied in the long axis direction of the cells rather than in the radial direction of the cells, that is, in the radial direction, the electric field strength used to necrotize the cells can be reduced.

As mentioned above, this is expected to reduce power consumption and reduce the effect on non-target cells in the electric field.

[0058]

Similarly, the long or longer dimension of the tissue above or below the target nerve is perpendicular to the longitudinal dimension of the nerve cell or otherwise. , The axis is off (eg, in the transverse direction).

Thus, in addition to aligning the pulse output electric field with the long dimension or longer dimension of the target cell, the pulse output electric field propagates along the lateral dimension or shorter dimension of the non-target cell. (That is, the pulsed output electric field spreads at least partially misaligned with the non-target smooth muscle cell SMC).

Therefore, as can be seen in FIG. 3, by applying a pulse output electric field in a state where the propagation line Li is substantially aligned with the long dimension portion L of the renal artery RA, electric perforation, electric fusion, nerve removal, or nerve removal, or it is expected that while preferentially causing neural regulation other than the above in the cells of the target renal nerve RN, it does not adversely affect the smooth muscle cell SMC of the non-target artery.

The pulse output electric field may be spread in one plane along the long axis of the renal artery, or may be propagated in a long direction along an angle division θ ranging from 0 degrees to 360 degrees. .

[0059]

Embodiments of the method exemplified in FIG. 3 include a specific application example using the tube method and the tube device of the present invention.

For example, the long part of the electric field propagated by the pulse output electric field catheter installed in the renal artery extends along with the long part of the smooth muscle cell SMC of the arterial and blood vessel wall in the region of the renal nerve RN. It ensures that the walls of the arteries remain at least virtually intact, while at the same time destroying the outer nerve cells.

[0060]

< C .

Embodiments of Nerve Regulatory Systems and Other Nerve Regulatory Methods> FIG. 4 shows that one or more electrodes of a tube pulse output electric field device 200 according to the present invention physically contact a target region within a renal vessel to provide a vessel. An embodiment in which a pulse output electric field is applied across a wall is illustrated.

Although the device 200 is shown to be inside the patient's renal artery RA, the device may be placed at other intravascular sites (eg, renal veins).

Such an embodiment of the device 200 comprises a transluminal catheter 210, which is provided with a plurality of distal electrodes 212 of a proximal portion 211a, a distal portion 211b, and a distal portion 211b.

The proximal portion 211a usually has an electrode connector that connects the catheter 210 to the pulse generator, and the distal portion 211b of this embodiment has a spiral shape.

Aerin Exhibit 1011, Page 269 of 2183
Aerin Medical Inc. v. Neurent Medical Ltd.
IPR2025-01126

The device 200 is electrically connected to the pulse output electric field generator 100 installed outside the body proximal to the patient, and the electrode 212 is electrically connected to the electric field generator by the catheter 210.

The electric field generator 100 may be used in combination with any of the embodiments of the present invention that apply a pulse output electric field with desired electric field parameters, as described later.

It should be understood that the electrodes of the embodiments described below can be connected to the electric field generator, even if the electric field generator is not clearly illustrated or described for each variant.

[0061]

The spiral distal portion 211b of the catheter 210 is juxtaposed on the blood vessel wall so that the electrode 212 is very close to the extravascular neural structure.

By varying the pitch of the spirals, the treatment area can be extended, or by minimizing the circumferential overlap of adjacent treatment areas, stenosis formation can occur. We are trying to reduce the risk.

As a means of achieving this pitch variation, combining multiple catheters with different pitches, adjusting the pitch of the catheter 210 by using an internal tension wire, adjusting the mandrel inserted into the catheter, In addition to molding the sheath member to be placed over the sheath, there are suitable means for pitch fluctuation at the device installation position or before introduction into the body.

[0062]

The electrodes 212 along the long portion of the pitch may be a plurality of individual electrodes, one common partitioned electrode, or one common and continuous continuous electrode. It may be an electrode.

The one common seamlessly continuous electrode may be, for example, a conductive coil formed in the spiral portion of the catheter 210, or a conductive coil installed over the spiral portion.

One common compartmentalized electrode is provided, for example, by providing a tube with a slot that fits above or in the spiral of the catheter, or by electrical connection of a series of individual electrodes. It may be formed.

[0063]

The individual multiple electrodes or group of electrodes 212 may be configured to provide a bipolar signal, or all or partial groups of electrodes may be used together in conjunction with separate multiple grounds outside the patient's body. Thus, it may be attached to a monopolar use (eg, a ground pad may be attached to the patient's leg).

Electrodes 212 are dynamically allocated to facilitate monopolar and / or bipolar energy transfer between any of the electrodes and / or between any of the electrodes and the external ground. Can be done.

[0064]

The catheter 210 is delivered to the renal artery RA in a low profile transport configuration inside the sheath member 150.

Once placed in the artery, the catheter can be self-expanding, or it can be operably expanded by, for example, a pulling wire or a balloon, to contact the inner wall of the artery.

After that, a pulse output electric field is generated by the pulse output electric field generator 100, transmitted to the electrode 212 by the catheter 210, and further, an electric field is applied across the wall of the artery by the electrode 212.

In most applications, the electrode placement is set so that the pulse output electric field is aligned with the long dimension of the artery to regulate (eg, denervate) nerve activity along the renal nerve.

Means to achieve this include, for example, irreversible electroporation, electrical fusion, and / or induction of self-destruction by appointment in nerve cells.

[0065]

FIG. 5 illustrates a neuromodulator 220 according to another embodiment of the present invention.

Aerin Exhibit 1011, Page 270 of 2183
Aerin Medical Inc. v. Neurent Medical Ltd.
IPR2025-01126

The device 220 comprises a pair of catheters 222a and 222b, each of which has an expandable distal portion 223a, 223b provided with a spiral electrode 224a, 224b.

The spiral electrodes 224a and 224b are separated from each other by a desired distance inside the patient's renal blood vessels.

The electrodes 224a and 224b can be operated in a bipolar fashion such that one electrode is the active electrode and the other electrode is the feedback electrode.

The distance between the electrodes can be varied as desired to vary the electric field strength and / or the length of the nerve portion regulated by the electrodes.

The expandable spiral electrode has shape memory properties, which allow, for example, to facilitate self-expansion after being passed through the sheath member 150, or the electrode may be, for example. it can be operably expanded to contact the vessel wall by an inflatable balloon or by a pulling wire or the like.

The catheters 222a and 222b are preferably electrically insulated in regions other than the distal spiral of the electrodes 224a and 224b.

[0066]

FIG. 6 illustrates that the balloon catheter 232 of device 230 comprises an expandable balloon 234, a spiral electrode arranged around the balloon 234, and a shaft electrode 238 mounted on the shaft of the catheter 232. ing.

The shaft electrode 238 may be located proximal to the expandable balloon 234 as shown, or the shaft electrode 238 may be located distal to the expandable balloon 234

[0067]

When the device 230 is delivered, for example, to a target vessel inside the renal artery RA, the expandable balloon 234 and the helical electrode 236 are placed in a low profile transport shape.

As can be seen in FIG. 6, when the device is installed as desired, the expandable balloon 234 is inflated to drive the helical electrode 236 into physical contact with the wall of the blood vessel.

In this embodiment, the shaft electrode 238 does not physically contact the vessel wall.

[0068]

In both conventional thermal high frequency energy transfer techniques and relatively non-thermal pulse output high frequency energy transfer techniques, energy is transmitted from a distance from the tissue itself to transfer energy to the tissue to be treated. It is well known to do.

Therefore, "nerve contact" may include physical contact of a system element in addition to contact that lacks physical contact only by electrical contact, or may include contact that is a combination of these two types of contact. I understand.

Optionally, a centering member may be provided to position the electrode in the central region of the blood vessel.

The centering member includes, for example, an expandable balloon such as the balloon 234 of the device 230 and an expandable basket member described later.

One piece, either aligned with the centering member in the longitudinal direction, as is the case with the shaft electrode 238 of the device 230, or installed on one or both sides of the centering member. The above electrodes can be installed on the central shaft of the centering member

When a balloon catheter such as the catheter 232 is used, the inflated balloon acts as an insulator with increased impedance, allowing the pulse output electric field to be directional along the desired electrical flow path. ..

Obviously, various insulating members may be used instead.

[0069]

Aerin Exhibit 1011, Page 271 of 2183
Aerin Medical Inc. v. Neurent Medical Ltd.
IPR2025-01126

As can be seen in FIG. 6, when the spiral electrode 236 physically contacts the wall of the renal artery RA, the electric field generator 100 generates a pulse output electric field between the spiral electrode 236 and the shaft electrode 238 in a bipolar fashion. It will pass an electric current.

The pulse output electric field travels between the electrodes along the line Li, which usually extends along the long dimension of the artery.

The balloon 234 is locally insulated and / or locally increases the impedance in the patient's blood vessel so that the pulse output electric field travels through the vessel wall between the spiral electrode and the shaft electrode.

This gives directionality to the energy, for example, irreversible electroporation results in improved denervation of the patient's renal nerves and / or other nerve regulation.

[0070]

FIG. 7 illustrates an apparatus 240 similar to the apparatus illustrated in FIGS. 4-6, according to another embodiment of the invention.

The balloon catheter 242 of the device 240 is provided with an expandable balloon 244 and a shaft electrode 246 located proximal to the balloon.

The expandable spiral electrode 248 of the device 240 is shaped to be conveyed through the guidewire lumen 243 of the catheter 242.

The spiral electrode 248 exemplified in FIG. 7 is a self-expanding type.

[0071]

As can be seen in FIG. 7, after the catheter 242 is placed in the target vessel (eg, renal artery RA), the balloon 244 contacts the wall of the vessel and holds the shaft electrode 246 at the desired site within the vessel to hold the vessel. It is inflated until it insulates the inside of the blood vessel or increases the impedance inside the blood vessel.

The balloon 244 is generally configured to center the shaft electrode 246 within the vessel, or to separate the shaft electrode from the vessel wall by a desired distance otherwise.

After inflating the balloon 244, the helical electrode 248 is pushed through the lumen 243 until it overhangs the catheter shaft, after which the electrode 248 dilates, otherwise the vessel wall. It is transferred to a spiral shape that makes physical contact with the.

A bipolar pulse output electric field is applied along the line Li between the spiral electrode 248 and the shaft electrode 246.

For example, the spiral electrode 248 may be provided with an active electrode and the shaft electrode 246 may be provided with a feedback electrode, or vice versa.

[0072]

Here, with reference to FIG. 8, a device having a plurality of electrodes and having an expandable basket capable of contacting the blood vessel wall in the expanded state will be described.

The device 250 comprises a catheter 252 having an expandable distal basket 254 formed from a plurality of peripheral struts or peripheral members.

The plurality of electrodes 256 are formed along the members of the basket 254.

It is exemplified that each member of the basket comprises a pair of bipolar electrodes shaped to contact the wall of the renal artery RA or any other desired vessel wall.

[0073]

The basket 254 can be made from a plurality of shape memory wires or shape memory ribbons forming the basket member 253, such as, for example, nitinol, spring steel, elgiloy wire, or ribbon.

Aerin Exhibit 1011, Page 272 of 2183
Aerin Medical Inc. v. Neurent Medical Ltd.
IPR2025-01126

If the basket member contains a ribbon, the ribbon can be moved so that the surface area in contact with the vessel wall is increased.

The basket member 253 is connected to the catheter 252 at the respective positions of the proximal connecting member 255a and the distal connecting member 255b.

In such a shape, the basket can be folded so that it can be carried inside the sheath member 150, and when removed from the sheath member, it self-expands and contacts the wall of the artery. be able to.

Optionally, the proximal connection member 255a and / or the distal connection member 255b is configured to be translated along the shaft of the catheter 252 over a specific or unspecified distance to facilitate expansion and contraction of the basket. You may plan as follows.

[0074]

As an alternative example, the basket 254 may be slotted and / or formed from laser-cut hypotubes.

In such a configuration, the catheter 252 may include, for example, an inner shaft and an outer shaft that are movable in correlation with each other.

The distal connecting member 255b of the basket 254 can be connected to the inner shaft and the proximal connecting member 255a of the basket can be connected to the outer shaft.

By bringing the inner and outer shafts of the catheter 252 closer together, the proximal connecting member 255a and the distal connecting member 255b of the basket are brought closer to expand the basket, and the basket 254 has a folded transport shape in FIG. It can be expanded to the deployment shape.

Similarly, the basket can be retracted by separating the inner and outer shafts of the catheter.

[0075]

As can be seen in FIG. 9, the individual electrodes are arranged along the basket stanchions or basket member 253.

In one embodiment, the stanchion is formed of a conductive material coated with a dielectric material, and the electrode 256 is formed by removing a region of the dielectric film.

Optionally, the insulating material may be removed only along the radial outer surface of the member so that the electrodes 256 remain insulating on their respective radial inner surfaces, thereby allowing current flow. It is expected that the radiant current will be turned outward and passed through the wall of the blood vessel.

[0076]

In addition to, or as an alternative to, the manufacturing technique of FIG. 9, the electrodes may be attached to the inner or outer surface of the stanchions or members of the basket 254, or may be embedded in those stanchions or members. good.

The electrodes installed along each of the stanchions or members may be provided with multiple individual electrodes, one common partitioned electrode, or one. A common continuous electrode without a break may be provided.

The individual multiple electrodes or group of electrodes may be configured to provide a bipolar signal, or monopolar use by operating all or some of the electrodes together with grounding outside the patient's body. May be attached to.

[0077]

One of the advantages of contacting the electrode 256 with the vessel wall as exemplified in the embodiment of FIG. 8 is to reduce the need for an insulating member such as an expandable balloon to remove the renal nerve or it. Achievement of neuromodulation other than.

However, it should be understood that such insulating members may be provided, for example, to be expanded in a basket.

In addition, contact of the electrodes with the vessel wall can improve the geometry of the electric field, i.e., better alignment with the long axis of the vessel to provide the electric field.

Aerin Exhibit 1011, Page 273 of 2183
Aerin Medical Inc. v. Neurent Medical Ltd.
IPR2025-01126

Such contact electrodes can promote stimulation of the renal nerve before, during, or after nerve regulation and improve the positioning of the catheter 252 prior to treatment, or the effectiveness of treatment. It also allows you to monitor.

[0078]

In a modification of the device 250, the electrode 256 is placed along the central shaft of the catheter 252, and the basket 254 simply positions the electrode in the center of the vessel to carry energy across the vessel wall. It can be done more accurately.

This configuration is indeed suitable for more accurate targeting of vascular or extravascular tissues such as renal nerves surrounding the renal arteries.

Accurately sizing the basket or other anti-arterial centering member provides a known distance between the centered electrode and the arterial wall and utilizes it as desired. The electric field can be directed and / or the electric field can be focused as per.

Such configurations can be utilized in high intensity directional ultrasound or microwave applications, but may be optionally adapted for use in combination with other energy physiotherapy.

[0079]

Now referring to FIG. 10, it is expected that the electrodes forming the marginal contacts with the wall of the renal artery provide for more complete renal denervation or renal regulation.

FIG. 10 illustrates a modification of the present invention provided with a ring electrode.

The catheter 262 of the device 260 is provided with expandable ring electrodes 264a, 264b configured to contact the wall of the blood vessel.

These electrodes can be attached to the shaft of the catheter 262 via the struts 266, and the catheter 262 is configured to be transported through the sheath member 150 to the renal artery RA in a low profile shape.

The stanchion 266 may be self-expanding, or may be actuated or mechanically expanded.

The catheter 262 includes a guidewire lumen 263 to advance over the guidewire.

Catheter 262 also comprises an optional inflatable balloon 268, which acts as an impedance-increased insulating element, a current traveling across the arterial wall between electrodes 264 and 264. Can be given priority to the directionality.

[0080]

11A through 11C illustrate various winding electrodes for the ring electrode 264.

As shown, the ring electrode may be, for example, coiled (left in FIG. 11), zigzag (middle in FIG. 11), or meandering (right in FIG. 11).

The periodicity of the winding may be specified as desired.

Further, the type of winding, that is, the periodicity and the like may vary along the peripheral edge of the electrode.

[0081]

With reference to FIG. 12, a modification of the device 260 is illustrated, and the ring electrode 264'of the device is a sinusoidal winding in the form of the meandering winding illustrated in FIG. 11C.

The stanchion 266 is exemplified to be attached to each vertex of a sinusoidal waveform.

The winding of the electrode 264'provides a larger contact area along the vessel wall than the contact area provided by the electrode 264, yet allows the device 260 to be easily housed inside the sheath member 150 for transport and recovery purposes. I am trying to do it.

[0082]

FIG. 13 illustrates another variant of the device 260 comprising a proximal ring electrode 264a, further the distal electrode 270 of the device is in the guide wire lumen 263 of the catheter 262. Further exemplifying that it is being transported.

Aerin Exhibit 1011, Page 274 of 2183
Aerin Medical Inc. v. Neurent Medical Ltd.
IPR2025-01126

The distal electrode 270 is non-expandable and is centrally positioned within the blood vessel by the catheter 262.

The distal electrode 270 may be a standard guide wire connected to a pulse output electric field generator and used as an electrode.

However, as an alternative example, it should be understood that the electrode 270 may be configured to expand into contact with the vessel wall and may include, for example, a ring electrode or a spiral electrode. Is.

[0083]

By transporting the distal electrode through the lumen of the catheter 262, the transport profile of the device 260 can be reduced and / or the flexibility of the device can be increased.

In addition, transporting the distal electrode through the guide wire lumen is a safety feature that ensures that the guide wire located inside the lumen 263 is removed by the healthcare professional before applying a pulsed output electric field. It works.

This not only allows the treatment period to be individually set for each patient, but also allows treatment within the collateral vascular bifurcation, as described below.

[0084]

The ring electrodes 264, 264'may optionally be electrically insulated along their respective radial inner surfaces, while their respective radial outer surfaces in contact with the vessel wall may be exposed to electricity.

This can reduce the risk of thrombus formation and improve or improve the directivity of the electric field along the long axis of the blood vessel.

This can also help reduce the electric field pressure required to rupture the nerve fibers.

Materials and specific examples used to insulate the ring electrode at least partially include polytetrafluoroethylene (PTFE), stretched polytetrafluoroethylene (ePTFE), fluorinated ethylene propylene (FEP), chloroprene, silicone, etc. There are urethane, Pebax, etc

Referring to FIG. 14, another modification of the apparatus 260 is illustrated, in which the ring electrode is replaced by a point electrode 272 and is located at each end of the strut 266.

The point electrode can be folded together with the strut to carry through the sheath member 150 and can self-expand with the strut to contact the vessel wall.

FIG. 14 illustrates that the catheter 262 is provided with four point electrodes 272 on both sides of the balloon 268.

However, it should be understood that any number of struts and point electrodes may be provided near the periphery of the catheter 262 if desired.

[0085]

In FIG. 14, it is exemplified that the device 260 is provided with four columns 266 and four point electrodes 272 on both sides of the balloon 268.

The electric field propagates along the line by using all the distally arranged electrodes 272b as active electrodes and using all the proximal electrodes 272a as feedback electrodes or vice versa. The line Li can be aligned with the long axis of the blood vessel.

The extent to which the line Li overlaps along the axis of rotation of the blood vessel is specified not only by specifying the parameters of the pulse output electric field, but also by specifying the angle setting and density of the point electrode 272 around the periphery of the catheter. be able to.

[0086]

Here, another modification of the tube pulse output electric field catheter will be described with reference to FIG.

Aerin Exhibit 1011, Page 275 of 2183
Aerin Medical Inc. v. Neurent Medical Ltd.
IPR2025-01126

The catheter 282 of the device 280 is provided with any inflatable balloon or centering member 284 and shaft electrodes 286a, 286b arranged on both sides of the balloon along the shaft of the catheter, as well as of the catheter. Arranged along the shaft and provided with any radiopaque marker 288 exemplified to line up with the balloon.

As described above, the balloon 284 serves both as a centering member for the electrode 286 and as an electrically insulating member having directivity in the electric field.

[0087]

The device 280 is particularly suitable for achieving accurate targeting of the desired artery or extraarterial tissue, which is a centered electrode 286 by appropriately sizing the balloon 284 with respect to the target artery. This distance can be used to specify the parameters of the pulse output electric field, because there can be a known distance between the and the arterial wall.

As an alternative example, the electrode 286 is attached to the balloon 284 rather than the central shaft of the catheter, in which case the electrode is attached so as to contact the wall of the artery.

In such a modification, the electrodes may be attached to the inner surface of the wall of the balloon, attached to the outer surface, or embedded in the wall of the balloon.

[0088]

The electrodes 286 arranged along the length of the catheter 282 may be multiple individual electrodes, one common partitioned electrode, or one common seamlessly continuous electrode. There may be.

Further, the electrode 286 may be configured to provide a bipolar signal, or the electrode 286 may be used in a monopolar manner in conjunction with a separate patient's extracorporeal ground, either together or individually. It can also be attached to.

[0089]

Here, with reference to FIG. 16, a method of achieving renal nerve removal using the device 280 will be described.

As can be seen in FIG. 16A, the catheter 282 can be placed at a desired site within the renal artery RA, and the balloon or centering member 284 is expanded to place the electrode 286 in a central position and optionally electrical. Insulation can be applied and the pulsed output electric field can be applied, for example, between the proximal electrode 286a and the distal electrode 286b in a bipolar fashion.

The pulsed output field is expected to achieve renal denervation and / or renal nerve regulation along treatment area 1T1.

If it is desirable to regulate neural activity at another site of the renal artery, the balloon 284 may be at least partially dilated, and the catheter may be a second desired treatment area, as shown in FIG. 16B. It may be installed in T2.

Healthcare professionals can optionally utilize fluoroscopic imaging of the radiodensity marker 288 to orient and treat catheter 282 at the desired site.

For example, a healthcare professional can use a marker to secure an overlapping region O between treatment areas T1 and treatment area T2, as shown.

[0090]

With reference to FIG. 17, a modified example of the device 280 in which a plurality of dynamically controllable electrodes 286 are arranged on the proximal side of the balloon 284 will be described.

In one variant, one of the proximal electrodes 286a is energized with the distal electrode 286b in a bipolar fashion to dynamically control the long axis distance between the active and feedback electrodes.

This changes the dimensions and shape of the treatment area.

In yet another variant, any of some of the proximal electrode groups 286a can be energized together as an active or feedback electrode for a bipolar electric field established between the proximal electrode 286a and the distal electrode 286b. can.

[0091]

Aerin Exhibit 1011, Page 276 of 2183
Aerin Medical Inc. v. Neurent Medical Ltd.
IPR2025-01126

Although the device 280 illustrated in FIG. 17 comprises three proximal electrodes 286a, the device 280 may have any number of proximal electrodes instead of this number.

Further, the device 280 may have a plurality of distal electrodes 286b in addition to or in place of the plurality of proximal electrodes.

Further, one of the pair of electrodes may be connected to the catheter 282 and the other electrode may be transported through the lumen of the catheter, for example, through the lumen of the guidewire.

The catheter and the electrodes transported by tube can be reduced in position in a correlation with each other to change the separation distance between the electrodes.

Such variants also facilitate the treatment of diverse renal vascular anatomy.

[0092]

In the modification of the device 280 described so far, the distal electrode 286b is connected to the shaft of the catheter 282 distal to the balloon 284.

The distal electrode utilizes the lumen inside the catheter 282 and can, for example, route a lead wire that acts as a ground.

In addition, a portion of the catheter 282 distal to the balloon 284 is long enough to accommodate the distal electrode.

[0093]

All of the catheters are commonly made of metal and / or carried over conductive guide wires.

Many interventional treatments involving catheters do not remove the guidewire during treatment.

Since the device 280 is configured to apply a pulsed output electric field, if the guidewire is removed, there is a risk of giving an electric shock to a person who comes into contact with the guidewire during energy propagation

Such danger can be reduced by using a polymer-coated guide wire.

[0094]

Although another modification of the device 280 will be described with reference to FIG. 18, in this case the distal electrodes 286b of FIGS. 16 and 17 move through the lumen of the catheter as previously described with respect to FIG. It has been replaced with a distal electrode 270 configured to allow it to be made.

Obviously, as an alternative example, the proximal electrode 286a may be replaced with a tube-carried electrode so that the electrode 286b and the electrode 270 form a bipolar electrode pair.

The electrode 270 does not utilize another lumen inside the catheter 282, which can reduce the profile.

Furthermore, the length of the catheter distal to the balloon need not provide a length corresponding to the length of the distal electrode, which can improve flexibility.

In addition, the guide wire must be replaced with the electrode 270 prior to treatment, which reduces the risk of accidental electric shock.

In one variant, the electrode 270 can optionally be used as a guide wire, but the guide wire is replaced with an electrode by propagating the catheter 282 over the guide wire before applying a pulse output electric field. Eliminate the need.

As an alternative to this, it is only necessary to connect the standard guidewire to the pulse output electric field generator so that the standard metal guidewire can be used as the electrode 270.

The distal electrode 270 can be extended by a desired distance beyond the distal end of the catheter 282.

This makes it possible to dynamically change the length of the treatment area.

In addition, this can facilitate treatment within the distal vessel with reduced diameter.

[0095]

Aerin Exhibit 1011, Page 277 of 2183
Aerin Medical Inc. v. Neurent Medical Ltd.
IPR2025-01126

Referring to FIG. 19, treatment is performed inside one or more collateral vascular branches extending from major vessels, specifically inside a branch of the renal artery near the hilar of the kidney. May be desirable.

In addition, it may be desirable to perform treatment within an abnormal or unusual branch of the renal blood vessels that is found in only a few patients.

As can be seen in FIG. 19A, the distal electrode 270 can be placed in the above-mentioned bifurcation of the renal artery RA, while the catheter 282 is placed in the main bifurcation of the artery.

As can be seen in FIG. 19B, a large number of distal electrodes 270 are provided and placed in various normal or unusual branches of the renal artery, but the catheter remains within the main arterial branch.

[0096]

Another modification of the tube pulse output electric field catheter will be described with reference to FIG

The catheter 292 of the device 290 is provided with a plurality of shaft electrodes 294 arranged in a row with the centering member 296.

It is exemplified that the centering member 296 includes an expandable basket such as the expandable basket 254 already described in FIG.

However, as an alternative, it should be understood that the centering blocker may be equipped with a balloon or any other centering member.

Electrodes 294 may be utilized in either bipolar or monopolar fashion.

[0097]

Here, another modification of the present invention will be described with reference to FIG. 21, but the electrodes of this device are such that the positions of one or more electrodes are dynamically adjusted in the radial direction in correlation with the blood vessel wall. The configuration makes it possible to easily give directivity to the pulse output electric field applied by the electrodes.

The catheter 302 of the device 300 is provided with an expandable member and electrodes arranged in a row.

The nested expandable member has an inner expandable member 306 and an outer expandable centering member 308.

The electrodes 304 are located along the medial expandable member, while the outer expandable centering member is centrally located within the vessel and configured to stabilize the catheter 302.

The inner expandable member 306 can dynamically change the radial position of the electrode 304 by varying and expanding to different degrees as desired by the healthcare professional.

This dynamic radial position reduction can be used to direct the energy propagated by the electrodes 304 as it propagates to the target tissue.

[0098]

Nested members 306, 308 are arranged with another balloon in the balloon, another basket in the basket, some combination of the balloon and the basket, or other extensions. Take possible nested arrangements.

In FIG. 21, the inner expandable member 306 is exemplified to include an expandable basket, and the outer expandable centering member 308 is exemplified to include an expandable balloon.

The electrode 302 is installed along the surface of the inner balloon 306.

[0099]

Any of the modifications of the invention described in this case may optionally be configured such that the drug can be injected into the therapeutic area before, during, or after energy donation, for example. It can enhance or alter the neurodestructive or regulatory effects of energy, protect or temporarily displace non-target cells, and / or facilitate visualization.

It can also be understood that the infused drug is additionally administered.

Aerin Exhibit 1011, Page 278 of 2183
Aerin Medical Inc. v. Neurent Medical Ltd.
IPR2025-01126

If desired, reversible electroporation of cells in which the infusion agent is present can improve the cellular uptake of the infusion agent.

Injection is particularly desirable when a balloon centering member is used.

Examples of the injectable agent include physiological saline, heparin-administered saline, protective agents such as Poloxamer-188, and growth inhibitors.

In addition to this, or as an alternative example, the modification of the present invention may be configured to suck.

For example, an injection port or inlet may be provided on the catheter shaft adjacent to the centering device, the centering device may be perforated (eg, a "weeping" balloon, etc.), or The stanchions of the basket may be made from hollow hypotubes and provided with slots or perforations to allow injection or suction.

[0100]

A variant of the invention comprising a pulse output electric field catheter for injection / suction will be described with reference to FIG.

The catheter 312 of the device 310 is provided with a proximal inflatable balloon 314a and a distal inflatable balloon 314b, respectively.

A proximal shaft electrode 316 is located between the two balloons along the shaft of the catheter 312, and a distal electrode 316b is located along the catheter shaft distal to both balloons.

One or more injection or suction holes 318 are located in close proximity to the proximal electrode 316a between the balloons along the shaft of the catheter 312.

[0101]

The device 310 can be used in a variety of ways.

In the first use, the catheter 312 is placed at the desired site within the target vessel, such as the renal artery RA.

After one or both of the balloons 314 are inflated, a protective agent or other injecting agent is injected between the two balloons through a hole (s) 318 located close to the electrode 316a.

A pulsed output electric field suitable for performing reversible electroporation is applied across the electrode 316 to facilitate ingestion of the infusion by non-target cells inside the vessel wall.

As a means of improving the transport of the protective agent, first the distal balloon 314b is inflated, then the protective agent for evacuating blood is injected, and then the proximal balloon 314a is inflated.

[0102]

Optionally, the residual injectant may be aspirated to make the injectant unavailable during subsequent pulse output field application when irreversible electroporation of nerve cells is initiated.

Suction can be achieved by at least partially contracting only one balloon during suction.

As an alternative example, suction may be achieved with both balloons inflated, for example, by injecting saline in conjunction with suction to flush the vessel portion between the inflated balloons. Will be implemented.

Such blood washing can reduce the risk of blood clots forming along the proximal electrode 316a during pulsed output electric field application.

In addition, cleaning can be performed during energy delivery to cool the electrodes and / or cool the cells of the arterial wall.

Such lowering of the temperature of the arterial parietal cells makes it possible to protect the cells from damage caused by irreversible electroporation and reduce the need for injection of a protective agent.

[0103]

Aerin Exhibit 1011, Page 279 of 2183
Aerin Medical Inc. v. Neurent Medical Ltd.
IPR2025-01126

After injection and voluntary aspiration, a pulsed output electric field suitable for initiating irreversible electroporation into target neurons is applied across the electrode 316 to perform denervation or to regulate neural activity. Can be done.

In an alternative method, protective agent infusion may be performed during or after the initiation of irreversible electroporation to protect non-target cells.

The protective agent can block the perforations formed in non-target cells, i.e. fill the voids, by, for example, irreversible electroporation.

[0104]

An alternative method is to simultaneously inject a cold (ie, cooler than body temperature) heparin-administered saline solution, aspirate between the inflated balloons, clean the area between the balloons, and clean the vessel wall. The sensitivity of cells to electroporation can be reduced.

This is expected to further protect the cells while applying a pulse output electric field suitable for initiating irreversible electroporation.

Such cleaning may optionally be performed intermittently from the beginning to the end of the pulse output electric field supply.

Optionally, a thermocouple or other temperature sensor may be placed between the balloons to allow the desired temperature to be maintained while adjusting the infusion rate of the cold injectate.

It is preferable that the cold injectable agent does not cool the target tissue such as kidney nerve.

Protective agents such as poloxamer 188 are optional and may be infused after treatment as a further safety measure.

[0105]

As an alternative example, injection may be achieved with a weeping balloon catheter.

Furthermore, a cold balloon catheter provided with at least one electrode can be utilized.

A cold balloon is inflated inside the vessel to locally reduce the temperature of the vessel, for example, to protect it while applying an electric field and / or to cause thermal apoptosis of the vessel wall. It can be attempted to trigger.

Specific examples of the electric field include a pulse output electric field or a thermal electric field that is not a pulse output type such as a thermal high frequency electric field.

[0106]

Here, with reference to FIG. 23, a modified example of a pulse output catheter configured to pass an electrode (s) across a blood vessel at least partially will be described.

For example, by placing the electrode (s) inside the renal vein and then passing the electrode across the wall of the renal vein, the gelota myocardium, or at least a portion of the renal myocardium, near the renal artery. It can be arranged so as to surround the renal artery.

In such an embodiment, the electrodes (s) can be placed very close to the target renal nerve fibers before the pulse output electric field is applied.

[0107]

As can be seen in FIG. 23A, the catheter 322 of the device 320 is provided with a needle port 324 and a centering member 326 exemplified as an inflatable balloon in the figure.

The catheter 322 may also optionally be provided with a radiodensity marker 328.

The needle port 324 has a structure that allows the needle 330 to pass through the needle port 324, but the needle 330 has a structure that allows the electrode 340 to pass through the needle port 324.

[0108]

Aerin Exhibit 1011, Page 280 of 2183
Aerin Medical Inc. v. Neurent Medical Ltd.
IPR2025-01126

The renal vein RV extends parallel to the renal artery RA.

Imaging physics such as tube ultrasound can be used to identify the location of the renal arteries with respect to the renal veins.

For example, optionally, the transluminal ultrasound member may be integrated within the catheter 322.

The catheter 322 can be placed inside the renal vein RV and inflate the centering member 326 to stabilize the intravenous catheter using well-known percutaneous techniques.

Subsequently, the needle 330 is passed through the catheter 322 and exited from the needle port 324, in such a manner that the needle penetrates the wall of the renal vein and enters the gelota fascia, that is, the renal fascia F. ..

The radiodensity marker 328 is visualized by fluoroscopy and the needle port 324 can be properly oriented prior to deployment of the needle 330.

[0109]

Electrodes 340 are deployed through the needle 330 to at least partially surround the renal artery RA, as shown in FIGS. 23A and 23B.

By continuously advancing the electrode, it is possible to further surround the artery, as illustrated in FIG. 23C.

With the electrodes deployed, stimulation waveforms and / or pulse output electric field electroporation waveforms are applied to denervate or regulate renal nerves.

The needle 330 is optionally retracted in part or in whole prior to treatment, so that the electrode 340 surrounds a portion of the renal artery more extensively.

[0110]

Optionally, the injection agent is injected into the fascia F from the needle 330 to provide a space for installing the electrode, whereby the installation of the electrode 340 can be facilitated.

The injectable can be, for example, a fluid, a heated liquid, a chilled liquid, air, carbon dioxide, a physiological saline solution, a contrast agent, a gel, a conductive liquid, or any other material that can occupy a space, whether it is a gas or a solid. Includes liquids or any material.

Heparin-administered saline may be infused.

Saline or highly osmotic saline can improve the conductivity between both electrodes 340.

In addition to, or as an alternative to this, the drug and / or the drug carrier may be injected or placed into the fascia through the needle.

[0111]

After treatment, the electrode 340 is retracted into the needle 330 and the needle 330 can be retracted into the catheter 322 via the needle port 324.

The needle 330 is preferably thin enough to minimize the occurrence of bleeding and to achieve hemostasis fairly quickly.

Optionally, the balloon-shaped centering member 326 may remain inflated for some time after the needle 330 is collected to block blood flow and promote the blood coagulation process.

As an alternative, the balloon catheter may be inserted into the renal vein and inflated after removal of the device 320.

[0112]

A modification of the present invention provided with a detection device or other member for measuring or monitoring the therapeutic effect will be described with reference to FIG. 24.

Modifications of the invention may be configured to apply a stimulating electric field in addition to denervation or regulation of the pulse output electric field.

Aerin Exhibit 1011, Page 281 of 2183
Aerin Medical Inc. v. Neurent Medical Ltd.
IPR2025-01126

Such a stimulating electric field can be used to properly install the treatment device and / or monitor the effect of treatment in regulating neural activity.

This is achieved by monitoring the response of physiological parameters known to have an effect by stimulating the renal nerves.

Specific examples of such parameters include renin levels, sodium levels, renal blood flow, blood pressure and the like.

Stimulation can also be used to examine nerve removal to monitor therapeutic effects.

That is, with denervation of the renal nerve, a pre-known physiological response to a stimulus no longer occurs as a response to such a stimulus.

[0113]

The efferent nerve stimulation waveform contains, for example, frequencies from about 1 Hz to 10 Hz, while the afferent nerve stimulation waveform contains, for example, frequencies up to about 50 Hz.

Waveform amplitudes range, for example, up to about 50 V, and pulse durations range, for example, up to about 20 ms.

As in some embodiments of the invention, when the nerve stimulation waveform is transvased, it is directed towards the target nerve by adjusting electrolytic parameters such as frequency, amplitude, pulse duration, etc. It is easy to transmit the waveform through the wall of the blood vessel to carry it.

Furthermore, although the specific parameters of the stimulus waveform have been described, it should be understood that alternative parameters may be used as desired.

[0114]

Electrodes used to apply a pulsed output electric field in any of the aforementioned variants of the invention may be utilized to propagate the stimulus waveform to the renal blood vessels.

Alternatively, the variant may be equipped with a stimulating offensive independent electrode.

As another alternative, a separate stimulator may be provided.

[0115]

One way to use stimulation to identify renal nerves is to stimulate the nerves to affect renal blood flow, ie if the renal nerves are not denervated or are regulated. If not, it is to stimulate the nerves to affect the renal blood flow.

Stimulation acts to reduce renal blood flow, and such reactions are diminished or eliminated with nerve depletion.

Therefore, it is expected that blood flow will decrease if stimulation is given before nerve regulation, but if the same stimulation site is used with the same stimulation parameters as before nerve stimulation, it is the same even if stimulation is given after nerve regulation. It cannot be expected that blood flow will be reduced to some extent.

Such a phenomenon can be used to quantify the degree of renal nerve regulation.

Modifications of the invention may include a member that monitors renal blood flow or a member that monitors any of the other physiological parameters known to be affected by renal stimulation. ..

[0116]

FIG. 24A exemplifies a modified example of the device 280 provided with a member for monitoring renal blood flow in FIG. 16.

A guide wire 350 equipped with a Doppler ultrasonic sensor 352 was advanced through the lumen of the catheter 282 to monitor blood flow inside the renal artery RA.

The Doppler ultrasonic sensor 352 is configured to measure the velocity of blood flow through an artery.

The flow rate can then be calculated according to the following formula:

Q = VA (1) In this case, Q is equal to the flow rate, V is equal to the flow velocity, and A is equal to the cross-sectional area.

Aerin Exhibit 1011, Page 282 of 2183
Aerin Medical Inc. v. Neurent Medical Ltd.
IPR2025-01126

The criteria for renal blood flow can be determined by measurements from the sensor 352 prior to propagation of the stimulus waveform, the stimulus being transmitted between the electrodes 286, preferably with the balloon 284 contracted.

By monitoring the variation from the standard of renal blood flow, that is, the lack of blood flow, using the sensor 352, the optimum site of nerve stimulation and / or nerve removal of the renal nerve can be identified.

[0117]

FIG. 24B illustrates a modification of the device of FIG. 24A, where the Doppler ultrasonic sensor 352 is connected to the shaft of the catheter 282.

Although the sensor 352 is exemplified as being located proximal to the balloon 284, it should be understood that, as an alternative example, the sensor may be located distal to the balloon.

[0118]

In addition to, or as an alternative to, tube monitoring of renal blood flow by Doppler ultrasound, such monitoring may optionally be performed from outside the patient's body, thereby renal blood flow. is visible through the skin (eg, utilizing an ultrasonic converter).

In yet another variant, one or more tube pressure converters may be used to detect local pressure changes that indicate renal blood flow.

As another alternative example, in determining the blood flow velocity, for example, even if it is carried out by a temperature dilution method by measuring the time delay in which the tube temperature input changes between two points whose separation distance is known in advance. good.

[0119]

For example, a thermocouple is incorporated into or proximal to each electrode 286 and a cold (ie, below body temperature) fluid or saline is injected proximally to both thermocouples.

The flow characteristics can be quantified by utilizing the time delay in which the temperature decrease is transmitted between the thermocouples.

A reference estimate of the flow characteristic (s) of interest may be determined prior to stimulating the renal nerve and compared to a second estimate of the characteristic determined after stimulation.

[0120]

Optionally, treatment may be monitored using devices available on the market.

Specific examples of such devices include Volcano Therapeutics Inc. of Rancho Cordova, California, USA.

), SmartWire (trademark) equipment, FloWire (trademark) equipment, and WaveWire (trademark) equipment, as well as from RADIUS Medical Systems AB in Uppsala, Sweden. There is a PressureWire (trademark) available.

Other than these, there are clear devices available on the market.

In addition to or in place of the above, in monitoring the degree of electrical perforation, electrical impedance tomography (EIT) or other electrical impedance measurement methods, such as the electrical impedance index, may be used. It may be monitored directly.

[0121]

Although the preferred specific modifications of the present invention have been described above, it is clear to those skilled in the art that various changes and modifications can be made to these modifications without departing from the present invention.

For example, although these modifications have mainly described applications linked to the pulse output electric field, it should be understood that other electric fields can be applied as desired.

Aerin Exhibit 1011, Page 283 of 2183
Aerin Medical Inc. v. Neurent Medical Ltd.
IPR2025-01126

All of these modifications and modifications that fall within the true spirit and scope of the invention should be construed as included in the appended claims.

Aerin Exhibit 1011, Page 284 of 2183
Aerin Medical Inc. v. Neurent Medical Ltd.
IPR2025-01126

Patent Translate
Powered by EPO and Google

Notice

This translation is machine-generated. It cannot be guaranteed that it is intelligible, accurate, complete, reliable or fit for specific purposes. Critical decisions, such as commercially relevant or financial decisions, should not be based on machine-translation output.

CLAIMS JP2012143573A

1.

A renal neuromodulator, the device is a catheter configured to be tube-mounted within the renal blood vessels of a subject and is an expandable distal body made up of multiple struts or members. A plurality of electrodes having a catheter provided with a basket, further arranged along the struts or members of the basket, and suitable for placement in contact with the wall of a renal vessel. The device is configured to apply a renal catheter by supplying an electric field to the target renal nerve across the wall of the renal blood vessel.

2.

The device of claim 1, wherein the expandable distal basket is manufactured from a plurality of shape storage wires or shape storage ribbons.

3.

The device of claim 2, wherein the stanchion or member of the basket is connected to the catheter at the proximal and distal connecting members.

4.

Claimed, the basket is contracted and transported to the renal blood vessel in a state of being contained in the sheath member, and the basket is configured to self-expand and come into contact with the wall of the renal blood vessel when it is taken out from the sheath member. The device according to any one of 1 to 3.

5.

The proximal connecting member, the distal connecting member, or both connecting members can be translated along the shaft of the catheter over a specific distance or an unspecified distance to facilitate expansion and contraction of the basket. The device according to any one of claims 1 to 3, which is configured to be the same.

6.

The device of claim 1, wherein the expandable basket is formed from a hypotube provided with a slot, a laser-cut hypotube, or both hypotubes.

7.

Aerin Exhibit 1011, Page 285 of 2183
Aerin Medical Inc. v. Neurent Medical Ltd.
IPR2025-01126

The stanchions or members of the basket were connected to the catheter at the proximal and distal connecting members, and the catheter was connected to the inner shaft and the proximal connecting member connected to the distal connecting member. The distal connecting member and the proximal connecting member by moving the inner and outer shafts as a means of further having an outer shaft and expanding the basket from the retracted transport shape to form a deployed shape. The device according to claim 6, wherein a method of bringing the catheter closer to each other is adopted, and the basket is configured to contract by separating the inner shaft and the outer shaft of the catheter.

8.

The device according to any one of claims 1 to 7, wherein the electric field supplied by the plurality of electrodes includes a continuous electric field or a pulsed electric field.

9.

The device according to any one of claims 1 to 8, wherein the plurality of electrodes are attached to an inner surface or an outer surface of the support or member of the basket, or embedded in the support or member of the basket.

10.

The plurality of electrodes arranged along each of the columns or members of the basket include a single electrode, a common but separated electrode, or a common and continuous electrode. The device according to any one of claims 9.

11.

The device according to any one of claims 1 to 10, wherein the plurality of electrodes can dynamically assign their respective positions.

12.

The device according to any one of claims 1 to 11, wherein the plurality of electrodes are configured to be used in a bipolar manner.

13.

The device according to any one of claims 1 to 11, wherein the plurality of electrodes are configured to be used in a unipolar manner in whole or in a subset thereof

14.

The plurality of electrodes facilitate the procedure of stimulating the renal nerve before, during, or after nerve regulation, thereby facilitating the placement of the catheter, monitoring of the effect of the treatment, or both. The device according to any one of claims 1 to 13, which is configured as such.

15.

The apparatus according to any one of claims 1 to 14, further comprising an electric field generator installed outside the body of the subject.

Aerin Exhibit 1011, Page 286 of 2183
Aerin Medical Inc. v. Neurent Medical Ltd.
IPR2025-01126

(12) INTERNATIONAL APPLICATION PUBLISHED UNDER THE PATENT COOPERATION TREATY (PCT)

(19) World Intellectual Property Organization
International Bureau

(43) International Publication Date
14 October 2021 (14.10.2021)

WIPO | PCT

(10) International Publication Number
WO 2021/205231 A1

(51) International Patent Classification:
A61B 18/12 (2006.01) *A61B 18/14* (2006.01)
A61B 18/00 (2006.01)

(21) International Application Number:
PCT/IB2021/000243

(22) International Filing Date:
08 April 2021 (08.04.2021)

(25) Filing Language: English

(26) Publication Language: English

(30) Priority Data:
63/007,639 09 April 2020 (09.04.2020) US

(71) Applicant: **NEURENT MEDICAL LIMITED** [IE/IE]; No. 1 Oran Point, Main Street, Oranmore, Galway (IE).

(72) Inventors: **TOWNLEY, David**; Latoon North, Newmarket-on-fergus, County Clare (IE). **RATHAN, Swetha**; 73, The Willows, Raheen, Athenry, Galway (IE). **MCLAUGHLIN, Cathal**; 40 An Sailin, Wellpark, Galway (IE). **POUDEL, Anup**; Bayview Heights, Ballybane, Galway (IE). **BIGGS, Manus**; Porridgetown East, Rosscahill, Galway (IE).

(81) Designated States *(unless otherwise indicated, for every kind of national protection available)*: AE, AG, AL, AM, AO, AT, AU, AZ, BA, BB, BG, BH, BN, BR, BW, BY, BZ, CA, CH, CL, CN, CO, CR, CU, CZ, DE, DJ, DK, DM, DO, DZ, EC, EE, EG, ES, FI, GB, GD, GE, GH, GM, GT, HN, HR, HU, ID, IL, IN, IR, IS, IT, JO, JP, KE, KG, KH, KN, KP, KR, KW, KZ, LA, LC, LK, LR, LS, LU, LY, MA, MD, ME, MG, MK, MN, MW, MX, MY, MZ, NA, NG, NI, NO, NZ, OM, PA, PE, PG, PH, PL, PT, QA, RO, RS, RU, RW, SA, SC, SD, SE, SG, SK, SL, ST, SV, SY, TH, TJ, TM, TN, TR, TT, TZ, UA, UG, US, UZ, VC, VN, WS, ZA, ZM, ZW.

(84) Designated States *(unless otherwise indicated, for every kind of regional protection available)*: ARIPO (BW, GH, GM, KE, LR, LS, MW, MZ, NA, RW, SD, SL, ST, SZ, TZ, UG, ZM, ZW), Eurasian (AM, AZ, BY, KG, KZ, RU, TJ, TM), European (AL, AT, BE, BG, CH, CY, CZ, DE, DK, EE, ES, FI, FR, GB, GR, HR, HU, IE, IS, IT, LT, LU, LV, MC, MK, MT, NL, NO, PL, PT, RO, RS, SE, SI, SK, SM, TR), OAPI (BF, BJ, CF, CG, CI, CM, GA, GN, GQ, GW, KM, ML, MR, NE, SN, TD, TG).

(54) **Title:** SYSTEMS AND METHODS FOR IDENTIFYING AND CHARACTERIZING TISSUE AND PROVIDING TARGETED TREATMENT THEREOF

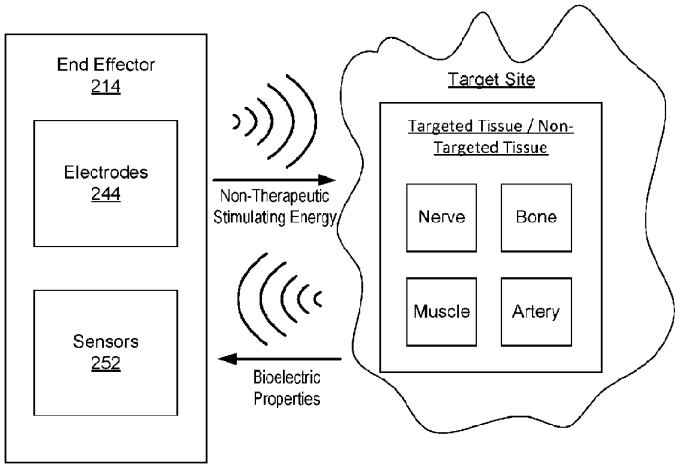

FIG. 9A

(57) **Abstract:** The invention generally relates to systems and methods for providing detection, identification, and precision targeting of specific tissue of interest to undergo a therapeutic treatment while minimizing or avoiding collateral damage to surrounding or adjacent non- targeted tissue.

[Continued on next page]

WO 2021/205231 A1

Published:

— *with international search report (Art. 21(3))*

— *before the expiration of the time limit for amending the claims and to be republished in the event of receipt of amendments (Rule 48.2(h))*

SYSTEMS AND METHODS FOR IDENTIFYING AND CHARACTERIZING TISSUE AND PROVIDING TARGETED TREATMENT THEREOF

Cross-reference to Related Applications

This application claims the benefit of, and priority to, U.S. Provisional Patent Application No. 63/007,639, filed April 9, 2020, the contents of which are incorporated by reference.

Field of the Invention

The invention generally relates to systems and methods for providing detection, identification, and precision targeting of specific tissue(s) of interest to undergo a therapeutic treatment while minimizing or avoiding collateral damage to surrounding or adjacent non-targeted tissue.

Background

Certain surgical procedures, such as ablation therapy, require a surgeon to apply precise treatment to the intended target site (i.e., tissue intended to receive treatment) at appropriate levels so as to avoid collateral damage to surrounding tissue, which can lead to further complications and even death. For example, certain procedures require increased precision due to the nature tissue to be treated and the location of such tissue in relation to any nearby or underlying tissue that may be highly sensitive and/or is critical to keep intact and free of unintended damage (i.e., blood vessels, nerves, etc.).

For example, many neuromodulation procedures require such precision. Neuromodulation refers to the alteration, or modulation, of nerve activity by delivering electrical (or sometimes pharmaceutical) agents directly to a target area. The delivery of electrical stimulation can result in partial or complete incapacitation, or other effective disruption, of neural activity. Therapeutic neuromodulation, for example, can include partially or completely inhibiting, reducing, and/or blocking neural communication along neural fibers for the treatment of certain conditions and disorders, specifically for pain relief and/or restoration of function. Some conditions and disorders that may be treated via neuromodulation include, but are not limited to, epilepsy, migraine headaches, spinal cord injuries, Parkinson's disease, and urinary incontinence, to name a few. Neuromodulation can also be used to treat certain conditions

Aerin Exhibit 1011, Page 289 of 2183
Aerin Medical Inc. v. Neurent Medical Ltd.
IPR2025-01126

associated with the nose, such as rhinosinusitis, including, but not limited to, allergic rhinitis, non-allergic rhinitis, chronic rhinitis, acute rhinitis, recurrent rhinitis, chronic sinusitis, acute sinusitis, recurrent sinusitis, and medical resistant rhinitis and/or sinusitis, in addition to combinations of one or more of the preceding conditions.

Neuromodulation treatment procedures may generally involve the application of electrodes to the brain, the spinal cord, or peripheral nerves for subsequent treatment of conditions or disorders associated therewith. The electrodes are coupled, via an extension cable, to a pulse generator and power source, which generates the necessary electrical stimulation. An electrical current passes from the generator to the nerve, and can either inhibit pain signals or stimulate neural impulses where they were previously absent. Importantly, electrodes must be precisely placed and the level of electrical stimulation must be controlled so as to avoid or minimize creating collateral damage to surrounding or adjacent non-neural structures, such as bone and blood vessels, as well as non-targeted neural tissue.

Peripheral nerve stimulation is a commonly used approach to treat peripheral neurological conditions and conditions, including chronic pain. In order to establish accurate placement of electrodes and level of electrical stimulation to the targeted peripheral nerve, peripheral nerve stimulation treatment typically requires an initial testing or trial period. For example, a small electrical device (a wire-like electrode) is surgically implanted and placed next to one of the peripheral nerves. The electrode delivers rapid electrical pulses during the initial testing period (trial) to determine whether the electrical pulses result in the desired effect. Once the desired effect is established (via repositioning and/or adjusting of electrical stimulation levels) a more permanent electrode may be implanted into a patient's body. Accordingly, a drawback to current neuromodulation procedures, notably neuromodulation of peripheral nerves, is that such procedures cannot precisely target neural tissue, thereby presenting risk of causing significant collateral damage to surrounding non-neural tissue (such as blood vessels), and/or other non-targeted neural tissue.

Another exemplary procedure requiring precision includes interventional cardiac electrophysiology (EP) procedures, for example. In such a procedure, it is often necessary for the surgeon to determine the condition of cardiac tissue at a target ablation site in or near the heart. During some EP procedures, the surgeon may deliver a mapping catheter through a main vein or artery into an interior region of the heart to be treated. Using the mapping catheter, the

Aerin Exhibit 1011, Page 290 of 2183
Aerin Medical Inc. v. Neurent Medical Ltd.
IPR2025-01126

surgeon may then determine the source of a cardiac rhythm disturbance or abnormality by placing a number of mapping elements carried by the catheter into contact with the adjacent cardiac tissue and then operating the catheter to generate an electrophysiology map of the interior region of the heart based on sensed electrical cardiac signals. Once a map of the heart is generated, the surgeon may then advance an ablation catheter into the heart, and position an ablation electrode carried by the catheter tip near the targeted cardiac tissue to ablate the tissue and form a lesion, thereby treating the cardiac rhythm disturbance or abnormality. In some techniques, the ablation catheter itself may include a number of mapping electrodes, allowing the same device to be used for both mapping and ablation.

Various ultrasound-based imaging catheters and probes have been developed for visualizing body tissue in applications such as interventional cardiology, interventional radiology, and electrophysiology. For interventional cardiac electrophysiology procedures, for example, ultrasound imaging devices have been developed that permit the visualization of anatomical structures of the heart directly and in real-time. While such imaging-based products allow some form of visualization of the targeted tissue, such procedures still lack the ability to precisely target and apply treatment to the tissue of interest while reducing or eliminating the risk of further treatment non-targeted, adjacent tissue.

Summary

The invention recognizes that knowing certain bioelectric properties of tissue, both active and passive, specifically interfacial polarization, dielectric dispersion, and dielectric relaxation phenomena/behavior of tissue, at a given target site prior to electrotherapeutic treatment (i.e., neuromodulation, ablation, etc.) provides an ability to more precisely target a specific tissue of interest (i.e., targeted tissue) and minimize and/or prevent collateral damage to adjacent or surrounding non-targeted tissue.

For example, certain target sites intended to undergo treatment may consist of more than one type of tissue (i.e., nerves, muscles, bone, blood vessels, etc.). In particular, a tissue of interest (i.e., the specific tissue to undergo treatment) may be adjacent to one or more tissues that are not of interest (i.e., tissue that is not intended to undergo treatment). In one scenario, a surgeon may wish to provide electrotherapeutic stimulation to a nerve tissue, while avoiding providing any such stimulation to an adjacent blood vessel, for example, as unintended collateral

Aerin Exhibit 1011, Page 291 of 2183
Aerin Medical Inc. v. Neurent Medical Ltd.
IPR2025-01126

damage may result in damage to the blood vessel and cause further complications. In such a scenario, the specific type of targeted tissue may generally dictate the level of electrical stimulation required to elicit a desired effect. Furthermore, physical properties of the targeted tissue, including the specific location and depth of the targeted tissue, in relation to the non-targeted tissue, further impacts the level of electrical stimulation necessary to result in effective therapeutic treatment.

The invention provides systems and methods with an ability to characterize, prior to an electrotherapeutic treatment, tissue at a target site by sensing bioelectric properties of tissue, wherein such characterization includes identifying specific types of tissue present and further determining a interfacial polarization, or dielectric dispersion and relaxation phenomena/behavior pattern for the identified types of tissue. For example, different tissue types include different physiological and histological characteristics (e.g., cell components, proteins, etc.). As a result of the different characteristics, different tissue types have different associated bioelectrical properties and thus exhibit different associated electrical behavior in response to application of energy and frequencies applied thereto. One change in such electrical behavior is referred to as relaxation phenomena. The relaxation phenomena of a given tissue occurs at a particular electrical frequency in which the membranes of cells of the given tissue become permeable to thereby allow electrical stimulation current (at the particular frequency) to flow through the membrane to thereby elicit a desired effect upon the tissue. When a tissue is not exhibiting the relaxation phenomena (i.e., when electrical stimulation current is tuned to a different frequency that does not correlate to the relaxation phenomena), the membranes of cells of the given tissue may or may not be permeable to that specific electrical stimulation current and thus do not elicit an effect. The systems and methods are further configured to tune energy output (i.e., delivery of electrotherapeutic stimulation) based on the these relaxation patterns of a tissue of interest such that the energy delivered is at a specific frequency configured to target the tissue of interest while avoiding the non-targeted tissue (i.e., the energy is tuned to a frequency level associated with the dielectric relaxation phenomena of the targeted tissue only).

Accordingly, the invention solves the problem of causing unnecessary collateral damage to non-targeted tissue during a procedure involving the application of electrotherapeutic stimulation at a target site composed of a variety of tissue types. In particular, the systems and methods are able to, prior to treatment, characterize and identify tissue types and further identify

Aerin Exhibit 1011, Page 292 of 2183
Aerin Medical Inc. v. Neurent Medical Ltd.
IPR2025-01126

specific levels of energy (i.e., specific target frequencies) to be delivered so as to cause only those intended, targeted tissues to exhibit dielectric relaxation phenomena and thus receive the energy for treatment, while non-targeted tissues remain intact and avoid collateral damage.

One aspect of the present invention provides a system for treating a condition. The system includes a device comprising an end effector including a plurality of electrodes and a controller operably associated with the device. The controller is configured to receive data from the device associated with bioelectric properties of one or more tissues at the target site and process the data to identify a type of each of the one or more tissues at the target site and further identify a dielectric relaxation pattern for each of the one or more identified tissue types. The controller is further configured to determine an ablation pattern to be delivered by one or more of the plurality of electrodes of the end effector based on identified dielectric relaxation patterns. The ablation energy associated with the ablation pattern is at a level sufficient to ablate a targeted tissue and minimize and/or prevent collateral damage to surrounding or adjacent non-targeted tissue at the target site.

The bioelectric properties may include, but are not limited to, complex impedance, resistance, reactance, capacitance, inductance, complex, real and imaginary dielectric permittivity, conductivity, dielectric properties, muscle or nerve firing voltage, muscle or nerve firing current, depolarization, hyperpolarization, magnetic field, induced electromotive force, and combinations thereof. The dielectric properties may include, for example, at least a complex dielectric permittivity. It should be noted that, in some embodiments, a subset of the plurality of electrodes is configured to deliver non-therapeutic stimulating energy at a frequency/waveform to respective positions at the target site to thereby sense the bioelectric properties of the one or more tissues at the target site.

The processing of the data may include, but is not limited to, comparing the data received from the device with electric signatures, as well as data with different dielectric models (e.g., Havriliak–Negami (HN) relaxation) to determine the dielectric parameters associated with a plurality of known tissue types. For example, the controller may be configured to compare the tissue data (i.e., data received from the treatment device associated with tissue at the target site) with profiles of known tissue types stored in a database, for example. Each profile may generally include electric signature data that generally characterizes a known tissue type, including physiological, histological, and bioelectric properties of a known tissue type, including

Aerin Exhibit 1011, Page 293 of 2183
Aerin Medical Inc. v. Neurent Medical Ltd.
IPR2025-01126

dielectric relaxation phenomena/behavior of the tissue and the specific frequency value at which the tissue exhibits the dielectric relaxation phenomena/behavior.

In some embodiments, the ablation energy is tuned to a target frequency associated with a dielectric relaxation pattern of the targeted tissue. The target frequency comprises a frequency at which the targeted tissue exhibits relaxation phenomena behavior and the non-targeted tissue does not exhibit relaxation phenomena behavior. In particular, delivery of the ablation energy, tuned to the target frequency, penetrates a membrane of one or more cells associated only with the targeted tissue.

In some embodiments, the condition includes a peripheral neurological condition. The peripheral neurological condition may be associated with a nasal condition or a non-nasal condition of the patient. For example, the non-nasal condition may include atrial fibrillation (AF). In some embodiments, the nasal condition may include rhinosinusitis. Accordingly, in some embodiments, the target site is within a sino-nasal cavity of the patient. The delivery of the ablation energy may result in disruption of multiple neural signals to, and/or result in local hypoxia of, mucus producing and/or mucosal engorgement elements within the sino-nasal cavity of the patient. The targeted tissue is proximate or inferior to a sphenopalatine foramen. Yet still, delivery of the ablation energy may result in therapeutic modulation of postganglionic parasympathetic nerves innervating nasal mucosa at foramina and or microforamina of a palatine bone of the patient. In particular, delivery of the ablation energy causes multiple points of interruption of neural branches extending through foramina and microforamina of palatine bone. Yet still, in some embodiments, delivery of the ablation energy may cause thrombus formation within one or more blood vessels associated with mucus producing and/or mucosal engorgement elements within the nose. The resulting local hypoxia of the mucus producing and/or mucosal engorgement elements may result in decreased mucosal engorgement to thereby increase volumetric flow through a nasal passage of the patient. Additionally, or alternatively, the resulting local hypoxia may cause neuronal degeneration.

Another aspect of the invention provides a method for treating a condition. The method includes providing a device comprising an end effector including a plurality of electrodes and a controller operably associated with the device. The method further includes positioning the end effector at a target site associated with a patient and receiving, via the controller, data from the device associated with bioelectric properties of one or more tissues at the target site. The method

Aerin Exhibit 1011, Page 294 of 2183
Aerin Medical Inc. v. Neurent Medical Ltd.
IPR2025-01126

further includes processing, via the controller, the data to identify a type of each of the one or more tissues at the target site and further identify a dielectric relaxation pattern for each of the one or more identified tissue types. The method further includes determining, via the controller, an ablation pattern to be delivered by one or more of the plurality of electrodes of the end effector based on identified dielectric relaxation patterns. The ablation energy associated with the ablation pattern is at a level sufficient to ablate a targeted tissue and minimize and/or prevent collateral damage to surrounding or adjacent non-targeted tissue at the target site.

The bioelectric properties may include, but are not limited to, complex impedance, resistance, reactance, capacitance, inductance, complex, real and imaginary dielectric permittivity, conductivity, dielectric properties, muscle or nerve firing voltage, muscle or nerve firing current, depolarization, hyperpolarization, magnetic field, induced electromotive force, and combinations thereof. The dielectric properties may include, for example, at least a dielectric modulus or a complex dielectric permittivity. It should be noted that, in some embodiments, a subset of the plurality of electrodes is configured to deliver non-therapeutic stimulating energy at a frequency/waveform to respective positions at the target site to thereby sense the bioelectric properties of the one or more tissues at the target site.

The processing of the data may include, but is not limited to, comparing the data received from the device with electric signature, and training of the data with different dielectric models (e.g., Havriliak–Negami (HN) relaxation) to determine the dielectric parameters associated with a plurality of known tissue types. For example, the controller may be configured to compare the tissue data (i.e., data received from the treatment device associated with tissue at the target site) with profiles of known tissue types stored in a database, for example. Each profile may generally include electric signature data that generally characterizes a known tissue type, including physiological, histological, and bioelectric properties of a known tissue type, including dielectric relaxation phenomena/behavior of the tissue and the specific frequency value at which the tissue exhibits the dielectric relaxation phenomena/behavior.

In some embodiments, the ablation energy is tuned to a target frequency associated with a dielectric relaxation pattern of the targeted tissue. The target frequency comprises a frequency at which the targeted tissue exhibits relaxation phenomena behavior and the non-targeted tissue does not exhibit relaxation phenomena behavior. In particular, delivery of the ablation energy,

Aerin Exhibit 1011, Page 295 of 2183
Aerin Medical Inc. v. Neurent Medical Ltd.
IPR2025-01126

tuned to the target frequency, penetrates a membrane of one or more cells associated only with the targeted tissue.

In some embodiments, the condition includes a peripheral neurological condition. The peripheral neurological condition may be associated with a nasal condition or a non-nasal condition of the patient. For example, the non-nasal condition may include atrial fibrillation (AF). In some embodiments, the nasal condition may include rhinosinusitis. Accordingly, in some embodiments, the target site is within a sino-nasal cavity of the patient. The delivery of the ablation energy may result in disruption of multiple neural signals to, and/or result in local hypoxia of, mucus producing and/or mucosal engorgement elements within the sino-nasal cavity of the patient. The targeted tissue is proximate or inferior to a sphenopalatine foramen. Yet still, delivery of the ablation energy may result in therapeutic modulation of postganglionic parasympathetic nerves innervating nasal mucosa at foramina and or microforamina of a palatine bone of the patient. In particular, delivery of the ablation energy causes multiple points of interruption of neural branches extending through foramina and microforamina of palatine bone. Yet still, in some embodiments, delivery of the ablation energy may cause thrombus formation within one or more blood vessels associated with mucus producing and/or mucosal engorgement elements within the nose. The resulting local hypoxia of the mucus producing and/or mucosal engorgement elements may result in decreased mucosal engorgement to thereby increase volumetric flow through a nasal passage of the patient. Additionally, or alternatively, the resulting local hypoxia may cause neuronal degeneration.

Brief Description of the Drawings

FIGS. 1A and 1B are diagrammatic illustrations of a system for treating a condition of a patient using a handheld device according to some embodiments of the present disclosure.

FIG. 2 is a diagrammatic illustration of the console coupled to the handheld device consistent with the present disclosure, further illustrating one embodiment of an end effector of the handheld device for delivering energy to tissue at one or more target sites.

FIG. 3 is a side view of one embodiment of a handheld device for providing therapeutic treatment consistent with the present disclosure.

FIG. 4 is an enlarged, perspective view of one embodiment of an end effector consistent with the present disclosure.

Aerin Exhibit 1011, Page 296 of 2183
Aerin Medical Inc. v. Neurent Medical Ltd.
IPR2025-01126

FIGS. 5A-5F are various views of the multi-segment end effector consistent with the present disclosure.

FIG. 5A is an enlarged, perspective view of the multi-segment end effector illustrating the first (proximal) segment and second (distal) segment. FIG. 5B is an exploded, perspective view of the multi-segment end effector. FIG. 5C is an enlarged, top view of the multi-segment end effector. FIG. 5D is an enlarged, side view of the multi-segment end effector. FIG. 5E is an enlarged, front (proximal facing) view of the first (proximal) segment of the multi-segment end effector. FIG. 5F is an enlarged, front (proximal facing) view of the second (distal) segment of the multi-segment end effector.

FIG. 6 is a perspective view, partly in section, of a portion of a support element illustrating an exposed conductive wire serving as an energy delivery element or electrode element.

FIG. 7 is a cross-sectional view of a portion of the shaft of the handheld device taken along lines 7-7 of FIG. 3.

FIG. 8A is a side view of the handle of the handheld device.

FIG. 8B is a side view of the handle illustrating internal components enclosed within.

FIG. 9A is a block diagram illustrating delivery of non-therapeutic energy from electrodes of the end effector at a frequency/waveform for sensing one or more properties associated with one or more tissues at a target site in response to the non-therapeutic energy.

FIG. 9B is a block diagram illustrating communication of sensor data from the handheld device to the controller and subsequent tuning, via the controller, of energy output based on the sensor data for precision targeting of tissue of interest and to be treated.

FIG. 9C is a block diagram illustrating delivery of energy to the target site tuned to a specific frequency to elicit dielectric relaxation phenomena/behavior in the targeted tissue (based on the ablation pattern output from the controller).

FIG. 10 is a block diagram illustrating delivery of energy to the target site, and specifically illustrating flow of current through membranes of cells of the targeted tissue (which is exhibit dielectric relaxation phenomena/behavior) and flow of current around membranes of cells of non-targeted tissue (which is not exhibiting dielectric relaxation phenomena/behavior) as a result of the energy being tuned to a target frequency.

Aerin Exhibit 1011, Page 297 of 2183
Aerin Medical Inc. v. Neurent Medical Ltd.
IPR2025-01126

FIG. 11 is a flow diagram illustrating one embodiment of a method for treating a condition.

FIG. 12 is a schematic of an exemplary probe/electrode setup for performing some of the methods described herein, most notably for characterizing tissue at a target site by sensing bioelectric properties of tissue, wherein such characterization includes identifying specific types of tissue present and further determining a dielectric relaxation phenomena/behavior pattern for the identified types of tissue. FIG. 12A is a schematic diagram of one embodiment of a 3-probe/electrode system for sensing bioelectric properties of tissue for subsequent characterization of tissue at a target site, wherein such characterization includes identifying specific types of tissue present and further determining a dielectric relaxation phenomena/behavior pattern for the identified types of tissue.

FIGS. 13A and 13B are graphs illustrating dielectric properties of two tissue types (spinal cord and muscle tissues), including the plotting of loss tangent value relative to frequency (FIG. 13A) and the plotting of an imaginary electric modulus relative to frequency (FIG. 13B).

FIGS. 14A-14H are graphs illustrating the plotting of real and imaginary values of the complex relative permittivity (based on the Havriliak–Negami (HN) relaxation phenomena model) relative to frequency for the two tissue types of FIGS. 13A and 13B (spinal cord and muscle tissues).

FIGS. 14A and 14B illustrate plotting of real and imaginary values of the complex relative permittivity relative to frequency for upper spinal cord tissue.

FIGS. 14C and 14D illustrate plotting of real and imaginary values of the complex relative permittivity relative to frequency for lower spinal cord tissue.

FIGS. 14E and 14F are graphs illustrating the plotting of real and imaginary values of the complex relative permittivity relative to frequency for lower back muscle tissue.

FIGS. 14G and 14H are graphs illustrating the plotting of real and imaginary values of the complex relative permittivity relative to frequency for upper back muscle tissue.

FIGS. 15A and 15B are graphs illustrating dielectric properties of different portions of a tissue (turbinate tissue), including the plotting of loss tangent value relative to frequency (FIG. 15A) and the plotting of an imaginary electric modulus relative to frequency (FIG. 15B).

Aerin Exhibit 1011, Page 298 of 2183
Aerin Medical Inc. v. Neurent Medical Ltd.
IPR2025-01126

FIGS. 16A-16F are graphs illustrating the plotting of real and imaginary values of the complex relative permittivity (based on the HN relaxation phenomena model) relative to frequency for the different portions of the turbinate tissue of FIGS. 15A and 15B.

FIGS. 16A and 16B illustrate plotting of real and imaginary values of the complex relative permittivity relative to frequency for the end of a turbinate tissue.

FIGS. 16C and 16D illustrate plotting of real and imaginary values of the complex relative permittivity relative to frequency for the center of the turbinate tissue.

FIGS. 16E and 16F are graphs illustrating the plotting of real and imaginary values of the complex relative permittivity relative to frequency for portions of the turbinate tissue near blood vessels.

Detailed Description

The invention recognizes that knowing certain bioelectric properties of tissue, both active and passive, specifically interfacial polarization, dielectric dispersion, and dielectric relaxation phenomena/behavior of tissue, at a given target site prior to electrotherapeutic treatment (i.e., neuromodulation, ablation, etc.) provides an ability to more precisely target a specific tissue of interest (i.e., targeted tissue) and minimize and/or prevent collateral damage to adjacent or surrounding non-targeted tissue.

For example, certain target sites intended to undergo treatment may consist of more than one type of tissue (i.e., nerves, muscles, bone, blood vessels, etc.). In particular, a tissue of interest (i.e., the specific tissue to undergo treatment) may be adjacent to one or more tissues that are not of interest (i.e., tissue that is not intended to undergo treatment). In one scenario, a surgeon may wish to provide electrotherapeutic stimulation to a nerve tissue, while avoiding providing any such stimulation to an adjacent blood vessel, for example, as unintended collateral damage may result in damage to the blood vessel and cause further complications. In such a scenario, the specific type of targeted tissue may generally dictate the level of electrical stimulation required to elicit a desired effect. Furthermore, physical properties of the targeted tissue, including the specific location and depth of the targeted tissue, in relation to the non-targeted tissue, further impacts the level of electrical stimulation necessary to result in effective therapeutic treatment.

Neuromodulation, for example, is technology that acts directly upon nerves. It is the

Aerin Exhibit 1011, Page 299 of 2183
Aerin Medical Inc. v. Neurent Medical Ltd.
IPR2025-01126

alteration, or modulation, of nerve activity by delivering electrical or pharmaceutical agents directly to a target area. Neuromodulation devices and treatments have been shown to be highly effective at treating a variety of conditions and disorders. The most common indication for neuromodulation is treatment of chronic pain. However, the number of neuromodulation applications over the years has increased to include more than just the treatment of chronic pain, such as deep brain stimulation (DBS) treatment for Parkinson's disease, sacral nerve stimulation for pelvic disorders and incontinence, and spinal cord stimulation for ischemic disorders (angina, peripheral vascular disease).

Neuromodulation is particularly useful in the treatment of peripheral neurological disorders. There are currently over 100 kinds of peripheral nerve disorders, which can affect one nerve or many nerves. Some are the result of other diseases, like diabetic nerve problems. Others, like Guillain-Barre syndrome, happen after a virus infection. Still others are from nerve compression, like carpal tunnel syndrome or thoracic outlet syndrome. In some cases, like complex regional pain syndrome and brachial plexus injuries, the problem begins after an injury. However, some people are born with peripheral neurological disorders.

Peripheral nerve stimulation has become established for very specific clinical indications, including certain complex regional pain syndromes, pain due to peripheral nerve injuries, and the like. Some of the common applications of peripheral nerve stimulation include treatment of back pain, occipital nerve stimulation for treatment of migraine headaches, and pudendal nerve stimulation that is being investigated for use in urinary bladder incontinence.

The invention provides systems and methods with an ability to characterize, prior to an electrotherapeutic treatment such as neuromodulation, tissue at a target site by sensing bioelectric properties of tissue, wherein such characterization includes identifying specific types of tissue present and further determining a dielectric relaxation phenomena/behavior pattern for the identified types of tissue. For example, different tissue types include different physiological and histological characteristics (e.g., cell components, extracellular proteins, etc.). As a result of the different characteristics, different tissue types have different associated electrical and electrochemical properties and thus exhibit different associated behavior in response to application of energy and/or frequency applied thereto. The electrical behavior of tissue type (capacitive to resistive or vice versa) alters at specific frequencies due to the relaxation phenomena. The interfacial polarization , dielectric dispersion and relaxation phenomenon of a

Aerin Exhibit 1011, Page 300 of 2183
Aerin Medical Inc. v. Neurent Medical Ltd.
IPR2025-01126

given tissue occurs at a particular electrical frequency in which the membranes of cells of the given tissue become permeable to thereby allow electrical stimulation current (at the particular frequency) to flow through the membrane to thereby elicit a desired effect upon the tissue.

For example, the alternating current (AC) energy transfer through the tissue type takes place either through capacitive or resistive means and is highly dependent on the frequency of an energy used. For example, if the transfer of energy at specific frequency in tissue type taking place though relatively higher resistive means, these phenomena will slowly alter upon changing frequency and, at certain frequency, the conduction though capacitive behavior becomes active. These phenomena are generally represented Maxwell-Wagner-Sillar (MWS) relaxation. Similarly, the permeability of current types (direct current or alternating current) depends on the specific frequency and varies with the cell types, constituency and morphology. The dielectric permittivity and dielectric relaxation frequency heighten when a tissue is stimulated at specific frequency. Below the specific relaxation frequency such as dielectric relaxation, the tissue is highly permeable to the alternating current. However, at the region of relaxation frequency, the heating effects become dominant. Hence, when a tissue is not exhibiting the dielectric relaxation phenomena (i.e., when electrical stimulation current is tuned to a different frequency (i.e., below and above the relaxation frequency) that does not correlate to the dielectric relaxation phenomena), the membranes of cells of the given tissue are not permeable to that specific electrical stimulation current and thus do not elicit an effect. The systems and methods are further configured to tune energy output (i.e., delivery of electrotherapeutic stimulation) based on the dielectric relaxation pattern of a tissue of interest such that the energy delivered is at a specific frequency configured to target the tissue of interest while avoiding the non-targeted tissue (i.e., the energy is tuned to a frequency level associated with the dielectric relaxation phenomena of the targeted tissue only).

Accordingly, the invention solves the problem of causing unnecessary collateral damage to non-targeted tissue during a procedure involving the application of electrotherapeutic stimulation at a target site composed of a variety of tissue types. In particular, the systems and methods are able to, prior to treatment, characterize and identify tissue types and further identify specific levels of energy (i.e., specific target frequencies) to be delivered so as to cause only those intended, targeted tissues to exhibit dielectric relaxation phenomena and thus receive the energy for treatment, while non-targeted tissues remain intact and avoid collateral damage.

Aerin Exhibit 1011, Page 301 of 2183
Aerin Medical Inc. v. Neurent Medical Ltd.
IPR2025-01126

It should be noted that, although many of the embodiments are described with respect to devices, systems, and methods for therapeutically modulating nerves associated with the peripheral nervous system (PNS) and thus the treatment of peripheral neurological conditions or disorders, other applications and other embodiments in addition to those described herein are within the scope of the present disclosure. For example, at least some embodiments of the present disclosure may be useful for the treatment of other disorders, such as the treatment of disorders associated with the central nervous system.

FIGS. 1A and 1B are diagrammatic illustrations of a therapeutic system 100 for treating a condition of a patient using a handheld device 102 according to some embodiments of the present disclosure. The system 100 generally includes a device 102 and a console 104 to which the device 102 is to be connected. FIG. 2 is a diagrammatic illustrations of the console 104 coupled to the handheld device 102 illustrating an exemplary embodiment of an end effector 114 for delivering energy to tissue at the one or more target sites of a patient for the treatment of a neurological disorder. As illustrated, the device 102 is a handheld device, which includes end effector 114, a shaft 116 operably associated with the end effector 114, and a handle 118 operably associated with the shaft 116. The end effector 114 may be collapsible/retractable and expandable, thereby allowing for the end effector 114 to be minimally invasive (i.e., in a collapsed or retracted state) upon delivery to one or more target sites within a patient and then expanded once positioned at the target site. It should be noted that the terms "end effector" and "therapeutic assembly" may be used interchangeably throughout this disclosure.

For example, a surgeon or other medical professional performing a procedure can utilize the handle 118 to manipulate and advance the shaft 116 to a desired target site, wherein the shaft 116 is configured to locate at least a distal portion thereof intraluminally at a treatment or target site within a portion of the patient associated with tissue to undergo electrotherapeutic stimulation for subsequent treatment of an associated condition or disorder. In the event that the tissue to be treated is a nerve, such that electrotherapeutic stimulation thereof results in treatment of an associated neurological condition, the target site may generally be associated with peripheral nerve fibers. The target site may be a region, volume, or area in which the target nerves are located and may differ in size and shape depending upon the anatomy of the patient. Once positioned, the end effector 114 may be deployed and subsequently deliver energy to the one or more target sites. The energy delivered may be non-therapeutic stimulating energy at a

Aerin Exhibit 1011, Page 302 of 2183
Aerin Medical Inc. v. Neurent Medical Ltd.
IPR2025-01126

frequency for locating neural tissue and further sensing one or more properties of the neural tissue. For example, the end effector 114 may include an electrode array, which includes at least a subset of electrodes configured to sense the presence of neural tissue at a respective position of each of the electrodes, as well as morphology of the neural tissue, wherein such data may be used for determining, via the console 104, the type of neural tissue as well as a dielectric relaxation phenomena/behavior pattern for the identified neural tissue.

Based on the identification of the neural tissue type and a dielectric relaxation phenomena/behavior pattern of the neural tissue, the console 104 is configured to tune energy output (i.e., delivery of electrotherapeutic stimulation) based on the dielectric relaxation pattern of the targeted tissue such that the energy delivered from the end effector 114 upon the target site is at a specific frequency so as to therapeutically modulate the neural tissue (i.e., the energy is tuned to a frequency level associated with the dielectric relaxation phenomena of the targeted tissue only) and minimize and/or prevent damage to non-target neural tissue and/or non-target anatomical structures at the target site, such as blood vessels and/or bone. Accordingly, the end effector 114 is able to therapeutically modulating nerves of interest, particularly nerves associated with a peripheral neurological conditional or disorder so as to treat such condition or disorder, while minimizing and/or preventing collateral damage.

For example, the end effector 114 may include at least one energy delivery element, such as an electrode, configured to delivery energy to the target tissue which may be used for sensing presence and/or specific properties of tissue (such tissue including, but not limited to, muscle, nerves, blood vessels, bones, etc.) for therapeutically modulating tissues of interest, such as neural tissue. For example, one or more electrodes may be provided by one or more portions of the end effector 114, wherein the electrodes may be configured to apply electromagnetic neuromodulation energy (e.g., radiofrequency (RF) energy) to target sites. In other embodiments, the end effector 114 may include other energy delivery elements configured to provide therapeutic neuromodulation using various other modalities, such as cryotherapeutic cooling, ultrasound energy (e.g., high intensity focused ultrasound ("HIFU") energy), microwave energy (e.g., via a microwave antenna), direct heating, high and/or low power laser energy, mechanical vibration, and/or optical power.

In some embodiments, the end effector 114 may include one or more sensors (not shown), such as one or more temperature sensors (e.g., thermocouples, thermistors, etc.),

Aerin Exhibit 1011, Page 303 of 2183
Aerin Medical Inc. v. Neurent Medical Ltd.
IPR2025-01126

impedance sensors, and/or other sensors. The sensors and/or the electrodes may be connected to one or more wires extending through the shaft 116 and configured to transmit signals to and from the sensors and/or convey energy to the electrodes.

As shown, the device 102 is operatively coupled to the console 104 via a wired connection, such as cable 120. It should be noted, however, that the device 102 and console 104 may be operatively coupled to one another via a wireless connection. The console 104 is configured to provide various functions for the device 102, which may include, but is not limited to, controlling, monitoring, supplying, and/or otherwise supporting operation of the device 102. For example, when the device 102 is configured for electrode-based, heat-element-based, and/or transducer-based treatment, the console 104 may include an energy generator 106 configured to generate RF energy (e.g., monopolar, bipolar, or multi-polar RF energy), pulsed electrical energy, microwave energy, optical energy, ultrasound energy (e.g., intraluminally-delivered ultrasound and/or HIFU), direct heat energy, radiation (e.g., infrared, visible, and/or gamma radiation), and/or another suitable type of energy.

In some embodiments, the console 104 may include a controller 107 communicatively coupled to the device 102. However, in the embodiments described herein, the controller 107 may generally be carried by and provided within the handle 118 of the device 102. The controller 107 is configured to initiate, terminate, and/or adjust operation of one or more electrodes provided by the end effector 114 directly and/or via the console 104. For example, the controller 107 can be configured to execute an automated control algorithm and/or to receive control instructions from an operator (e.g., surgeon or other medical professional or clinician). For example, the controller 107 and/or other components of the console 104 (e.g., processors, memory, etc.) can include a computer-readable medium carrying instructions, which when executed by the controller 107, causes the device 102 to perform certain functions (e.g., apply energy in a specific manner, detect impedance, detect temperature, detect nerve locations or anatomical structures, etc.). A memory includes one or more of various hardware devices for volatile and non-volatile storage, and can include both read-only and writable memory. For example, a memory can comprise random access memory (RAM), CPU registers, read-only memory (ROM), and writable non-volatile memory, such as flash memory, hard drives, floppy disks, CDs, DVDs, magnetic storage devices, tape drives, device buffers, and so forth. A memory is not a propagating signal divorced from underlying hardware; a memory is thus non-

Aerin Exhibit 1011, Page 304 of 2183
Aerin Medical Inc. v. Neurent Medical Ltd.
IPR2025-01126

transitory.

The console 104 may further be configured to provide feedback to an operator before, during, and/or after a treatment procedure via evaluation/feedback algorithms 110. For example, the evaluation/feedback algorithms 110 can be configured to provide information associated with the location of nerves at the treatment site, the temperature of the tissue at the treatment site, and/or the effect of the therapeutic neuromodulation on the nerves at the treatment site. In certain embodiments, the evaluation/feedback algorithm 110 can include features to confirm efficacy of the treatment and/or enhance the desired performance of the system 100. For example, the evaluation/feedback algorithm 110, in conjunction with the controller 107, can be configured to monitor temperature at the treatment site during therapy and automatically shut off the energy delivery when the temperature reaches a predetermined maximum (e.g., when applying RF energy) or predetermined minimum (e.g., when applying cryotherapy). In other embodiments, the evaluation/feedback algorithm 110, in conjunction with the controller 107, can be configured to automatically terminate treatment after a predetermined maximum time, a predetermined maximum impedance rise of the targeted tissue (i.e., in comparison to a baseline impedance measurement), a predetermined maximum impedance of the targeted tissue), and/or other threshold values for biomarkers associated with autonomic function. This and other information associated with the operation of the system 100 can be communicated to the operator via a graphical user interface (GUI) 112 provided via a display on the console 104 and/or a separate display (not shown) communicatively coupled to the console 104, such as a tablet or monitor. The GUI 112 may generally provide operational instructions for the procedure, such as indicating when the device 102 is primed and ready to perform the treatment, and further providing status of therapy during the procedure, including indicating when the treatment is complete.

For example, as previously described, the end effector 114 and/or other portions of the system 100 can be configured to detect various parameters of a tissue of interest at the target site to determine the anatomy at the target site (e.g., tissue types, tissue locations, vasculature, bone structures, foramen, sinuses, etc.), locate nerves and/or other structures, and allow for neural mapping. For example, the end effector 114 may be configured to detect impedance, dielectric properties, temperature, and/or other properties that indicate the presence of neural tissue or fibers in the target region, as described in greater detail herein.

Aerin Exhibit 1011, Page 305 of 2183
Aerin Medical Inc. v. Neurent Medical Ltd.
IPR2025-01126

As shown in FIG. 1A, the console 104 further includes a monitoring system 108 configured to receive data from the end effector 114 (i.e., detected electrical and/or thermal measurements of tissue at the target site), specifically sensed by appropriate sensors (e.g., temperature sensors and/or impedance sensors, or the like), and process this information to identify the presence of nerves, the location of nerves, neural activity at *the* target site, and/or other properties of the neural tissue, such a physiological properties (e.g., depth), bioelectric properties, and thermal properties. The nerve monitoring system 108 can be operably coupled to the electrodes and/or other features of the end effector 114 via signal wires (e.g., copper wires) that extend through the cable 120 and through the length of the shaft 116. In other embodiments, the end effector 114 can be communicatively coupled to the nerve monitoring system 108 using other suitable communication means.

The nerve monitoring system 108 can determine neural locations and activity before therapeutic neuromodulation to determine precise treatment regions corresponding to the positions of the desired nerves. The nerve monitoring system 108 can further be used during treatment to determine the effect of the therapeutic neuromodulation, and/or after treatment to evaluate whether the therapeutic neuromodulation treated the target nerves to a desired degree. This information can be used to make various determinations related to the nerves proximate to the target site, such as whether the target site is suitable for neuromodulation. In addition, the nerve monitoring system 108 can also compare the detected neural locations and/or activity before and after therapeutic neuromodulation, and compare the change in neural activity to a predetermined threshold to assess whether the application of therapeutic neuromodulation was effective across the treatment site. For example, the nerve monitoring system 108 can further determine electroneurogram (ENG) signals based on recordings of electrical activity of neurons taken by the end effector 114 before and after therapeutic neuromodulation. Statistically meaningful (e.g., measurable or noticeable) decreases in the ENG signal(s) taken after neuromodulation can serve as an indicator that the nerves were sufficiently ablated. Additional features and functions of the nerve monitoring system 108, as well as other functions of the various components of the console 104, including the evaluation/feedback algorithms 110 for providing real-time feedback capabilities for ensuring optimal therapy for a given treatment is administered, are described in at least U.S. Publication No. 2016/0331459 and U.S. Publication No. 2018/0133460, the contents of each of which are incorporated by reference herein in their

Aerin Exhibit 1011, Page 306 of 2183
Aerin Medical Inc. v. Neurent Medical Ltd.
IPR2025-01126

entireties.

The device 102 provides access to target sites associated with peripheral nerves for the subsequent neuromodulation of such nerves and treatment of a corresponding peripheral neurological condition or disorder. The peripheral nervous system is one of two components that make up the nervous system of bilateral animals, with the other part being the central nervous system (CNS). The PNS consists of the nerves and ganglia outside the brain and spinal cord. The main function of the PNS is to connect the CNS to the limbs and organs, essentially serving as a relay between the brain and spinal cord and the rest of the body. The peripheral nervous system is divided into the somatic nervous system and the autonomic nervous system. In the somatic nervous system, the cranial nerves are part of the PNS with the exception of the optic nerve (cranial nerve II), along with the retina. The second cranial nerve is not a true peripheral nerve but a tract of the diencephalon. Cranial nerve ganglia originated in the CNS. However, the remaining ten cranial nerve axons extend beyond the brain and are therefore considered part of the PNS. The autonomic nervous system exerts involuntary control over smooth muscle and glands. The connection between CNS and organs allows the system to be in two different functional states: sympathetic and parasympathetic. Accordingly, the devices, systems, and methods of the present invention are useful in detecting, identifying, and precision targeting nerves associated with the peripheral nervous system for treatment of corresponding peripheral neurological conditions or disorders.

The peripheral neurological conditions or disorders may include, but are not limited to, chronic pain, movement disorders, epilepsy, psychiatric disorders, cardiovascular disorders, gastrointestinal disorders, genitourinary disorders, to name a few. For example, chronic pain may include headaches, complex regional pain syndrome, neuropathy, peripheral neuralgia, ischemic pain, failed back surgery syndrome, and trigeminal neuralgia. The movement disorders may include spasticity, Parkinson's disease, tremor, dystonia, Tourette syndrome, camptocormia, hemifacial spasm, and Meige syndrome. The psychiatric disorders may include depression, obsessive compulsive disorder, drug addiction, and anorexia/eating disorders. The functional restoration may include restoration of certain functions post traumatic brain injury, hearing impairment, and blindness. The cardiovascular disorders may include angina, heart failure, hypertension, peripheral vascular disorders, and stroke. The gastrointestinal disorders may

Aerin Exhibit 1011, Page 307 of 2183
Aerin Medical Inc. v. Neurent Medical Ltd.
IPR2025-01126

include dysmotility and obesity. The genitourinary disorders may include painful bladder syndrome, interstitial cystitis, and voiding dysfunction.

For example, the system 100 may be used for the treatment of a cardiovascular disorder, such as arrhythmias or heart rhythm disorders, including, but not limited to, atrial fibrillation (AF or A-fib). Atrial fibrillation is an irregular and often rapid heart rate that can increase one's risk of stroke, heart failure, and other heart-related complications. Atrial fibrillation occurs when regions of cardiac tissue abnormally conduct electric signals to adjacent tissue, thereby disrupting the normal cardiac cycle and causing asynchronous rhythm. Atrial fibrillation symptoms often include heart palpitations, shortness of breath, and weakness. While episodes of atrial fibrillation can come and go, a person may develop atrial fibrillation that doesn't go away and thus will require treatment. Although atrial fibrillation itself usually isn't life-threatening, it is a serious medical condition that sometimes requires emergency treatment, as it may lead to complications. For example, atrial fibrillation is associated with an increased risk of heart failure, dementia, and stroke.

The normal electrical conduction system of the heart allows the impulse that is generated by the sinoatrial node (SA node) of the heart to be propagated to and stimulate the myocardium (muscular layer of the heart). When the myocardium is stimulated, it contracts. It is the ordered stimulation of the myocardium that allows efficient contraction of the heart, thereby allowing blood to be pumped to the body. In AF, the normal regular electrical impulses generated by the sinoatrial node in the right atrium of the heart are overwhelmed by disorganized electrical impulses usually originating in the roots of the pulmonary veins. This leads to irregular conduction of ventricular impulses that generate the heartbeat. In particular, during AF, the heart's two upper chambers (the atria) beat chaotically and irregularly, out of coordination with the two lower chambers (the ventricles) of the heart.

During atrial fibrillation, the regular impulses produced by the sinus node for a normal heartbeat are overwhelmed by rapid electrical discharges produced in the atria and adjacent parts of the pulmonary veins. Sources of these disturbances are either automatic foci, often localized at one of the pulmonary veins, or a small number of localized sources in the form of either a re-entrant leading circle, or electrical spiral waves (rotors). These localized sources may be found in the left atrium near the pulmonary veins or in a variety of other locations through both the left or right atrium. There are three fundamental components that favor the establishment of a

Aerin Exhibit 1011, Page 308 of 2183
Aerin Medical Inc. v. Neurent Medical Ltd.
IPR2025-01126

leading circle or a rotor: 1) slow conduction velocity of cardiac action potential; 2) short refractory period; and 3) small wavelength. Wavelength is the product of velocity and refractory period. If the action potential has fast conduction, with a long refractory period and/or conduction pathway shorter than the wavelength, an AF focus would not be established. In multiple wavelet theory, a wavefront will break into smaller daughter wavelets when encountering an obstacle, through a process called vortex shedding; but under proper conditions, such wavelets can reform and spin around a center, forming an AF focus.

The system 100 provides for the treatment of AF, in which the device 102 may provide access to and provide treatment of one or more target sites associated with nerves that correspond to, or are otherwise associated with, treating AF. For example, the device 102, in conjunction with the console 104, may detect, identify, and precision target cardiac tissue and subsequently deliver energy at a level or frequency sufficient to therapeutically modulate nerves associated with such cardiac tissue. The therapeutic modulation of such nerves is sufficient to disrupt the origin of the signals causing the AF and/or disrupt the conducting pathway for such signals.

Similar to the conduction system of the heart, a neural network exists which surrounds the heart and plays an important role in formation of the substrate of AF and when a trigger is originated, usually from pulmonary vein sleeves, AF occurs. This neural network includes ganglionated plexi (GP) located adjacent to pulmonary vein ostia which are under control of higher centers in normal people. For example, the heart is richly innervated by the autonomic nerves. The ganglion cells of the autonomic nerves are located either outside the heart (extrinsic) or inside the heart (intrinsic). Both extrinsic and intrinsic nervous systems are important for cardiac function and arrhythmogenesis. The vagal nerves include axons that come from various nuclei in the medulla. The extrinsic sympathetic nerves come from the paravertebral ganglia, including the superior cervical ganglion, middle cervical ganglion, the cervicothoracic (stellate) ganglion and the thoracic ganglia. The intrinsic cardiac nerves are found mostly in the atria, and are intimately involved in atrial arrhythmogenesis cardiovascular disorder, such as arrhythmias or heart rhythm disorders, including, but not limited to, atrial fibrillation. When GP become hyperactive owing to loss of inhibition from higher centers (e.g., in elderly), AF can occur.

The system 100 can be used to control hyperactive GP either by stimulating higher centers and their connections, such as vagus nerve stimulation, or simply by ablating GP.

Aerin Exhibit 1011, Page 309 of 2183
Aerin Medical Inc. v. Neurent Medical Ltd.
IPR2025-01126

Accordingly, the device 102, in conjunction with the console 104, may detect and identify ganglionated plexus (GP) and further determine an energy level sufficient to therapeutically modulate or treat (i.e., ablate) the GP for the treatment of AF (i.e., surgically disrupting the origin of the signals causing the AF and disrupting the conducting pathway for such signals) while minimizing and/or preventing collateral damage to surrounding or adjacent non-neural tissue including bloods vessels and bone and non-targeted neural tissue. It should be noted that other nerves and/or cardiac tissue, or other structures, known to have an impact on or cause AF, may be targeted by the system 100, including, but not limited to, pulmonary veins (e.g., pulmonary vein isolation upon creation of lesions around PV ostia to prevent triggers from reaching atrial substrate).

In addition to treating arrhythmias, the system 100 may also be used for the treatment of other cardiovascular-related conditions, particularly those involving the kidney. The kidneys play a significant role in the progression of CHF, as well as in Chronic Renal Failure (CRF), End-Stage Renal Disease (ESRD), hypertension (pathologically high blood pressure), and other cardio-renal diseases.

The functions of the kidney can be summarized under three broad categories: filtering blood and excreting waste products generated by the body's metabolism; regulating salt, water, electrolyte and acid-base balance; and secreting hormones to maintain vital organ blood flow. Without properly functioning kidneys, a patient will suffer water retention, reduced urine flow and an accumulation of waste toxins in the blood and body. These conditions resulting from reduced renal function or renal failure (kidney failure) are believed to increase the workload of the heart.

For example, in a CHF patient, renal failure will cause the heart to further deteriorate as the water build-up and blood toxins accumulate due to the poorly functioning kidneys and, in turn, cause the heart further harm. CHF is a condition that occurs when the heart becomes damaged and reduces blood flow to the organs of the body. If blood flow decreases sufficiently, kidney function becomes impaired and results in fluid retention, abnormal hormone secretions and increased constriction of blood vessels. These results increase the workload of the heart and further decrease the capacity of the heart to pump blood through the kidney and circulatory system. This reduced capacity further reduces blood flow to the kidney. It is believed that progressively decreasing perfusion of the kidney is a principal non-cardiac cause perpetuating

Aerin Exhibit 1011, Page 310 of 2183
Aerin Medical Inc. v. Neurent Medical Ltd.
IPR2025-01126

the downward spiral of CHF. Moreover, the fluid overload and associated clinical symptoms resulting from these physiologic changes are predominant causes for excessive hospital admissions, reduced quality of life, and overwhelming costs to the health care system due to CHF.

End-stage renal disease is another condition at least partially controlled by renal neural activity. There has been a dramatic increase in patients with ESRD due to diabetic nephropathy, chronic glomerulonephritis and uncontrolled hypertension. Chronic renal failure (CRF) slowly progresses to ESRD. CRF represents a critical period in the evolution of ESRD. The signs and symptoms of CRF are initially minor, but over the course of 2-5 years, become progressive and irreversible. While some progress has been made in combating the progression to, and complications of, ESRD, the clinical benefits of existing interventions remain limited.

Arterial hypertension is a major health problem worldwide. Treatment-resistant hypertension is defined as the failure to achieve target blood pressure despite the concomitant use of maximally tolerated doses of three different antihypertensive medications, including a diuretic. Treatment-resistant hypertension is associated with considerable morbidity and mortality. Patients with treatment-resistant hypertension have markedly increased cardiovascular morbidity and mortality, facing an increase in the risk of myocardial infarction (MI), stroke, and death compared to patients whose hypertension is adequately controlled.

The autonomic nervous system is recognized as an important pathway for control signals that are responsible for the regulation of body functions critical for maintaining vascular fluid balance and blood pressure. The autonomic nervous system conducts information in the form of signals from the body's biologic sensors such as baroreceptors (responding to pressure and volume of blood) and chemoreceptors (responding to chemical composition of blood) to the central nervous system via its sensory fibers. It also conducts command signals from the central nervous system that control the various innervated components of the vascular system via its motor fibers.

It is known from clinical experience and research that an increase in renal sympathetic nerve activity leads to vasoconstriction of blood vessels supplying the kidney, decreased renal blood flow, decreased removal of water and sodium from the body, and increased renin secretion. It is also known that reduction of sympathetic renal nerve activity, e.g., via denervation, may reverse these processes.

Aerin Exhibit 1011, Page 311 of 2183
Aerin Medical Inc. v. Neurent Medical Ltd.
IPR2025-01126

The renal sympathetic nervous system plays a critical influence in the pathophysiology of hypertension. The adventitia of the renal arteries has efferent and afferent sympathetic nerves. Renal sympathetic activation via the efferent nerves initiates a cascade resulting in elevated blood pressure. Efferent sympathetic outflow leads to vasoconstriction with a subsequent reduction in glomerular blood flow, a lowering of the glomerular filtration rate, release of renin by the juxtaglomerular cells, and the subsequent activation of the renin-angiotensin-aldosterone axis leading to increased tubular reabsorption of sodium and water. Decreased glomerular filtration rate also prompts additional systemic sympathetic release of catecholamines. As a consequence, blood pressure increases by a rise in total blood volume and increased peripheral vascular resistance.

The system 100 can be used for the treatment of cardio-renal diseases, including hypertension, by providing renal neuromodulation and/or denervation. For example, the device 102 may be placed at one or more target sites associated with renal nerves other neural fibers that contribute to renal neural function, or other neural features. For example, the device 102, in conjunction with the console 104, may detect, identify, and precision target renal nerve tissue and subsequently deliver energy at a level or frequency sufficient to therapeutically modulate nerves associated with such renal tissue. The therapeutic modulation of such renal nerves and/or renal tissue is sufficient to completely block or denervate the target neural structures and/or disrupt renal nervous activity, while minimizing and/or preventing collateral damage to surrounding or adjacent non-neural tissue including bloods vessels and bone and non-targeted neural tissue.

It should further be noted that the system 100 can be used to determine disease progression. In particular, the present system 100 can obtain measurements at one or more target sites associated with a given disease, disorder, or the like. Such measurements may be based on the active neural parameters (i.e., neuronal firing and active voltage monitoring) and may be used to identify neurons. The active neural parameters (and thus behavior) change with disease progression, thereby allowing the present system to identify such changes and determine a progression of the underlying disease or disorder. Such capabilities are possible based, at least in part, on the fact that the present system 100 is configured to monitor passive electric phenomena (i.e., the present system 100 determines the ohmic conductivity frequency, which remains consistent, while conductivity will be different based on disease or disorder progression).

Aerin Exhibit 1011, Page 312 of 2183
Aerin Medical Inc. v. Neurent Medical Ltd.
IPR2025-01126

FIG. 3 is a side view of one embodiment of a handheld device for providing therapeutic neuromodulation consistent with the present disclosure. As previously described, the device 102 includes an end effector (not shown) transformable between a collapsed/retracted configuration and an expanded deployed configuration, a shaft 116 operably associated with the end effector, and a handle 118 operably associated with the shaft 116. The handle 118 includes at least a first mechanism 126 for deployment of the end effector from collapsed/retracted configuration to the expanded, deployed configuration, and a second mechanism 128, separate from the first mechanism 124, for control of energy output by the end effector, specifically electrodes or other energy elements provided by the end effector. The handheld device 102 may further include an auxiliary line 121, which may provide a fluid connection between a fluid source, for example, and the shaft 116 such that fluid may be provided to a target site via the distal end of the shaft 116. In some embodiments, the auxiliary line 121 may provide a connection between a vacuum source and the shaft 116, such that the device 102 may include suction capabilities (via the distal end of the shaft 116).

FIG. 4 is an enlarged, perspective view of one embodiment of an end effector 214 consistent with the present disclosure. As shown, the end effector 214 is generally positioned at a distal portion 116b of the shaft 116. The end effector 214 is transformable between a low-profile delivery state to facilitate intraluminal delivery of the end effector 214 to a treatment site and an expanded state, as shown. The end effector 214 includes a plurality of struts 240 that are spaced apart from each other to form a frame or basket 242 when the end effector 214 is in the expanded state. The struts 240 can carry one or more energy delivery elements, such as a plurality of electrodes 244. In the expanded state, the struts 240 can position at least two of the electrodes 244 against tissue at a target site within a particular region. The electrodes 244 can apply bipolar or multi-polar RF energy to the target site to therapeutically modulate nerves associated with a peripheral neurological condition or disorder. In various embodiments, the electrodes 244 can be configured to apply pulsed RF energy with a desired duty cycle (e.g., 1 second on/0.5 seconds off) to regulate the temperature increase in the target tissue.

In the embodiment illustrated in FIG. 4, the basket 242 includes eight branches 246 spaced radially apart from each other to form at least a generally spherical structure, and each of the branches 246 includes two struts 240 positioned adjacent to each other. In other embodiments, however, the basket 242 can include fewer than eight branches 246 (e.g., two,

Aerin Exhibit 1011, Page 313 of 2183
Aerin Medical Inc. v. Neurent Medical Ltd.
IPR2025-01126

three, four, five, six, or seven branches) or more than eight branches 246. In further embodiments, each branch 246 of the basket 242 can include a single strut 240, more than two struts 240, and/or the number of struts 240 per branch can vary. In still further embodiments, the branches 246 and struts 240 can form baskets or frames having other suitable shapes for placing the electrodes 244 in contact with tissue at the target site. For example, when in the expanded state, the struts 240 can form an ovoid shape, a hemispherical shape, a cylindrical structure, a pyramid structure, and/or other suitable shapes.

The end effector 214 can further include an internal or interior support member 248 that extends distally from the distal portion 116b of the shaft 116. A distal end portion 250 of the support member 248 can support the distal end portions of the struts 240 to form the desired basket shape. For example, the struts 240 can extend distally from the distal potion 116b of the shaft 116 and the distal end portions of the struts 240 can attach to the distal end portion 250 of the support member 248. In certain embodiments, the support member 248 can include an internal channel (not shown) through which electrical connectors (e.g., wires) coupled to the electrodes 244 and/or other electrical features of the end effector 214 can run. In various embodiments, the internal support member 248 can also carry an electrode (not shown) at the distal end portion 250 and/or along the length of the support member 248.

The basket 242 can transform from the low-profile delivery state to the expanded state (shown in FIG. 4) by either manually manipulating a handle of the device 102, interacting with the first mechanism 126 for deployment of the end effector 214 from collapsed/retracted configuration to the expanded, deployed configuration, and/or other feature at the proximal portion of the shaft 116 and operably coupled to the basket 242. For example, to move the basket 242 from the expanded state to the delivery state, an operator can push the support member 248 distally to bring the struts 240 inward toward the support member 248. An introducer or guide sheath (not shown) can be positioned over the low-profile end effector 214 to facilitate intraluminal delivery or removal of the end effector 214 from or to the target site. In other embodiments, the end effector 214 is transformed between the delivery state and the expanded state using other suitable means, such as the first mechanism 126, as will be described in greater detail herein.

The individual struts 240 can be made from a resilient material, such as a shape-memory material (e.g., Nitinol) that allows the struts 240 to self-expand into the desired shape of the

Aerin Exhibit 1011, Page 314 of 2183
Aerin Medical Inc. v. Neurent Medical Ltd.
IPR2025-01126

basket 242 when in the expanded state. In other embodiments, the struts 240 can be made from other suitable materials and/or the end effector 214 can be mechanically expanded via a balloon or by proximal movement of the support member 248. The basket 242 and the associated struts 240 can have sufficient rigidity to support the electrodes 244 and position or press the electrodes 244 against tissue at the target site. In addition, the expanded basket 242 can press against surrounding anatomical structures proximate to the target site and the individual struts 240 can at least partially conform to the shape of the adjacent anatomical structures to anchor the end effector 214 at the treatment site during energy delivery. In addition, the expansion and conformability of the struts 240 can facilitate placing the electrodes 244 in contact with the surrounding tissue at the target site.

At least one electrode 244 is disposed on individual struts 240. In the illustrated embodiment, two electrodes 244 are positioned along the length of each strut 240. In other embodiments, the number of electrodes 244 on individual struts 240 be only one, more than two, zero, and/or the number of electrodes 244 on the different struts 240 can vary. The electrodes 244 can be made from platinum, iridium, gold, silver, stainless steel, platinum-iridium, cobalt chromium, iridium oxide, polyethylenedioxythiophene ("PEDOT"), titanium, titanium nitride, carbon, carbon nanotubes, platinum grey, Drawn Filled Tubing ("DFT") with a silver core made by Fort Wayne Metals of Fort Wayne, Ind., and/or other suitable materials for delivery RF energy to target tissue.

In certain embodiments, each electrode 444 can be operated independently of the other electrodes 244. For example, each electrode can be individually activated and the waveform, polarity and amplitude of each electrode can be selected by an operator or a control algorithm (e.g., executed by the controller 107 of FIG. 1A). Various embodiments of such independently controlled electrodes 244 are described in greater detail herein. The selective independent control of the electrodes 244 allows the end effector 214 to deliver RF energy to highly customized regions and to further create multiple micro-lesions to selectively modulate a target neural structure by effectively causing multi-point interruption of a neural signal due to the multiple micro-lesions. For example, a select portion of the electrodes 244 can be activated to target neural fibers in a specific region while the other electrodes 244 remain inactive. In certain embodiments, for example, electrodes 244 may be activated across the portion of the basket 242 that is adjacent to tissue at the target site, and the electrodes 244 that are not proximate to the

Aerin Exhibit 1011, Page 315 of 2183
Aerin Medical Inc. v. Neurent Medical Ltd.
IPR2025-01126

target tissue can remain inactive to avoid applying energy to non-target tissue. Such configurations facilitate selective therapeutic modulation of nerves along a portion of a target site without applying energy to structures in other portions of the target site.

The electrodes 244 can be electrically coupled to an RF generator (e.g., the generator 106 of FIG. 1A) via wires (not shown) that extend from the electrodes 244, through the shaft 116, and to the RF generator. When each of the electrodes 244 is independently controlled, each electrode 244 couples to a corresponding wire that extends through the shaft 116. In other embodiments, multiple electrodes 244 can be controlled together and, therefore, multiple electrodes 244 can be electrically coupled to the same wire extending through the shaft 116. The RF generator and/or components operably coupled (e.g., a control module) thereto can include custom algorithms to control the activation of the electrodes 244. For example, the RF generator can deliver RF power at about 200-300 W to the electrodes 244, and do so while activating the electrodes 244 in a predetermined pattern selected based on the position of the end effector 214 relative to the treatment site and/or the identified locations of the target nerves. In other embodiments, the RF generator delivers power at lower levels (e.g., less than 1 W, 2-5W, 5-15 W, 15-50 W, 50-150 W, etc.) and/or higher power levels.

The end effector 214 can further include one or more sensors 252 (e.g., temperature sensors, impedance sensors, etc.) disposed on the struts 240 and/or other portions of the end effector 214 and configured to sense/detect one or more properties associated with tissue at a target site. For example, temperature sensors are configured to detect the temperature adjacent thereto. The sensors 252 can be electrically coupled to a console (e.g., the console 104 of FIG. 1A) via wires (not shown) that extend through the shaft 116. In various embodiments, the sensors 252 can be positioned proximate to the electrodes 244 to detect various properties of targeted tissue and/or the treatment associated therewith. As will be described in greater detail herein, the sensed data can be provided to the console 104, wherein such data is generally related to at least bioelectric properties of tissue at the target site. In turn, the console 104 (via the controller 107, monitoring system 108, and evaluation/feedback algorithms 110) is configured to process such data and determine to identify a type of each of the one or more tissues at the target site and further identify a dielectric relaxation pattern for each of the one or more identified tissue types. The console (via the controller 107, monitoring system 108, and evaluation/feedback algorithms 110) is further configured to determine an ablation pattern to be

Aerin Exhibit 1011, Page 316 of 2183
Aerin Medical Inc. v. Neurent Medical Ltd.
IPR2025-01126

delivered by one or more of the plurality of electrodes of the end effector based on identified dielectric relaxation patterns. The ablation energy associated with the ablation pattern is at a level sufficient to ablate a targeted tissue and minimize and/or prevent collateral damage to surrounding or adjacent non-targeted tissue at the target site.

In some embodiments, the device 102 may further be configured to provide the console 104 with sensed data in the form of feedback data associated with the effect of the therapeutic stimulation on the targeted tissue. For example, feedback data may be associated with efficacy of ablation upon targeted tissue (e.g., neural tissue) during and/or after delivery of initial energy from one or more of the plurality of electrodes. Accordingly, in certain embodiments, the console 104 (via the controller 107, monitoring system 108, and evaluation/feedback algorithms 110) is configured to process such feedback data to determine if certain properties of the targeted tissue undergoing treatment (e.g., tissue temperature, tissue impedance, etc.) reach predetermined thresholds for irreversible tissue damage. The controller 107 can tune energy output individually for the one or more electrodes after an initial level of energy has been delivered based, at least in part, on feedback data. For example, once the threshold is reached, the application of therapeutic neuromodulation energy can be terminated to allow the tissue to remain intact. In certain embodiments, the energy delivery can automatically be tuned based on an evaluation/feedback algorithm (e.g., the evaluation/feedback algorithm 110 of FIG. 1A) stored on a console (e.g., the console 104 of FIG. 1A) operably coupled to the end effector 214.

FIGS. 5A-5F are various views of another embodiment of an end effector 314 consistent with the present disclosure. As generally illustrated, the end effector 314 is a multi-segmented end effector, which includes at least a first segment 322 and a second segment 324 spaced apart from one another. The first segment 322 is generally positioned closer to a distal portion of the shaft 116, and is thus sometimes referred to herein as the proximal segment 322, while the second segment 324 is generally positioned further from the distal portion of the shaft 116 and is thus sometimes referred to herein as the distal segment 324. Each of the first and second segments 322 and 324 is transformable between a retracted configuration, which includes a low-profile delivery state and a deployed configuration, which includes an expanded state, as shown in the figures. The end effector 314 is generally designed to be positioned within a nasal region of the patient for the treatment of a rhinosinusitis condition while minimizing or avoiding collateral damage to surrounding tissue, such as blood vessels or bone. In particular, the end

Aerin Exhibit 1011, Page 317 of 2183
Aerin Medical Inc. v. Neurent Medical Ltd.
IPR2025-01126

effector 314 is configured to be advanced within the nasal cavity and be positioned at one or more target sites generally associated with postganglionic parasympathetic fibers that innervate the nasal mucosa. In turn, the end effector 314 is configured to therapeutically modulate the postganglionic parasympathetic nerves.

It should be noted, however, that an end effector consistent with the present disclosure may be multi-segmented in a similar fashion as end effector 314 and may be used to provide treatment in other regions of the patient outside of the nasal cavity and thus is not limited to the particular design/configuration as the end effector 314 nor the intended treatment site (e.g., nasal cavity). Rather, other multi-segmented designs are contemplated for use in particular regions of a patient, particularly regions in which the use of multiple and distinct segments would be advantageous, as is the case with the end effector 314 design due to the anatomy of the nasal cavity.

FIG. 5A is an enlarged, perspective view of the multi-segment end effector illustrating the first (proximal) segment 322 and second (distal) segment 324. FIG. 5B is an exploded, perspective view of the multi-segment end effector 314. FIG. 5C is an enlarged, top view of the multi-segment end effector 314. FIG. 5D is an enlarged, side view of the multi-segment end effector 314. FIG. 5E is an enlarged, front (proximal facing) view of the first (proximal) segment 322 of the multi-segment end effector 314 and FIG. 5F is an enlarged, front (proximal facing) view of the second (distal) segment 324 of the multi-segment end effector 314.

As illustrated, the first segment 322 includes at least a first set of flexible support elements, generally in the form of wires, arranged in a first configuration, and the second segment 324 includes a second set of flexible support elements, also in the form of wires, arranged in a second configuration. The first and second sets of flexible support elements include composite wires having conductive and elastic properties. For example, in some embodiments, the composite wires include a shape memory material, such as Nitinol. The flexible support elements may further include a highly lubricious coating, which may allow for desirable electrical insulation properties as well as desirable low friction surface finish. Each of the first and second segments 322, 324 is transformable between a retracted configuration and an expanded deployed configuration such that the first and second sets of flexible support elements are configured to position one or more electrodes provided on the respective segments (see

Aerin Exhibit 1011, Page 318 of 2183
Aerin Medical Inc. v. Neurent Medical Ltd.
IPR2025-01126

electrodes 336 in FIGS. 5E and 5F) into contact with one or more target sites when in the deployed configuration.

As shown, when in the expanded deployed configuration, the first set of support elements of the first segment 322 includes at least a first pair of struts 330a,330b, each comprising a loop (or leaflet) shape and extending in an upward direction and a second pair of struts 332a, 332b, each comprising a loop (or leaflet) shape and extending in a downward direction, generally in an opposite direction relative to at least the first pair of struts 330a, 330b. It should be noted that the terms upward and downward are used to describe the orientation of the first and second segments 322, 324 relative to one another. More specifically, the first pair of struts 330a, 330b generally extend in an outward inclination in a first direction relative to a longitudinal axis of the multi-segment end effector 314 and are spaced apart from one another. Similarly, the second pair of struts 332a, 332b extend in an outward inclination in a second direction substantially opposite the first direction relative to the longitudinal axis of the multi-segment end effector and spaced apart from one another.

The second set of support elements of the second segment 324, when in the expanded deployed configuration, includes a second set of struts 334(1), 334(2), 334(n) (approximately six struts), each comprising a loop shape extending outward to form an open-ended circumferential shape. As shown, the open-ended circumferential shape generally resembles a blooming flower, wherein each looped strut 334 may generally resemble a flower petal. It should be noted that the second set of struts 334 may include any number of individual struts and is not limited to six, as illustrated. For example, in some embodiments, the second segment 124 may include two, three, four, five, six, seven, eight, nine, ten, or more struts 334.

The first and second segments 322, 324, specifically struts 330, 332, and 334 include one or more energy delivery elements, such as a plurality of electrodes 336. It should be noted that any individual strut may include any number of electrodes 336 and is not limited to one electrode, as shown. In the expanded state, the struts 330, 332, and 334 can position any number of electrodes 336 against tissue at a target site within the nasal region (e.g., proximate to the palatine bone inferior to the SPF). The electrodes 336 can apply bipolar or multi-polar radiofrequency (RF) energy to the target site to therapeutically modulate postganglionic parasympathetic nerves that innervate the nasal mucosa proximate to the target site. In various embodiments, the electrodes 336 can be configured to apply pulsed RF energy with a desired

Aerin Exhibit 1011, Page 319 of 2183
Aerin Medical Inc. v. Neurent Medical Ltd.
IPR2025-01126

duty cycle (e.g., 1 second on/0.5 seconds off) to regulate the temperature increase in the target tissue.

The first and second segments 322, 324 and the associated struts 330, 332, and 334 can have sufficient rigidity to support the electrodes 336 and position or press the electrodes 336 against tissue at the target site. In addition, each of the expanded first and second segments 322, 324 can press against surrounding anatomical structures proximate to the target site (e.g., the turbinates, the palatine bone, etc.) and the individual struts 330, 332, 334 can at least partially conform to the shape of the adjacent anatomical structures to anchor the end effector 314. In addition, the expansion and conformability of the struts 330, 332, 334 can facilitate placing the electrodes 336 in contact with the surrounding tissue at the target site. The electrodes 336 can be made from platinum, iridium, gold, silver, stainless steel, platinum-iridium, cobalt chromium, iridium oxide, polyethylenedioxythiophene (PEDOT), titanium, titanium nitride, carbon, carbon nanotubes, platinum grey, Drawn Filled Tubing (DFT) with a silver core, and/or other suitable materials for delivery RF energy to target tissue. In some embodiments, such as illustrated in FIG. 6, a strut may include an outer jacket surrounding a conductive wire, wherein portions of the outer jacket are selectively absent along a length of the strut, thereby exposing the underlying conductive wire so as to act as an energy delivering element (i.e., an electrode) and/or sensing element, as described in greater detail herein.

In certain embodiments, each electrode 336 can be operated independently of the other electrodes 336. For example, each electrode can be individually activated and the polarity and amplitude of each electrode can be selected by an operator or a control algorithm (e.g., executed by the controller 107 previously described herein). The selective independent control of the electrodes 336 allows the end effector 314 to deliver RF energy to highly customized regions. For example, a select portion of the electrodes 336 can be activated to target neural fibers in a specific region while the other electrodes 336 remain inactive. In certain embodiments, for example, electrodes 136 may be activated across the portion of the second segment 324 that is adjacent to tissue at the target site, and the electrodes 336 that are not proximate to the target tissue can remain inactive to avoid applying energy to non-target tissue. Such configurations facilitate selective therapeutic modulation of nerves on the lateral nasal wall within one nostril without applying energy to structures in other portions of the nasal cavity.

Aerin Exhibit 1011, Page 320 of 2183
Aerin Medical Inc. v. Neurent Medical Ltd.
IPR2025-01126

The electrodes 336 are electrically coupled to an RF generator (e.g., the generator 106 of FIG. 1A) via wires (not shown) that extend from the electrodes 336, through the shaft 116, and to the RF generator. When each of the electrodes 336 is independently controlled, each electrode 336 couples to a corresponding wire that extends through the shaft 116. In other embodiments, multiple electrodes 336 can be controlled together and, therefore, multiple electrodes 336 can be electrically coupled to the same wire extending through the shaft 116. As previously described, the RF generator and/or components operably coupled (e.g., a control module) thereto can include custom algorithms to control the activation of the electrodes 336. For example, the RF generator can deliver RF power at about 460-480 kHz (+ or - 5 kHz) to the electrodes 336, and do so while activating the electrodes 336 in a predetermined pattern selected based on the position of the end effector 314 relative to the treatment site and/or the identified locations of the target tissues. It should further be noted that the electrodes 336 may be individually activated and controlled (i.e., controlled level of energy output and delivery) based, at least in part, on feedback data. The RF generator is able to provide bipolar low power (10 watts with maximum setting of 50 watts) RF energy delivery, and further provide multiplexing capabilities (across a maximum of 30 channels).

Once deployed, the first and second segments 322, 324 contact and conform to a shape of the respective locations, including conforming to and complementing shapes of one or more anatomical structures at the respective locations. In turn, the first and second segments 322, 324 become accurately positioned within the nasal cavity to subsequently deliver, via one or more electrodes 336, precise and focused application of RF thermal energy or non-thermal energy to the one or more target sites to thereby therapeutically modulate associated neural tissue. More specifically, the first and second segments 322, 324 have shapes and sizes when in the expanded configuration that are specifically designed to place portions of the first and second segments 322, 324, and thus one or more electrodes associated therewith 336, into contact with target sites within nasal cavity associated with postganglionic parasympathetic fibers that innervate the nasal mucosa.

For example, the first set of flexible support elements of the first segment 322 conforms to and complements a shape of a first anatomical structure at the first location when the first segment 322 is in the deployed configuration and the second set of flexible support elements of the second segment 124 conforms to and complements a shape of a second anatomical structure

Aerin Exhibit 1011, Page 321 of 2183
Aerin Medical Inc. v. Neurent Medical Ltd.
IPR2025-01126

at the second location when the second segment is in the deployed configuration. The first and second anatomical structures may include, but are not limited to, inferior turbinate, middle turbinate, superior turbinate, inferior meatus, middle meatus, superior meatus, pterygopalatine region, pterygopalatine fossa, sphenopalatine foramen, accessory sphenopalatine foramen(ae), and sphenopalatine micro-foramen(ae).

In some embodiments, the first segment 322 of the multi-segment end effector 314 is configured in a deployed configuration to fit around at least a portion of a middle turbinate at an anterior position relative to the middle turbinate and the second segment 324 of the multi-segment end effector is configured in a deployed configuration to contact a plurality of tissue locations in a cavity at a posterior position relative to the middle turbinate.

For example, the first set of flexible support elements of the first segment (i.e., struts 330 and 332) conforms to and complements a shape of a lateral attachment and posterior-inferior edge of the middle turbinate when the first segment 322 is in the deployed configuration and the second set of flexible support elements (i.e., struts 334) of the second segment 324 contact a plurality of tissue locations in a cavity at a posterior position relative to the lateral attachment and posterior-inferior edge of middle turbinate when the second segment 324 is in the deployed configuration. Accordingly, when in the deployed configuration, the first and second segments 322, 324 are configured to position one or more associated electrodes 336 at one or more target sites relative to either of the middle turbinate and the plurality of tissue locations in the cavity behind the middle turbinate. In turn, electrodes 336 are configured to deliver RF energy at a level sufficient to therapeutically modulate postganglionic parasympathetic nerves innervating nasal mucosa at an innervation pathway within the nasal cavity of the patient.

As illustrated in FIG. 5E, the first segment 322 comprises a bilateral geometry. In particular, the first segment 322 includes two identical sides, including a first side formed of struts 330a, 332a and a second side formed of struts 330b, 332b. This bilateral geometry allows at least one of the two sides to conform to and accommodate an anatomical structure within the nasal cavity when the first segment 322 is in an expanded state. For example, when in the expanded state, the plurality of struts 330a, 332a contact multiple locations along multiple portions of the anatomical structure and electrodes provided by the struts are configured to emit energy at a level sufficient to create multiple micro-lesions in tissue of the anatomical structure that interrupt neural signals to mucus producing and/or mucosal engorgement elements. In

Aerin Exhibit 1011, Page 322 of 2183
Aerin Medical Inc. v. Neurent Medical Ltd.
IPR2025-01126

particular, struts 330a, 332a conform to and complement a shape of a lateral attachment and posterior-inferior edge of the middle turbinate when the first segment 322 is in the deployed configuration, thereby allowing for both sides of the anatomical structure to receive energy from the electrodes. By having this independence between first and second side (i.e., right and left side) configurations, the first segment 322 is a true bilateral device. By providing a bilateral geometry, the multi-segment end effector 314 does not require a repeat use configuration to treat the other side of the anatomical structure, as both sides of the structure are accounted at the same time due to the bilateral geometry. The resultant micro-lesion pattern can be repeatable and is predictable in both macro element (depth, volume, shape parameter, surface area) and can be controlled to establish low to high effects of each, as well as micro elements (the thresholding of effects within the range of the macro envelope can be controlled), as well be described in greater detail herein. The systems of the present invention are further able to establish gradients within allowing for control over neural effects without having widespread effect to other cellular bodies, as will be described in greater detail herein.

FIG. 7 is a cross-sectional view of a portion of the shaft 116 of the handheld device taken along lines 7-7 of FIG. 3. As illustrated, the shaft 116 may be constructed from multiple components so as to have the ability to constrain the end effector in the retracted configuration (i.e., the low-profile delivery state) when the end effector is retracted within the shaft 116, and to further provide an atraumatic, low profile and durable means to deliver the end effector to the target site. The shaft 116 includes coaxial tubes which travel from the handle 118 to a distal end of the shaft 116. The shaft 116 assembly is low profile to ensure adequate delivery of therapy in areas requiring low-profile access. The shaft 116 includes an outer sheath 138, surrounding a hypotube 140, which is further assembled over electrode wires 129 which surround an inner lumen 142. The outer sheath 138 serves as the interface between the anatomy and the device 102. The outer sheath 138 may generally include a low friction PTFE liner to minimize friction between the outer sheath 138 and the hypotube 140 during deployment and retraction. In particular the outer sheath 138 may generally include an encapsulated braid along a length of the shaft 116 to provide flexibility while retaining kink resistance and further retaining column and/or tensile strength. For example, the outer sheath 138 may include a soft Pebax material, which is atraumatic and enables smooth delivery through a passageway.

Aerin Exhibit 1011, Page 323 of 2183
Aerin Medical Inc. v. Neurent Medical Ltd.
IPR2025-01126

The hypotube 140 is assembled over the electrode wires starting within the handle 118 and travelling to the proximal end of the end effector. The hypotube 140 generally acts to protect the wires during delivery and is malleable to enable flexibility without kinking to thereby improve trackability. The hypotube 140 provides stiffness and enables torqueability of the device 102 to ensure accurate placement of the end effector 314. The hypotube 140 also provides a low friction exterior surface which enables low forces when the outer sheath 138 moves relative to the hypotube 140 during deployment and retraction or constraint. The shaft 116 may be pre-shaped in such a manner so as to complement a given anatomy (e.g., nasal cavity). For example, the hypotube 140 may be annealed to create a bent shaft 116 with a pre-set curve. The hypotube 140 may include a stainless-steel tubing, for example, which interfaces with a liner in the outer sheath 138 for low friction movement.

The inner lumen 142 may generally provide a channel for fluid extraction during a treatment procedure. For example, the inner lumen 142 extends from the distal end of the shaft 116 through the hypotube 140 and to atmosphere via a fluid line (line 121 of FIG. 3). The inner lumen 142 materials are chosen to resist forces of external components acting thereon during a procedure.

FIG. 8A is a side view of the handle of the handheld 118 and FIG. 8B is a side view of the handle 118 illustrating internal components enclosed within. The handle 118 generally includes an ergonomically-designed grip portion which provides ambidextrous use for both left and right handed use and conforms to hand anthropometrics to allow for at least one of an overhand grip style and an underhand grip style during use in a procedure. For example, the handle 118 may include specific contours, including recesses 144, 146, and 148 which are designed to naturally receive one or more of an operator's fingers in either of an overhand grip or underhand grip style and provide a comfortable feel for the operator. For example, in an underhand grip, recess 144 may naturally receive an operator's index finger, recess 146 may naturally receive an operator's middle finger, and recess 148 may naturally receive an operator's ring and little (pinkie or pinky) fingers which wrap around the proximal protrusion 150 and the operator's thumb naturally rests on a top portion of the handle 118 in a location adjacent to the first mechanism 126. In an overhand grip, the operator's index finger may naturally rest on the top portion of the handle 118, adjacent to the first mechanism 126, while recess 144 may naturally receive the operator's middle finger, recess 146 may naturally receive a portion of the

Aerin Exhibit 1011, Page 324 of 2183
Aerin Medical Inc. v. Neurent Medical Ltd.
IPR2025-01126

operator's middle and/or ring fingers, and recess 148 may naturally receive and rest within the space (sometimes referred to as the purlicue) between the operator's thumb and index finger.

As previously described, the handle includes multiple user-operated mechanisms, including at least a first mechanism 126 for deployment of the end effector from the collapsed/retracted configuration to the expanded deployed configuration and a second mechanism 128 for controlling of energy output by the end effector, notably energy delivery from one or more electrodes. As shown, the user inputs for the first and second mechanisms 126, 128 are positioned a sufficient distance to one another to allow for simultaneous one-handed operation of both user inputs during a procedure. For example, user input for the first mechanism 126 is positioned on a top portion of the handle 118 adjacent the grip portion and user input for the second mechanism 128 is positioned on side portions of the handle 118 adjacent the grip portion. As such, in an underhand grip style, the operator's thumb rests on the top portion of the handle adjacent to the first mechanism 126 and at least their middle finger is positioned adjacent to the second mechanism 128, each of the first and second mechanisms 126, 128 accessible and able to be actuated. In an overhand grip system, the operator's index finger rests on the top portion of the handle adjacent to the first mechanism 126 and at least their thumb is positioned adjacent to the second mechanism 128, each of the first and second mechanisms 126, 128 accessible and able to be actuated. Accordingly, the handle accommodates various styles of grip and provides a degree of comfort for the surgeon, thereby further improving execution of the procedure and overall outcome.

Referring to FIG. 8B, the various components provided within the handle 118 are illustrated. As shown, the first mechanism 126 may generally include a rack and pinion assembly providing movement of end effector between the retracted and deployed configurations in response to input from a user-operated controller. The rack and pinion assembly generally includes a set of gears 152 for receiving input from the user-operated controller and converting the input to linear motion of a rack member 154 operably associated with at least one of the shaft 116 and the end effector. The rack and pinion assembly comprises a gearing ratio sufficient to balance a stroke length and retraction and deployment forces, thereby improving control over the deployment of the end effector. As shown, the rack member 154 may be coupled to a portion of the shaft 116, for example, such that movement of the rack member 154 in a direction towards a proximal end of the handle 118 results in corresponding movement of the shaft 116 while the end

Aerin Exhibit 1011, Page 325 of 2183
Aerin Medical Inc. v. Neurent Medical Ltd.
IPR2025-01126

effector remains stationary, thereby exposing the end effector and allowing the end effector to transition from the constrained, retracted configuration to the expanded, deployed configuration. Similarly, movement of the rack member 154 in a direction towards a distal end of the handle 118 results in corresponding movement of the shaft 116 while the end effector remains stationary, and thereby encloses the end effector within the shaft 116. It should be noted that, in other embodiments, the rack member 154 may be directly coupled to a portion of the end effector such that movement of the rack member 154 results in corresponding movement of the end effector while the shaft 116 remains stationary, thereby transitioning the end effector between the retracted and deployed configurations.

The user-operated controller associated with the first mechanism 126 may include a slider mechanism operably associated with the rack and pinion rail assembly. Movement of the slider mechanism in a rearward direction towards a proximal end of the handle results in transitioning of the end effector to the deployed configuration and movement of the slider mechanism in a forward direction towards a distal end of the handle results in transitioning of the end effector to the retracted configuration. In other embodiment, the user-operated controller associated with the first mechanism 126 may include a scroll wheel mechanism operably associated with the rack and pinion rail assembly. Rotation of the wheel in a rearward direction towards a proximal end of the handle results in transitioning of the end effector to the deployed configuration and rotation of the wheel in a forward direction towards a distal end of the handle results in transitioning of the end effector to the retracted configuration.

FIGS. 9A, 9B, and 9C are block diagrams illustrating the process of sensing, via an end effector, data associated with one or more tissues at a target site, notably bioelectric electric properties of one more tissues at the target site, and the subsequent processing of such data (via the controller 107, monitoring system 108, and evaluation/feedback algorithms 110) to determine the type of tissue(s) at the target site and further identify a dielectric relaxation pattern for each of the one or more identified tissue types, and further determining an ablation pattern to be delivered by one or more of the plurality of electrodes of the end effector based on identified dielectric relaxation patterns. The ablation energy associated with the ablation pattern is at a level sufficient to ablate a targeted tissue and minimize and/or prevent collateral damage to surrounding or adjacent non-targeted tissue at the target site.

Aerin Exhibit 1011, Page 326 of 2183
Aerin Medical Inc. v. Neurent Medical Ltd.
IPR2025-01126

It should be noted that, while the block diagrams of FIGS. 9A, 9B, and 9C include reference to end effector 214, other end effector embodiments, including end effector 314, are similarly configured with respect to sensing data associated with at least the presence of neural tissue and other properties of the neural tissue, including neural tissue depth. Accordingly, the following process is not limited to end effector 214.

FIG. 9A is a block diagram illustrating delivery of non-therapeutic energy from electrodes 244 of the end effector at a frequency for sensing one or more properties associated with tissue at a target site in response to the non-therapeutic energy.

As previously described, the handheld treatment device includes an end effector comprising a micro-electrode array arranged about a plurality of struts. For example, end effector 214 includes a plurality of struts 240 that are spaced apart from each other to form a frame or basket 242 when the end effector 214 is in the expanded state. The struts 240 include a plurality of energy delivery elements, such as a plurality of electrodes 244. In the expanded state, each of the plurality of struts is able to conform to and accommodate an anatomical structure at a target site. When positioned, the struts may contact multiple locations along multiple portions of a target site and thereby position one or more electrodes 244 against tissue at a target site. At least a subset of electrodes is configured to deliver non-therapeutic stimulating energy at a frequency/waveform to respective positions at the target site to thereby sense the bioelectric properties of the one or more tissues at the target site, and further convey such data to the console 104. In addition to bioelectric properties, the data may also include at least one of physiological properties and thermal properties of tissue at the target site.

For example, upon delivering non-therapeutic stimulating energy (via one or more electrodes 244) to respective positions, various properties of the tissue at the one or more target sites can be detected. This information can then be transmitted to the console 104, particularly the controller 107, monitoring system 108, and evaluation/feedback algorithms 110 to determine the anatomy at the target site (e.g., tissue types, tissue locations, vasculature, bone structures, foramen, sinuses, etc.), locate a tissue of interest (targeted tissue to receive electric therapeutic stimulation), such as neural tissue, differentiate between different types of neural tissue, and map the anatomical and/or neural structure at the target site. For example, the end effector 214 can be used to detect resistance, complex electrical impedance, dielectric properties, temperature, and/or other properties that indicate the presence of neural fibers and/or other anatomical structures in

Aerin Exhibit 1011, Page 327 of 2183
Aerin Medical Inc. v. Neurent Medical Ltd.
IPR2025-01126

the target region. In certain embodiments, the end effector 214, together with the console 104 components, can be used to determine resistance (rather than impedance) of the tissue (i.e., the load) to more accurately identify the characteristics of the tissue. For example, the evaluation/feedback algorithms 110 can determine resistance of the tissue by detecting the actual power and current of the load (e.g., via the electrodes 244).

In some embodiments, the system 100 provides resistance measurements with a high degree of accuracy and a very high degree of precision, such as precision measurements to the hundredths of an Ohm (e.g., 0.01Ω) for the range of 1-50Ω. The high degree of resistance detection accuracy provided by the system 100 allows for the detection sub-microscale structures, including the firing of neural tissue, differences between neural tissue and other anatomical structures (e.g., blood vessels), and even different types of neural tissue. This information can be analyzed by the evaluation/feedback algorithms 110 and/or the controller 107 and communicated to the operator via a high resolution spatial grid (e.g., on the display 112) and/or other type of display to identify neural tissue and other anatomy at the treatment site and/or indicate predicted neuromodulation regions based on the ablation pattern with respect to the mapped anatomy.

As previously described, in certain embodiments, each electrode 244 can be operated independently of the other electrodes 244. For example, each electrode can be individually activated and the polarity and amplitude of each electrode can be selected by an operator or a control algorithm executed by the controller 107. The selective independent control of the electrodes 244 allows the end effector 214 to detect information (i.e., the presence of neural tissue, depth of neural tissue, and other physiological and bioelectrical properties) and subsequently deliver RF energy to highly customized regions. For example, a select portion of the electrodes 244 can be activated to target specific neural fibers in a specific region while the other electrodes 244 remain inactive. In addition, the electrodes 244 can be individually activated to stimulate or therapeutically modulate certain regions in a specific pattern at different times (e.g., via multiplexing), which facilitates detection of anatomical parameters across a zone of interest and/or regulated therapeutic neuromodulation.

As previously described, the system 100 can identify tissue type of one or more tissues at a target site and further identify a dielectric relaxation pattern for each of the one or more identified tissue types prior to therapy such that the therapeutic stimulation can be applied to

Aerin Exhibit 1011, Page 328 of 2183
Aerin Medical Inc. v. Neurent Medical Ltd.
IPR2025-01126

precise regions including targeted tissue, while avoiding negative effects on non-targeted tissue and structures (e.g., blood vessels). For example, the system 100 can detect various bioelectrical parameters in an interest zone to determine the location and morphology of various tissue types (e.g., different types of neural tissue, neuronal directionality, etc.) and/or other tissue (e.g., glandular structures, vessels, bony regions, etc.). The system 100 is further configured to measure bioelectric potential.

To do so, one or more of the electrodes 244 is placed in contact with an epithelial surface at a region of interest (e.g., a treatment site). Electrical stimuli (e.g., constant or pulsed currents at one or more frequencies, and/or alternating (sine, square, triangle, sawtooth, etc.) wave or direct constant current/power/voltage source at one or more frequencies) are applied to the tissue by one or more electrodes 244 at or near the treatment site, and the voltage and/or current differences based on the wave applied at various different frequencies between various pairs of electrodes 244 of the end effector 214 may be measured to produce a spectral profile or map of the detected bioelectric potential, which can be used to identify different types of tissues (e.g., vessels, neural tissue, and/or other types of tissue) in the region of interest. For example, a fixed current (i.e., direct or alternating current) can be applied to a pair of electrodes 244 adjacent to each other and the resultant voltages and/or currents between other pairs of adjacent electrodes 244 are measured. Conversely, a fixed voltage (i.e. mono or bi-phasic) can be applied to a pair of electrodes 244 adjacent to each other and the resultant current between other pairs of adjacent electrodes 244 are measured. It will be appreciated that the current injection electrodes 244 and measurement electrodes 244 need not be adjacent, and that modifying the spacing between the two current injection electrodes 244 can affect the depth of the recorded signals. For example, closely-spaced current injection electrodes 244 provided recorded signals associated with tissue deeper from the surface of the tissue than further spaced apart current injection electrodes 244 that provide recorded signals associated with tissue at shallower depths. Recordings from electrode pairs with different spacings may be merged to provide additional information on depth and localization of anatomical structures.

Further, complex impedance and/or resistance measurements of the tissue at the region of interest can be detected directly from current-voltage data provided by the bioelectric potential measurements while differing levels of frequency currents are applied to the tissue (e.g., via the end effector 114), and this information can be used to map the neural and anatomical structures

Aerin Exhibit 1011, Page 329 of 2183
Aerin Medical Inc. v. Neurent Medical Ltd.
IPR2025-01126

by the use of frequency differentiation reconstruction. In particular, current-voltage data may be observed with the difference in dielectric and conductive properties of tissue type when different levels of current frequencies are applied.

Furthermore, applying the stimuli at different frequencies will target different stratified layers or cellular bodies or clusters, which can further be used to identify specific tissue type and respective dielectric relaxation phenomena/behavior of the identified tissue types.

For example, different tissue types include different physiological and histological characteristics (e.g., cell components, extracellular proteins, etc.). As a result of the different characteristics, different tissue types have different associated bioelectrical properties and thus exhibit different associated behavior in response to application of energy applied thereto. It should be noted that active bioelectrical properties may generally include the influx and outflux of ions into and out of a cell, while passive bioelectrical properties may include resistive, capacitive, and inductive properties of the cell. One such behavior is referred to as dielectric relaxation phenomena. The energy conduction behavior of tissue differs with frequency/energy applied as tissue passive electrical components activate and de-active depending on frequency applied. This switching action of activating and deactivating of these electrically passive components depends on the energy and frequency applied is known as relaxation phenomena. This relaxation can take place either on ionic or dielectric or atomic or electronic level (highly dependent on frequency). For example, the ionic resistive component of a tissue is relative to active more than capacitive or inductive component of the tissue and, in dielectric, the capacitive component is relatively more active than resistive component.

As a result, the relaxation phenomena of a given tissue occurs at a particular electrical frequency in which the membranes of cells of the given tissue become permeable to thereby allow electrical stimulation current (at the particular frequency) to flow through the membrane to thereby elicit a desired effect upon the tissue. When a tissue is not exhibiting the dielectric relaxation phenomena (i.e., when electrical stimulation current is tuned to a different frequency that does not correlate to the dielectric relaxation phenomena), the membranes of cells of the given tissue are not permeable to that specific electrical stimulation current and thus do not elicit an effect.

For example, at relatively high signal frequencies (e.g., electrical injection or stimulation), for example, cell membranes of neural tissue do not impede current flow, and the

Aerin Exhibit 1011, Page 330 of 2183
Aerin Medical Inc. v. Neurent Medical Ltd.
IPR2025-01126

current passes directly through the cell membranes. In this case, the resultant measurement (e.g., impedance, resistance, capacitance, and/or induction) is a function of the intracellular and extracellular tissue and liquids. At low signal frequencies, the membranes impede current flow to provide different defining characteristics of the tissues, such as the shapes and morphologies of the cells, cell density and/or cell spacing. The stimulation frequencies can be in the megahertz range, in the kilohertz range (e.g., 400-500 kHz, 450-480 kHz, etc.), in the hertz range (e.g., 0.2-0.8 Hz, 8-12 Hz, etc.), and/or other frequencies attuned to the tissue being stimulated and the characteristics of the device being used. The detected complex impedance or resistances levels from the zone of interest can be displayed to the user (e.g., via the display 112) to visualize certain structures based on the stimulus frequency.

Further, the inherent morphology and composition of the anatomical structures within a given region or zone of a patient's body react differently to different frequencies and, therefore, specific frequencies can be selected to identify very specific structures. For example, the morphology or composition of targeted structures for anatomical mapping may depend on whether the cells of tissue or other structure are membranonic, stratified, and/or annular. In various embodiments, the applied stimulation signals can have predetermined frequencies attuned to specific neural tissue, such as the level of myelination and/or morphology of the myelination. For example, second axonal parasympathetic structures are poorly myelinated than sympathetic nerves or other structures and, therefore, will have a distinguishable response (e.g., complex impedance, resistance, etc.) with respect to a selected frequency than sympathetic nerves. Accordingly, applying signals with different frequencies to the target site can distinguish the targeted parasympathetic nerves from the non-targeted sensory nerves, and therefore provide highly specific target sites for neural mapping before or after therapy and/or neural evaluation post-therapy.

In some embodiments, the neural and/or anatomical mapping includes measuring data at a region of interest with at least two different frequencies to identify certain anatomical structures such that the measurements are taken first based on a response to an injection signal having a first frequency and then again based on an injection signal having a second frequency different from the first. For example, there are two frequencies at which hypertrophied (i.e., disease-state characteristics) sub-mucosal targets have a different electrical conductivity or permittivity compared to "normal" (i.e., healthy) tissue. Complex conductivity may be

Aerin Exhibit 1011, Page 331 of 2183
Aerin Medical Inc. v. Neurent Medical Ltd.
IPR2025-01126

determined based on one or more measured physiological parameters (e.g., complex impedance, resistance, dielectric measurements, dipole measurements, etc.) and/or observance of one or more confidently known attributes or signatures. Furthermore, the system 100 can also apply neuromodulation energy via the electrodes 244 at one or more predetermined frequencies attuned to a target neural structure to provide highly targeted ablation of the selected neural structure associated with the frequency(ies). This highly targeted neuromodulation also reduces the collateral effects of neuromodulation therapy to non-target sites/structures (e.g., blood vessels) because the targeted signal (having a frequency tuned to a target neural structure) will not have the same modulating effects on the non-target structures.

Accordingly, passive bioelectric properties, such as complex impedance and resistance, can be used by the system 100 before, during, and/or after neuromodulation therapy to guide one or more treatment parameters. For example, before, during, and/or after treatment, impedance or resistance measurements may be used to confirm and/or detect contact between one or more electrodes 244 and the adjacent tissue. The impedance or resistance measurements can also be used to detect whether the electrodes 244 are placed appropriately with respect to the targeted tissue type by determining whether the recorded spectra have a shape consistent with the expected tissue types and/or whether serially collected spectra were reproducible. In some embodiments, impedance or resistance measurements may be used to identify a boundary for the treatment zone (e.g., specific neural tissue that are to be disrupted), anatomical landmarks, anatomical structures to avoid (e.g., vascular structures or neural tissue that should not be disrupted), and other aspects of delivering energy to tissue.

The bioelectric information can be used to produce a spectral profile or map of the different anatomical features tissues at the target site, and the anatomical mapping can be visualized in a 3D or 2D image via the display 112 and/or other user interface to guide the selection of a suitable treatment site. This neural and anatomical mapping allows the system 100 to accurately detect and therapeutically modulate neural fibers associated with certain neurological conditions or disorders to be treated. In addition, anatomical mapping also allows the clinician to identify certain structures that the clinician may wish to avoid during therapeutic neural modulation (e.g., certain arteries). The neural and anatomical bioelectric properties detected by the system 100 can also be used during and after treatment to determine the real-time effect of the therapeutic neuromodulation on the treatment site. For example, the

Aerin Exhibit 1011, Page 332 of 2183
Aerin Medical Inc. v. Neurent Medical Ltd.
IPR2025-01126

evaluation/feedback algorithms 110 can also compare the detected neural locations and/or activity before and after therapeutic neuromodulation, and compare the change in neural activity to a predetermined threshold to assess whether the application of therapeutic neuromodulation was effective across the treatment site.

FIG. 9B is a block diagram illustrating communication of sensor data from the handheld device 102 to the controller and subsequent tuning, via the controller, of energy output based on the sensor data for precision targeting of tissue of interested and to be treated. As shown, the end effector 214 communicates the tissue data (i.e., bioelectric properties of tissue at the target site) to the console 104. The bioelectric properties may include, but are not limited to, complex impedance, resistance, reactance, capacitance, inductance, permittivity, conductivity, dielectric properties, muscle or nerve firing voltage, muscle or nerve firing current, depolarization, hyperpolarization, magnetic field, induced electromotive force, and combinations thereof. The dielectric properties may include, for example, at least a complex relative dielectric permittivity.

In turn, console 104 (via the controller 107, monitoring system 108, and evaluation/feedback algorithms 110) is configured to process such data and determine a type of tissue at the target site, as well as other properties, including a dielectric relaxation pattern for each of the one or more identified tissue types. The console 104 (via the controller 107, monitoring system 108, and evaluation/feedback algorithms 110) is further configured to determine an ablation pattern to be delivered by one or more of the plurality of electrodes of the end effector based on identified dielectric relaxation patterns. The ablation energy associated with the ablation pattern is at a level sufficient to ablate a targeted tissue and minimize and/or prevent collateral damage to surrounding or adjacent non-targeted tissue at the target site. More specifically, the console 104 (via the controller 107, monitoring system 108, and evaluation/feedback algorithms 110) is configured to tune energy output (i.e., delivery of electrical therapeutic stimulation) based on the dielectric relaxation pattern of a tissue of interest such that the energy delivered is at a specific frequency configured to target the tissue of interest while avoiding the non-targeted tissue (i.e., the energy is tuned to a frequency level associated with the dielectric relaxation phenomena of the targeted tissue only thereby penetrate the cell membranes of the targeted tissue).

The console 104 (via the controller 107, monitoring system 108, and evaluation/feedback algorithms 110) is generally configured to determine/calculate a dielectric relaxation pattern of a

Aerin Exhibit 1011, Page 333 of 2183
Aerin Medical Inc. v. Neurent Medical Ltd.
IPR2025-01126

given identified tissue type based on an algorithm utilizing complex relative dielectric permittivity calculations in empirical modeling of relaxation phenomena.

For example, by way of background, a dielectric material is an electrical insulator that can be polarized by an applied electric field. When a dielectric material is placed in an electric field, electric charges do not flow through the material as they do in an electrical conductor, but only slightly shift from their average equilibrium positions causing dielectric polarization. Because of dielectric polarization, positive charges are displaced in the direction of the field and negative charges shift in the direction opposite to the field (for example, if the field is moving in the positive x-axis, the negative charges will shift in the negative x-axis). As a result, dielectric polarization creates an internal electric field that reduces the overall field within the dielectric itself. If a dielectric is composed of weakly bonded molecules, those molecules not only become polarized, but also reorient so that their symmetry axes align to the field.

Accordingly, biological tissue, most notably cells of biological tissue, can essentially be modeled as capacitors with dielectric properties. For example, the phospholipid bilayer of a cell membrane can resemble a parallel-plate capacitor, such that, depending on the frequency applied, a cell membrane will allow an electrical charge/current to flow through. Adding a dielectric allows the capacitor to store more charge for a given potential difference. For example, when a dielectric is inserted into a charged capacitor to increase the capacitance of the capacitor, the dielectric is polarized by the field. The electric field from the dielectric will partially cancel the electric field from the charge on the capacitor plates.

The resulting concepts of relative dielectric permittivity and dielectric constant can be used to further determine complex relative dielectric permittivity of a tissue for the subsequent calculation of dielectric relaxation phenomena of a given tissue. The dielectric constant or relative dielectric permittivity, is understood by the following formula:

$$\kappa = \varepsilon_r = \frac{\varepsilon_m}{\varepsilon_0}$$

Dielectric permittivity (ε) is the ability of a substance to hold an electrical charge and is a function of frequency, temperature, humidity and other physical parameters. The dielectric constant (κ), also referred to as relative dielectric permittivity (ε_r), is the ratio of the permittivity of a substance to free space. In the above formula, ε_m is the complex frequency-dependent permittivity of the material and ε_0 is the vacuum permittivity. The value of ε_0 is $8.85418782 \times$

Aerin Exhibit 1011, Page 334 of 2183
Aerin Medical Inc. v. Neurent Medical Ltd.
IPR2025-01126

$10^{-12}\ m^{-3}\ kg^{-1}\ s^4\ A^2$. Many materials have an ε or κ. For example, the κ or ε_r of air is 1, of water is approximately 80, of glass is between 5 and 10, of paper is between 2 and 4, and of body tissue is approximately 8 at a frequency of 1kHz and at room temperature of 20 degrees Celsius (°C).

By knowing the relative dielectric permittivity of a material, the complex relative dielectric permittivity may be obtained. The complex relative dielectric permittivity is understood by the following formula:

$$\varepsilon_r = \varepsilon'_r - j\varepsilon''_r$$

where ε_r is the relative dielectric permittivity, or dielectric constant, ε'_r is the real part of the complex dielectric constant, ε''_r is the imaginary part of the complex dielectric constant, and j is the imaginary constant. The real part (ε'_r) of the relative dielectric permittivity or dielectric constant defines the polarization capability of the material. The imaginary part (ε''_r) of the relative dielectric permittivity or dielectric constant defines the loss of the material (ionic loss at low frequency around mHz to Hz range, dielectric heat loss at kHz to MHz range, atomic loss and electronic loss at higher frequencies) and the conducting behavior of the polymer. At low to middle frequency range, relaxation phenomena or behavior occurs when the dielectric material starts leaking charge or heat loss at a particular frequency, where the imaginary part of the dielectric constant becomes more dominant compared to that of the real part of the dielectric constant.

Certain parameters can be extracted from complex relative dielectric permittivity of a given tissue, including, for example, loss tangent (also referred to as dielectric loss) with respect to impedance measurements of a tissue. Dielectric loss quantifies a dielectric material's inherent dissipation of electromagnetic energy (e.g. heat). It can be parameterized in terms of either the loss angle δ or the corresponding loss tangent tan δ (i.e., loss tangent). Both refer to the phasor in the complex plane whose real and imaginary parts are the resistive (lossy) component of an electromagnetic field and its reactive (lossless) counterpart. Loss tangent is defined as:

$$\tan\delta = \frac{\varepsilon''_r}{\varepsilon'_r}$$

where δ always refers to the angle of complex dielectric permittivity and θ always refers to impedance phase angle, so $\tan\theta = X_c/R$. X_c is the reactive part of complex impedance and R is

Aerin Exhibit 1011, Page 335 of 2183
Aerin Medical Inc. v. Neurent Medical Ltd.
IPR2025-01126

the real part of impedance. The relationship between loss tangent tan δ and impedance phase angle θ is: $\delta = 90° - \theta$. Accordingly:

$$\tan\delta = \cot\theta = \frac{1}{2\pi R_p C_p}$$

As previously described, the console 104 (via the controller 107, monitoring system 108, and evaluation/feedback algorithms 110) is generally configured to determine/calculate a dielectric relaxation pattern of a given identified tissue type based on an algorithm utilizing complex relative dielectric permittivity calculations in empirical modeling of relaxation phenomena. In some embodiments, the calculation of the dielectric relaxation pattern of a given identified tissue is based, at least in part, on the Havriliak–Negami relaxation model. The Havriliak–Negami relaxation is an empirical modification of the Debye relaxation model in electromagnetism. Unlike the Debye model, the Havriliak–Negami (HN) relaxation accounts for the asymmetry and broadness of the dielectric dispersion curve. The model was first used to describe the dielectric relaxation of some polymers, by adding two exponential parameters to the Debye equation:

$$\varepsilon^* = \varepsilon_\infty + (\varepsilon_0 - \varepsilon_\infty) \times \frac{1}{[1 + (i\omega\tau)^{1-\alpha_{HN}}]^{\beta_{HN}}} - \frac{i\sigma_{dc}}{\varepsilon_0 \omega^s}$$

where ε_∞ and ε_0 represent the total dielectric permittivity at high frequency and low frequency respectively. i is the characteristic complex number $\sqrt{-1}$, ω is the angular frequency (where $\omega = 2\pi f$), τ is the relaxation time and is given by $1/2\pi f_{max}$, f_{max} is the peak frequency of loss modulus and α_{HN} and β_{HN} are shaped characteristics of the fitted curve which describe width and asymmetry of loss peak respectively where $0 \leq \alpha_{HN}, \beta_{HN} \leq 1$. The fitting parameters become 1 for purely ohmic conductivity and decrease with electrode polarization. The parameter $\varepsilon_0 - \varepsilon_\infty$ denotes the dielectric strength (Δε) of nanocomposites. The exponents, α and β, describe the asymmetry and broadness of the corresponding spectra. where $\alpha_{HN}=0$ the HN model reduces to the Cole –Davidson model. The HN relaxation model proposes that the real and imaginary parts of the complex relative permittivity can be expressed as a function of ω (angular frequency) and α and β, as follows:

Aerin Exhibit 1011, Page 336 of 2183
Aerin Medical Inc. v. Neurent Medical Ltd.
IPR2025-01126

$$\varepsilon' = \varepsilon_\infty + (\varepsilon_0 - \varepsilon_\infty) \times \frac{\cos(\beta_{HN}\theta)}{\left[1 + 2(\omega\tau_{HN})^{1-\alpha_{HN}} \sin\left(\frac{\alpha_{HN}\pi}{2}\right) + (\omega\tau)^{2(1-\alpha)}\right]^{\frac{\beta}{2}}}$$

$$\varepsilon'' = (\varepsilon_0 - \varepsilon_\infty) \times \frac{\sin(\beta_{HN}\theta)}{\left[1 + 2(\omega\tau_{HN})^{1-\alpha_{HN}} \sin\left(\frac{\alpha_{HN}\pi}{2}\right) + (\omega\tau)^{2(1-\alpha)}\right]^{\frac{\beta}{2}}}$$

and

$$\theta = \tan^{-1} \frac{(\omega\tau)^{1-\alpha_{HN}} \cos\left(\frac{\alpha_{HN}\pi}{2}\right)}{1 + (\omega\tau)^{1-\alpha_{HN}} \sin\left(\frac{\alpha_{HN}\pi}{2}\right)}$$

Based on the above formulas, calculation of ε'_r and ε''_r as a function of ω (angular frequency) from the data using a capacitance equation, as well as dimensions of the electrodes, for example.

It should be noted that, in some embodiments, the system 100 may include a database 400 containing a plurality of profiles 402(1)-402(n) of identified and known tissue types, wherein each profile may include electric signature data for the associated tissue type. The electric signature data may generally include previously identified bioelectric properties of the tissue type and previously identified dielectric relaxation pattern, and the associated frequency at which the tissue type exhibits different dielectric/MWS/loss factor relaxation and or dielectric relaxation phenomena/behaviors. Accordingly, the console 104 (via the controller 107, monitoring system 108, and evaluation/feedback algorithms 110) is configured to process data received from the end effector 114 (i.e., bioelectric properties of one or more tissues at the target site) and determine a type of tissue at the target site a dielectric relaxation pattern for each of the one or more identified tissue types based on a comparison of the data with the electric signature data stored in each of the profiles 402. Upon a positive correlation between data sets, the console 104 is configured to identify a matching profile and thus determine the one or more tissue types at the target site and the respective relaxation and conductivity patterns of each so as to identify an accurate ablation pattern for limiting treatment to that of the targeted tissue.

Aerin Exhibit 1011, Page 337 of 2183
Aerin Medical Inc. v. Neurent Medical Ltd.
IPR2025-01126

As generally understood, in dielectric spectroscopy, large frequency dependent contributions to the dielectric response, especially at low frequencies, may come from build-ups of charge. This Maxwell-Wagner-Sillar polarization, occurs either at inner dielectric boundary layers on a mesoscopic scale, or at the external electrode-sample interface on a macroscopic scale. In both cases this leads to a separation of charges (such as through a depletion layer). The charges are often separated over a considerable distance (relative to the atomic and molecular sizes), and the contribution to dielectric loss can therefore be orders of magnitude larger than the dielectric response due to molecular fluctuations.

Maxwell-Wagner-Sillar polarization (also referred to as the Maxwell-Wagner effect) processes are taken into account during the investigation of inhomogeneous materials like suspensions or colloids, biological materials, phase separated polymers, blends, and crystalline or liquid crystalline polymers. The Maxwell–Wagner effect accounts for charge accumulation at the two-material interface on the basis of the difference of charge carrier relaxation times in these two materials. Macroscopically, basic electrical properties of materials are specified using two physical parameters, dielectric constant ϵ and conductivity σ. The ratio of these two parameters, $\tau=\varepsilon/\sigma$. The simplest model for describing an inhomogenous structure is a double layer arrangement, where each layer is characterized by its permittivity ε'_1, ε'_2 and its conductivity σ_1, σ_2. The relaxation time for such an arrangement is given by:

$$\tau_{MW} = \epsilon_0 \frac{\epsilon_1 + \epsilon_2}{\sigma_1 + \sigma_2}$$

Importantly, since the materials' conductivities are in general frequency dependent, this shows that the double layer composite generally has a frequency dependent relaxation time even if the individual layers are characterized by frequency independent permittivities.

The system 100 of the present invention may utilize Maxwell-Wagner-Sillar (MWS) relaxation model to confirm the target frequencies (frequencies at which relaxation phenomena occurs) of identified tissues. As previously described, relaxation phenomena is important in understanding changes in electric behavior of tissues under different frequencies conditions. At molecular dynamics level, dielectric spectroscopy has proven to be a more improved technique compared to other measurement techniques including Nuclear Magnetic Resonance (NMR), Small angle X-ray scattering (SAXS), Dynamic Mechanical Analysis (DMA), Quasi-elastic light

Aerin Exhibit 1011, Page 338 of 2183
Aerin Medical Inc. v. Neurent Medical Ltd.
IPR2025-01126

scattering and neutron scattering. Cooperative relaxation and Maxwell-Wagner-Sillar (MWS) polarization are the two types of relaxation phenomenon found in biological tissue at low frequency range. Cooperative relaxation occurs due to the relaxation of the backbone chain of biopolymers and is generally termed as glass transition relaxation of those biopolymers. Maxwell-Wagner-Sillar (MWS) relaxation occurs generally at a very low frequency in biological tissues due to charge trapping at the interface of materials having different permittivity-based molecules. Frequency-based MWS are hard to find using imaginary dielectric permittivity. However, electric modulus, an inverse of dielectric permittivity, ε_r, can be used to define different relaxation especially MWS and crystalline loss in polymer and nanocomposites. Mathematically, it is presented by the following:

$$M^* = 1/\varepsilon_r = 1/(\varepsilon^{'} - i\varepsilon^{"}) = \varepsilon^{'}/(\varepsilon^{'2} + \varepsilon^{"2}) + j\varepsilon^{"}/(\varepsilon^{'2} + \varepsilon^{"2}) = M^{'} + jM^{"}$$

where $M^{'}$ and $M^{"}$ are the real and imaginary component of electric modulus, which is analogous to the shear modulus. $\varepsilon^{'}$ and $\varepsilon^{"}$ are real and img. dielectric permittivity of biological tissue.

FIG. 9C is a block diagram illustrating delivery of energy to the target site tuned to a specific frequency to elicit dielectric relaxation phenomena/behavior in the targeted tissue (based on the ablation pattern output from the controller). The level of energy output from the end effector may be at a therapeutic energy level sufficient to therapeutically modulate (e.g. ablate) the targeted tissue while minimizing and/or preventing damage to a surrounding or adjacent non-targeted tissue or structure. In particular, energy to be delivered from the end effector is tuned to a target frequency associated with a specific relaxation pattern of the targeted tissue. The target frequency is a frequency at which the targeted tissue exhibits near relaxation phenomena behavior and the non-targeted tissue does not exhibit relaxation phenomena behavior. In particular, delivery of the ablation energy, tuned to the target frequency, penetrates (passes through) a membrane of one or more cells associated only with the targeted tissue, while passing around cell membranes of non-targeted tissue and structures at the target site.

For example, in some embodiments, the condition to be treated may include a peripheral neurological condition. The peripheral neurological condition may be associated with a nasal condition, such as rhinosinusitis. Accordingly, in some embodiments, the target site is within a

Aerin Exhibit 1011, Page 339 of 2183
Aerin Medical Inc. v. Neurent Medical Ltd.
IPR2025-01126

sino-nasal cavity (e.g., proximate or inferior to a sphenopalatine foramen) of the patient and the targeted tissue is neural tissue associated with rhinosinusitis (i.e., neural tissue innervating mucus producing and/or mucosal engorgement elements within the sino-nasal cavity). As a result, the ablation energy associated with the ablation pattern is at a level sufficient to ablate a targeted tissue (i.e., neural tissue) and minimize and/or prevent collateral damage to surrounding or adjacent non-targeted tissue at the target site. More specifically, as illustrated in FIG. 10, the energy output (i.e., delivery of electrical therapeutic stimulation) is based on the dielectric relaxation pattern of a tissue of interest (i.e., neural tissue in this instance) such that the energy delivered is at a specific frequency configured to target the tissue of interest while avoiding the non-targeted tissue (i.e., the energy is tuned to a frequency level associated with the dielectric relaxation phenomena of the targeted tissue only thereby penetrate the cell membranes of the targeted tissue).

FIG. 10 is a block diagram illustrating delivery of energy to the target site, and specifically illustrating flow of current through membranes of cells of the targeted tissue (near relaxation phenomena/behavior) and flow of current around membranes of cells of non-targeted tissue (which is not exhibiting nearby relaxation phenomena/behavior) as a result of the energy being tuned to a target frequency.

The delivery of the ablation energy may result in disruption of multiple neural signals to, and/or result in local hypoxia of, mucus producing and/or mucosal engorgement elements within the sino-nasal cavity of the patient. Yet still, delivery of the ablation energy may result in therapeutic modulation of postganglionic parasympathetic nerves innervating nasal mucosa at foramina and or microforamina of a palatine bone of the patient. In particular, delivery of the ablation energy causes multiple points of interruption of neural branches extending through foramina and microforamina of palatine bone. Yet still, in some embodiments, delivery of the ablation energy may cause thrombus formation within one or more blood vessels associated with mucus producing and/or mucosal engorgement elements within the nose. The resulting local hypoxia of the mucus producing and/or mucosal engorgement elements may result in decreased mucosal engorgement to thereby increase volumetric flow through a nasal passage of the patient.

Accordingly, the electrical stimulating energy can be applied to the tissue of interest in a highly targeted manner and elicit the desired effect (i.e., neuromodulation, ablation, lesion formation, etc.) to selectively modulate the targeted tissue, while avoiding non-targeted tissue or

Aerin Exhibit 1011, Page 340 of 2183
Aerin Medical Inc. v. Neurent Medical Ltd.
IPR2025-01126

structures (which may include vital organs or tissues, such as blood vessels) and allowing the surrounding tissue structure to remain healthy for effective wound healing.

In that manner, the present invention solves the problem of causing unnecessary collateral damage to non-targeted tissue during a procedure involving the application of electrotherapeutic stimulation at a target site composed of a variety of tissue types. In particular, the systems and methods are able to, prior to treatment, characterize and identify tissue types and further identify specific levels of energy (i.e., specific target frequencies) to be delivered so as to cause only those intended, targeted tissues to exhibit nearby relaxation phenomena and thus receive the energy for treatment, while non-targeted tissues remain intact and avoid collateral damage.

It should further be noted that, with reference to FIG. 9C, the end effector 114 can continue to sense tissue properties during and/or after treatment. Such sensed data from the end effector 214 can further include feedback data associated with the effect of the stimulating energy at the therapeutic level on targeted tissue at any given location. For example, feedback data (sensed during therapeutic neuromodulation of neural tissue) may be associated with efficacy of ablation of the targeted tissue during and/or after delivery of initial energy from one or more of the plurality of electrodes 244. Accordingly, in certain embodiments, the console 104 (via the controller 107, monitoring system 108, and evaluation/feedback algorithms 110) is configured to process such feedback data to determine if certain properties of the targeted tissue undergoing treatment (i.e., tissue temperature, tissue impedance, etc.) reach predetermined thresholds for irreversible tissue damage.

The electrodes 244 are configured to be independently controlled and activated by the controller 107 (in conjunction with the evaluation/feedback algorithms 110) to thereby deliver energy independent of one another. Accordingly, the controller 107 can tune energy output individually for the one or more electrodes 244 after an initial level of energy has been delivered based, at least in part, on feedback data. For example, once the threshold is reached, the application of therapeutic stimulation energy can be terminated to allow the tissue to remain intact. In other embodiments, if the threshold has not been reached, the controller can maintain, reduce, or increase energy output to a given electrode 244 until such threshold is reached. Accordingly, the energy delivery of any given electrode 244 can automatically be tuned based on an evaluation/feedback algorithm (e.g., the evaluation/feedback algorithm 110 of FIG. 1A)

Aerin Exhibit 1011, Page 341 of 2183
Aerin Medical Inc. v. Neurent Medical Ltd.
IPR2025-01126

stored on a console (e.g., the console 104 of FIG. 1A) operably coupled to the end effector 214. For example, at least some of the electrodes 244 may have different levels of energy to be delivered at respective positions sufficient to ablate neural tissue at the respective positions based on the feedback data received for the respective locations.

For example, in some embodiments, the controller 107 is configured to tune energy output from each of the plurality of electrodes 244 after an initial level of energy has been delivered based, at least in part, on feedback data received. The feedback data may be associated with efficacy of ablation of the neural tissue at each position during and/or after delivery of initial energy from each of the plurality of electrodes. The feedback data includes one or more properties associated with neural tissue at respective positions. The one or more properties may include, but are not limited to, physiological properties, bioelectric properties, and thermal properties. For example, the active and passive bioelectric properties may include, but are not limited to, complex impedance, resistance, reactance, capacitance, inductance, complex, real and imaginary permittivity, conductivity, nerve firing voltage, nerve firing current, depolarization, hyperpolarization, magnetic field, and induced electromotive force.

FIG. 11 is a flow diagram illustrating one embodiment of a method 500 for treating a condition. The condition may include, for example, a peripheral neurological condition of a patient. The method 500 includes providing a device comprising an end effector including a plurality of electrodes and a controller operably associated with the device (operation 510). The method 500 further includes positioning the end effector at a target site associated with a patient (operation 520) and receiving, via the controller, data from the device associated with bioelectric properties of one or more tissues at the target site (operation 530).

The bioelectric properties may include, but are not limited to, complex impedance, resistance, reactance, capacitance, inductance, permittivity, conductivity, dielectric properties, muscle or nerve firing voltage, muscle or nerve firing current, depolarization, hyperpolarization, magnetic field, induced electromotive force, and combinations thereof. The dielectric properties may include, for example, at least a complex relative dielectric permittivity. It should be noted that, in some embodiments, a subset of the plurality of electrodes is configured to deliver non-therapeutic stimulating energy at a frequency/waveform to respective positions at the target site to thereby sense the bioelectric properties of the one or more tissues at the target site.

Aerin Exhibit 1011, Page 342 of 2183
Aerin Medical Inc. v. Neurent Medical Ltd.
IPR2025-01126

The method 500 further includes processing, via the controller, the data to identify a type of each of the one or more tissues at the target site and further identify a dielectric relaxation pattern for each of the one or more identified tissue types (operation 540).

The processing of the data may include, for example: a) comparing the data received from the device with electric signature data associated with a plurality of known tissue types; and (b) use of (i) a supervised and/or (ii) an unsupervised trained neural network. For example, the controller may be configured to compare the tissue data (i.e., data received from the treatment device associated with tissue at the target site) with profiles of known tissue types stored in a database, for example. Each profile may generally include electric signature data that generally characterizes a known tissue type, including physiological, histological, and bioelectric properties of a known tissue type, including different relaxation phenomena/behavior of the tissue and the specific frequency value at which the tissue exhibits these relaxation phenomena/behavior.

The method 500 further includes determining, via the controller, an ablation pattern to be delivered by one or more of the plurality of electrodes of the end effector based on identified dielectric relaxation patterns. The ablation energy associated with the ablation pattern is at a level sufficient to ablate a targeted tissue and minimize and/or prevent collateral damage to surrounding or adjacent non-targeted tissue at the target site (operation 550). The ablation energy is tuned to a target frequency associated with a relaxation pattern of the targeted tissue. The target frequency comprises a frequency at which the targeted tissue exhibits relaxation phenomena behavior and the non-targeted tissue does not exhibit relaxation phenomena behavior. In particular, delivery of the ablation energy, tuned to the target frequency, penetrates the plasma membrane of one or more cells associated only with the targeted tissue.

In some embodiments, the condition includes a peripheral neurological condition. The peripheral neurological condition may be associated with a nasal condition or a non-nasal condition of the patient. For example, the non-nasal condition may include atrial fibrillation (AF). In some embodiments, the nasal condition may include rhinosinusitis. Accordingly, in some embodiments, the target site is within a sino-nasal cavity of the patient. The delivery of the ablation energy may result in disruption of multiple neural signals to, and/or result in local hypoxia of, mucus producing and/or mucosal engorgement elements within the sino-nasal cavity of the patient. The targeted tissue is proximate or inferior to a sphenopalatine foramen. Yet still,

Aerin Exhibit 1011, Page 343 of 2183
Aerin Medical Inc. v. Neurent Medical Ltd.
IPR2025-01126

delivery of the ablation energy may result in therapeutic modulation of postganglionic parasympathetic nerves innervating nasal mucosa at foramina and or microforamina of a palatine bone of the patient. In particular, delivery of the ablation energy causes multiple points of interruption of neural branches extending through foramina and microforamina of palatine bone. Yet still, in some embodiments, delivery of the ablation energy may cause thrombus formation within one or more blood vessels associated with mucus producing and/or mucosal engorgement elements within the nose. The resulting local hypoxia of the mucus producing and/or mucosal engorgement elements may result in decreased mucosal engorgement to thereby increase volumetric flow through a nasal passage of the patient.

FIG. 12 is a schematic of an exemplary probe/electrode setup for performing some of the methods described herein, most notably for characterizing tissue at a target site by sensing bioelectric properties of tissue, wherein such characterization includes identifying specific types of tissue present and further determining a dielectric relaxation phenomena/behavior pattern for the identified types of tissue.

FIG. 12A is a schematic diagram of one embodiment of a 3-probe/electrode system for sensing bioelectric properties of tissue for subsequent characterization of tissue at a target site, wherein such characterization includes identifying specific types of tissue present and further determining a dielectric relaxation phenomena/behavior pattern for the identified types of tissue.

It should be noted that, while the diagrams of FIGS. 12 and 12A illustrate a 3-probe/electrode system, the systems and methods of the present invention may include any number of probes/electrodes for obtaining bioelectric data from tissue of interest (either targeted tissue or non-targeted tissue) for the purposes of determining dielectric relaxation phenomena/behavior patterns or other properties, as described herein. For example, experimental setups may include the use of 2, 3, 4, or more probes/electrodes.

Referring to FIGS. 12 and 12A, the experimental setup includes a 3-electrode assembly (a reference electrode, a counter electrode, and an active working electrode). Such a setup which includes the 3-probe/electrode assembly is used to obtain dielectric properties of various tissue types, wherein such data is described in greater detail herein with reference to FIGS. 13, 14, 15, and 16.

FIGS. 13A and 13B are graphs illustrating dielectric properties of two tissue types (spinal cord and muscle tissues), including the plotting of loss tangent value relative to frequency (FIG.

Aerin Exhibit 1011, Page 344 of 2183
Aerin Medical Inc. v. Neurent Medical Ltd.
IPR2025-01126

13A) and the plotting of an imaginary electric modulus relative to frequency (FIG. 13B). As illustrated, the relaxation phenomena/behavior is generally observed around 10 kHz earlier for nervous tissue as compared to muscle tissue.

FIGS. 14A-14H are graphs illustrating the plotting of real and imaginary values of the complex relative permittivity (based on the Havriliak–Negami (HN) relaxation phenomena model) relative to frequency for the two tissue types of FIGS. 13A and 13B (spinal cord and muscle tissues).

FIGS. 14A and 14B illustrate plotting of real and imaginary values of the complex relative permittivity relative to frequency for upper spinal cord tissue. FIGS. 14C and 14D illustrate plotting of real and imaginary values of the complex relative permittivity relative to frequency for lower spinal cord tissue. FIGS. 14E and 14F are graphs illustrating the plotting of real and imaginary values of the complex relative permittivity relative to frequency for lower back muscle tissue. FIGS. 14G and 14H are graphs illustrating the plotting of real and imaginary values of the complex relative permittivity relative to frequency for upper back muscle tissue.

Below is a table (Table 1) providing the specific data points for each of the tissues with respect to the real and imaginary dielectric permittivity values or specific HN relaxation parameters obtained for specific tissue types when data obtained from 10 kHz to 80 kHz are trained.

TABLE 1

Tissue Type	Parameters	Value	Standard Error
Upper Spinal Cord	α	0	0.008
	β	0.875	0.009
	f0	1012.70	130.20
	$\varepsilon 0$-$\varepsilon\infty$	5.811E7	6.12E6
	$\varepsilon\infty$	431140.35	26246.9
Lower Spinal Cord	α	0.011	0.01
	β	0.98	0.01
	f0	2629.47	208.63
	$\varepsilon 0$-$\varepsilon\infty$	1.72E7	1.0E6
	$\varepsilon\infty$	375317.95	25581.28
Lower Back Muscle	α	0	0.004

Aerin Exhibit 1011, Page 345 of 2183
Aerin Medical Inc. v. Neurent Medical Ltd.
IPR2025-01126

	β	0.72	0.004
	f0	63.23	81.80
	ε0-ε∞	3.15E8	2.89E8
	ε∞	241267.91	18021.86
Upper Back Muscle	α	0	0.00467
	β	0.71561	0.0044
	f0	63.16	81.80
	ε0-ε∞	3.1E8	2.9E8
	ε∞	241256.79	18021.68

It was observed that HN relaxation frequency of upper spinal cord occurs around 1 kHz when two independent equations of real and imaginary dielectric permittivity values are trained for 10 kHz to 80 kHz. It was further observed that HN relaxation of lower spinal cord occurs around 2.6 kHz when two independent equation of real and imaginary dielectric permittivity value are trained for 10 kHz to 80 kHz.

A notable feature of spinal cord is that the conduction behavior is ohmic conductivity when data is train between 10 kHz to 80 kHz as the fitting parameter α is near to 0 and β is near to 1. FIGS. 15A and 15B are graphs illustrating dielectric properties of different portions of a tissue (turbinate tissue), including the plotting of loss tangent value relative to frequency (FIG. 15A) and the plotting of an imaginary electric modulus relative to frequency (FIG. 15B). The different portions of turbinate include an end of the turbinate, center of the turbinate, and portions of the turbinate adjacent to blood vessels. From the data observed (based on peak of tan delta and relaxation), only the center of turbinate appeared to follow the relaxation behavior of nervous tissue, as the center of the turbinate generally includes a bundle of nervous tissue, similar in nature to the lower spinal cord.

FIGS. 16A-16F are graphs illustrating the plotting of real and imaginary values of the complex relative permittivity (based on the HN relaxation phenomena) relative to frequency for the different portions of the turbinate tissue of FIGS. 15A and 15B.

FIGS. 16A and 16B illustrate plotting of real and imaginary values of the complex relative permittivity relative to frequency for the end of a turbinate tissue. FIGS. 16C and 16D illustrate plotting of real and imaginary values of the complex relative permittivity relative to

Aerin Exhibit 1011, Page 346 of 2183
Aerin Medical Inc. v. Neurent Medical Ltd.
IPR2025-01126

frequency for the center of the turbinate tissue. FIGS. 16E and 16F are graphs illustrating the plotting of real and imaginary values of the complex relative permittivity relative to frequency for portions of the turbinate tissue near blood vessels.

Below is a table (Table 2) providing the specific data points for each of the tissues with respect to the real and imaginary dielectric permittivity values or specific HN relaxation parameters obtained for specific tissue types when data obtained from 10 kHz to 80 kHz are trained.

TABLE 2

Tissue Type	Parameters	Value	Standard Error
End of Turbinate	α	0.082	0.009
	β	0.681	0.007
	f0	4539.116	193.596
	$\varepsilon 0$-$\varepsilon\infty$	9.858E6	170687.48
	$\varepsilon\infty$	1.54761E-10	--
Center of Turbinate	α	0	0.05358
	β	1	0.07788
	f0	3290.96	859.79
	$\varepsilon 0$-$\varepsilon\infty$	1.60E6	298682.17
	$\varepsilon\infty$	149101.39	11446.76
Near Blood Vessels	α	0.008	0.0118
	β	0.974	0.0174
	f0	3148.04	189.86
	$\varepsilon 0$-$\varepsilon\infty$	1.64E7	685597.97
	$\varepsilon\infty$	244034.20	26444.04
Upper Back Muscle	α	0	0.00467
	β	0.71561	0.0044
	f0	63.16	81.80
	$\varepsilon 0$-$\varepsilon\infty$	3.1E8	2.9E8
	$\varepsilon\infty$	241256.79	18021.68

Accordingly, the invention solves the problem of causing unnecessary collateral damage to non-targeted tissue during a procedure involving the application of electrotherapeutic

Aerin Exhibit 1011, Page 347 of 2183
Aerin Medical Inc. v. Neurent Medical Ltd.
IPR2025-01126

stimulation at a target site composed of a variety of tissue types. In particular, the systems and methods are able to, prior to treatment, characterize and identify tissue types and further identify specific levels of energy (i.e., specific target frequencies) to be delivered so as to cause only those intended, targeted tissues to exhibit dielectric relaxation phenomena and thus receive the energy for treatment, while non-targeted tissues remain intact and avoid collateral damage.

The following provides a detailed description of the various capabilities of systems and methods of the present invention, including, but not limited to, neuromodulation monitoring, feedback, and mapping capabilities, which, in turn, allowing for detection of anatomical structures and function, neural identification and mapping, and anatomical mapping, for example.

Neuromodulation Monitoring, Feedback, and Mapping Capabilities

As previously described, the system 100 includes a console 104 to which the device 102 is to be connected. The console 104 is configured to provide various functions for the device 102, which may include, but is not limited to, controlling, monitoring, supplying, and/or otherwise supporting operation of the device 102. The console 104 can further be configured to generate a selected form and/or magnitude of energy for delivery to tissue or nerves at the target site via the end effector (214, 314), and therefore the console 104 may have different configurations depending on the treatment modality of the device 102. For example, when device 102 is configured for electrode-based, heat-element-based, and/or transducer-based treatment, the console 104 includes an energy generator 106 configured to generate RF energy (e.g., monopolar, bipolar, or multi-polar RF energy), pulsed electrical energy, microwave energy, optical energy, ultrasound energy (e.g., intraluminally-delivered ultrasound and/or HIFU), direct heat energy, radiation (e.g., infrared, visible, and/or gamma radiation), and/or another suitable type of energy. When the device 102 is configured for cryotherapeutic treatment, the console 104 can include a refrigerant reservoir (not shown), and can be configured to supply the device 102 with refrigerant. Similarly, when the device 102 is configured for chemical-based treatment (e.g., drug infusion), the console 104 can include a chemical reservoir (not shown) and can be configured to supply the device 102 with one or more chemicals.

Aerin Exhibit 1011, Page 348 of 2183
Aerin Medical Inc. v. Neurent Medical Ltd.
IPR2025-01126

In some embodiments, the console 104 may include a controller 107 communicatively coupled to the device 102. However, in the embodiments described herein, the controller 107 may generally be carried by and provided within the handle 118 of the device 102. The controller 107 is configured to initiate, terminate, and/or adjust operation of one or more electrodes provided by the end effector (214, 314) directly and/or via the console 104. For example, the controller 107 can be configured to execute an automated control algorithm and/or to receive control instructions from an operator (e.g., surgeon or other medical professional or clinician). For example, the controller 107 and/or other components of the console 104 (e.g., processors, memory, etc.) can include a computer-readable medium carrying instructions, which when executed by the controller 107, causes the device 102 to perform certain functions (e.g., apply energy in a specific manner, detect impedance, detect temperature, detect nerve locations or anatomical structures, perform nerve mapping, etc.). A memory includes one or more of various hardware devices for volatile and non-volatile storage, and can include both read-only and writable memory. For example, a memory can comprise random access memory (RAM), CPU registers, read-only memory (ROM), and writable non-volatile memory, such as flash memory, hard drives, floppy disks, CDs, DVDs, magnetic storage devices, tape drives, device buffers, and so forth. A memory is not a propagating signal divorced from underlying hardware; a memory is thus non-transitory.

The console 104 may further be configured to provide feedback to an operator before, during, and/or after a treatment procedure via mapping/evaluation/feedback algorithms 110. For example, the mapping/evaluation/feedback algorithms 110 can be configured to provide information associated with the location of nerves at the treatment site, the location of other anatomical structures (e.g., vessels) at the treatment site, the temperature at the treatment site during monitoring and modulation, and/or the effect of the therapeutic neuromodulation on the nerves at the treatment site. In certain embodiments, the mapping/evaluation/feedback algorithm 110 can include features to confirm efficacy of the treatment and/or enhance the desired performance of the system 100. For example, the mapping/evaluation/feedback algorithm 110, in conjunction with the controller 107 and the end effector (214, 314), can be configured to monitor neural activity and/or temperature at the treatment site during therapy and automatically shut off the energy delivery when the neural activity and/or temperature reaches a predetermined threshold (e.g., a threshold reduction in neural activity, a threshold maximum temperature when

Aerin Exhibit 1011, Page 349 of 2183
Aerin Medical Inc. v. Neurent Medical Ltd.
IPR2025-01126

applying RF energy, or a threshold minimum temperature when applying cryotherapy). In other embodiments, the mapping/evaluation/feedback algorithm 110, in conjunction with the controller 107, can be configured to automatically terminate treatment after a predetermined maximum time, a predetermined maximum impedance or resistance rise of the targeted tissue (i.e., in comparison to a baseline impedance measurement), a predetermined maximum impedance of the targeted tissue), and/or other threshold values for biomarkers associated with autonomic function. This and other information associated with the operation of the system 100 can be communicated to the operator via a display 112 (e.g., a monitor, touchscreen, user interface, etc.) on the console 104 and/or a separate display (not shown) communicatively coupled to the console 104.

In various embodiments, the end effector (214, 314) and/or other portions of the system 100 can be configured to detect various bioelectric-parameters of the tissue at the target site, and this information can be used by the mapping/evaluation/feedback algorithms 110 to determine the anatomy at the target site (e.g., tissue types, tissue locations, vasculature, bone structures, foramen, sinuses, etc.), locate neural tissue, differentiate between different types of neural tissue, map the anatomical and/or neural structure at the target site, and/or identify neuromodulation patterns of the end effector (214, 314) with respect to the patient's anatomy. For example, the end effector (214, 314) can be used to detect resistance, complex electrical impedance, dielectric properties, temperature, and/or other properties that indicate the presence of neural fibers and/or other anatomical structures in the target region. In certain embodiments, the end effector (214, 314), together with the mapping/evaluation/feedback algorithms 110, can be used to determine resistance (rather than impedance) of the tissue (i.e., the load) to more accurately identify the characteristics of the tissue. The mapping/evaluation/feedback algorithms 110 can determine resistance of the tissue by detecting the actual power and current of the load (e.g., via the electrodes (244, 336)).

In some embodiments, the system 100 provides resistance measurements with a high degree of accuracy and a very high degree of precision, such as precision measurements to the hundredths of an Ohm (e.g., 0.01Ω) for the range of 1-2000Ω. The high degree of resistance detection accuracy provided by the system 100 allows for the detection sub-microscale structures and events, including the firing of neural tissue, differences between neural tissue and other anatomical structures (e.g., blood vessels), and event different types of neural tissue. This

Aerin Exhibit 1011, Page 350 of 2183
Aerin Medical Inc. v. Neurent Medical Ltd.
IPR2025-01126

information can be analyzed by the mapping/evaluation/feedback algorithms and/or the controller 107 and communicated to the operator via a high resolution spatial grid (e.g., on the display 112) and/or other type of display to identify neural tissue and other anatomy at the treatment site and/or indicate predicted neuromodulation regions based on the ablation pattern with respect to the mapped anatomy.

As previously described, in certain embodiments, each electrode (244, 336) can be operated independently of the other electrodes (244, 336). For example, each electrode can be individually activated and the polarity and amplitude of each electrode can be selected by an operator or a control algorithm executed by the controller 107. The selective independent control of the electrodes (244, 336) allows the end effector (214, 314) to detect information and deliver RF energy to highly customized regions. For example, a select portion of the electrodes (244, 336) can be activated to target specific neural fibers in a specific region while the other electrodes (244, 336) remain inactive. In certain embodiments, for example, electrodes (244, 336) may be activated across the portion of a strut that is adjacent to tissue at the target site, and the electrodes (244, 336) that are not proximate to the target tissue can remain inactive to avoid applying energy to non-target tissue. In addition, the electrodes (244, 336) can be individually activated to stimulate or therapeutically modulate certain regions in a specific pattern at different times (e.g., via multiplexing), which facilitates detection of anatomical parameters across a zone of interest and/or regulated therapeutic neuromodulation.

The electrodes (244, 336) can be electrically coupled to the energy generator 106 via wires (not shown) that extend from the electrodes (244, 336), through the shaft 116, and to the energy generator 106. When each of the electrodes (244, 336) is independently controlled, each electrode (244, 336) couples to a corresponding wire that extends through the shaft 116. This allows each electrode (244, 336) to be independently activated for stimulation or neuromodulation to provide precise ablation patterns and/or individually detected via the console 104 to provide information specific to each electrode (244, 336) for neural or anatomical detection and mapping. In other embodiments, multiple electrodes (244, 336) can be controlled together and, therefore, multiple electrodes (244, 336) can be electrically coupled to the same wire extending through the shaft 116. The energy generator 16 and/or components (e.g., a control module) operably coupled thereto can include custom algorithms to control the activation of the electrodes (244, 336). For example, the RF generator can deliver RF power at about 200-

Aerin Exhibit 1011, Page 351 of 2183
Aerin Medical Inc. v. Neurent Medical Ltd.
IPR2025-01126

100 W to the electrodes (244, 336), and do so while activating the electrodes (244, 336) in a predetermined pattern selected based on the position of the end effector (214, 314) relative to the treatment site and/or the identified locations of the target nerves. In other embodiments, the energy generator 106 delivers power at lower levels (e.g., less than 1 W, 1-5 W, 5-15 W, 15-50 W, 50-150 W, etc.) for stimulation and/or higher power levels. For example, the energy generator 106 can be configured to delivery stimulating energy pulses of 1-3 W via the electrodes (244, 336) to stimulate specific targets in the tissue.

As previously described, the end effector (214, 314) can further include one or more temperature sensors disposed on the struts and/or other portions of the end effector (214, 314) and electrically coupled to the console 104 via wires (not shown) that extend through the shaft 116. In various embodiments, the temperature sensors can be positioned proximate to the electrodes (244, 336) to detect the temperature at the interface between tissue at the target site and the electrodes (244, 336). In other embodiments, the temperature sensors can penetrate the tissue at the target site (e.g., a penetrating thermocouple) to detect the temperature at a depth within the tissue. The temperature measurements can provide the operator or the system with feedback regarding the effect of the therapeutic neuromodulation on the tissue. For example, in certain embodiments the operator may wish to prevent or reduce damage to the tissue at the treatment site, and therefore the temperature sensors can be used to determine if the tissue temperature reaches a predetermined threshold for irreversible tissue damage. Once the threshold is reached, the application of therapeutic neuromodulation energy can be terminated to allow the tissue to remain intact and avoid significant tissue sloughing during wound healing. In certain embodiments, the energy delivery can automatically terminate based on the mapping/evaluation/feedback algorithm 110 stored on the console 104 operably coupled to the temperature sensors.

In certain embodiments, the system 100 can determine the locations and/or morphology of neural tissue and/or other anatomical structures before therapy such that the therapeutic neuromodulation can be applied to precise regions including target neural tissue, while avoiding negative effects on non-target structures, such as blood vessels. As described in further detail below, the system 100 can detect various bioelectrical parameters in an interest zone to determine the location and morphology of various neural tissue (e.g., different types of neural tissue, neuronal directionality, etc.) and/or other tissue (e.g., glandular structures, vessels, bony

Aerin Exhibit 1011, Page 352 of 2183
Aerin Medical Inc. v. Neurent Medical Ltd.
IPR2025-01126

regions, etc.). In some embodiments, the system 100 is configured to measure bioelectric potential. To do so, one or more of the electrodes (244, 336) is placed in contact with an epithelial surface at a region of interest (e.g., a treatment site). Electrical stimuli (e.g., constant or pulsed currents at one or more frequencies) are applied to the tissue by one or more electrodes (244, 336) at or near the treatment site, and the voltage and/or current differences at various different frequencies between various pairs of electrodes (244, 336) of the end effector (214, 314) may be measured to produce a spectral profile or map of the detected bioelectric potential, which can be used to identify different types of tissues (e.g., vessels, neural tissue, and/or other types of tissue) in the region of interest. For example, current (i.e., direct or alternating current) can be applied to a pair of electrodes (244, 336) adjacent to each other and the resultant voltages and/or currents between other pairs of adjacent electrodes (244, 336) are measured. It will be appreciated that the current injection electrodes (244, 336) and measurement electrodes (244, 336) need not be adjacent, and that modifying the spacing between the two current injection electrodes (244, 336) can affect the depth of the recorded signals. For example, closely-spaced current injection electrodes (244, 336) provided recorded signals associated with tissue deeper from the surface of the tissue than further spaced apart current injection electrodes (244, 336) that provide recorded signals associated with tissue at shallower depths. Recordings from electrode pairs with different spacings may be merged to provide additional information on depth and localization of anatomical structures.

Further, complex impedance and/or resistance measurements of the tissue at the region of interest can be detected directly from current-voltage data provided by the bioelectric measurements while differing levels of frequency currents are applied to the tissue (e.g., via the end effector (214, 314)), and this information can be used to map the neural and anatomical structures by the use of frequency differentiation reconstruction. Applying the stimuli at different frequencies will target different stratified layers or cellular bodies or clusters. At high signal frequencies (e.g., electrical injection or stimulation), for example, cell membranes of the neural tissue do not impede current flow, and the current passes directly through the cell membranes. In this case, the resultant measurement (e.g., impedance, resistance, capacitance, and/or induction) is a function of the intracellular and extracellular tissue and liquids, ions, proteins and polysaccharides. At low signal frequencies, the membranes impede current flow to provide different defining characteristics of the tissues, such as the shapes and morphologies of

Aerin Exhibit 1011, Page 353 of 2183
Aerin Medical Inc. v. Neurent Medical Ltd.
IPR2025-01126

the cells or cell densities or cell spacing. The stimulation frequencies can be in the megahertz range, in the kilohertz range (e.g., 400-500 kHz, 450-480 kHz, etc.), and/or other frequencies attuned to the tissue being stimulated and the characteristics of the device being used. The detected complex impedance or resistances levels from the zone of interest can be displayed to the user (e.g., via the display 112) to visualize certain structures based on the stimulus frequency.

Further, the inherent morphology and composition of the anatomical structures in a given region or zone of the patient react differently to different frequencies and, therefore, specific frequencies can be selected to identify very specific structures. For example, the morphology or composition of targeted structures for anatomical mapping may depend on whether the cells of tissue or other structure are membranonic, stratified, and/or annular. In various embodiments, the applied stimulation signals can have predetermined frequencies attuned to specific neural tissue, such as the level of myelination and/or morphology of the myelination. For example, second axonal parasympathetic structures are poorly myelinated than sympathetic nerves or other structures and, therefore, will have a distinguishable response (e.g., complex impedance, resistance, etc.) with respect to a selected frequency than sympathetic nerves. Accordingly, applying signals with different frequencies to the target site can distinguish the targeted parasympathetic nerves from the non-targeted sensory nerves, and therefore provide highly specific target sites for neural mapping before or after therapy and/or neural evaluation post-therapy. In some embodiments, the neural and/or anatomical mapping includes measuring data at a region of interest with at least two different frequencies to identify certain anatomical structures such that the measurements are taken first based on a response to an injection signal having a first frequency and then again based on an injection signal having a second frequency different from the first. For example, there are two frequencies at which hypertrophied (i.e., disease-state characteristics) sub-mucosal targets have a different electrical conductivity or permittivity compared to "normal" (i.e., healthy) tissue. Complex conductivity may be determined based on one or more measured physiological parameters (e.g., complex impedance, resistance, dielectric measurements, dipole measurements, etc.) and/or observance of one or more confidently known attributes or signatures. Furthermore, the system 100 can also apply neuromodulation energy via the electrodes (244, 336) at one or more predetermined frequencies attuned to a target neural structure to provide highly targeted ablation of the selected neural structure associated with the frequency(ies). This highly targeted neuromodulation also reduces

Aerin Exhibit 1011, Page 354 of 2183
Aerin Medical Inc. v. Neurent Medical Ltd.
IPR2025-01126

the collateral effects of neuromodulation therapy to non-target sites/structures (e.g., blood vessels) because the targeted signal (having a frequency tuned to a target neural structure) will not have the same modulating effects on the non-target structures.

Accordingly, bioelectric properties, such as complex impedance and resistance, can be used by the system 100 before, during, and/or after neuromodulation therapy to guide one or more treatment parameters. For example, before, during, and/or after treatment, impedance or resistance measurements may be used to confirm and/or detect contact between one or more electrodes (244, 336) and the adjacent tissue. The impedance or resistance measurements can also be used to detect whether the electrodes (244, 336) are placed appropriately with respect to the targeted tissue type by determining whether the recorded spectra have a shape consistent with the expected tissue types and/or whether serially collected spectra were reproducible. In some embodiments, impedance or resistance measurements may be used to identify a boundary for the treatment zone (e.g., specific neural tissue that are to be disrupted), anatomical landmarks, anatomical structures to avoid (e.g., vascular structures or neural tissue that should not be disrupted), and other aspects of delivering energy to tissue.

The bioelectric information can be used to produce a spectral profile or map of the different anatomical features tissues at the target site, and the anatomical mapping can be visualized in a 3D or 2D image via the display 112 and/or other user interface to guide the selection of a suitable treatment site. This neural and anatomical mapping allows the system 100 to accurately detect and therapeutically modulate the postganglionic parasympathetic neural fibers that innervate the mucosa at numerous neural entrance points within a given zone or region of a patient. Further, because there are not any clear anatomical markers denoting the location of the SPF, accessory foramen, and microforamina, the neural mapping allows the operator to identify and therapeutically modulate nerves that would otherwise be unidentifiable without intricate dissection of the mucosa. In addition, anatomical mapping also allows the clinician to identify certain structures that the clinician may wish to avoid during therapeutic neural modulation (e.g., certain arteries). The neural and anatomical bioelectric properties detected by the system 100 can also be used during and after treatment to determine the real-time effect of the therapeutic neuromodulation on the treatment site. For example, the mapping/evaluation/feedback algorithms 110 can also compare the detected neural locations and/or activity before and after therapeutic neuromodulation, and compare the change in neural

Aerin Exhibit 1011, Page 355 of 2183
Aerin Medical Inc. v. Neurent Medical Ltd.
IPR2025-01126

activity to a predetermined threshold to assess whether the application of therapeutic neuromodulation was effective across the treatment site.

In various embodiments, the system 100 can also be configured to map the expected therapeutic modulation patterns of the electrodes (244, 336) at specific temperatures and, in certain embodiments, take into account tissue properties based on the anatomical mapping of the target site. For example, the system 100 can be configured to map the ablation pattern of a specific electrode ablation pattern at the 45° C. isotherm, the 55° C. isotherm, the 65° C. isotherm, and/or other temperature/ranges (e.g., temperatures ranging from 45° C. to 70° C. or higher) depending on the target site and/or structure.

The system 100 may provide, via the display 112, three-dimensional views of such projected ablation patterns of the electrodes (244, 336) of the end effector (214, 314). The ablation pattern mapping may define a region of influence that each electrode (244, 336) has on the surrounding tissue. The region of influence may correspond to the region of tissue that would be exposed to therapeutically modulating energy based on a defined electrode activation pattern (i.e., one, two, three, four, or more electrodes on any given strut). In other words, the ablation pattern mapping can be used to illustrate the ablation pattern of any number of electrodes (244, 336), any geometry of the electrode layout, and/or any ablation activation protocol (e.g., pulsed activation, multi-polar/sequential activation, etc.).

In some embodiments, the ablation pattern may be configured such that each electrode (244, 336) has a region of influence surrounding only the individual electrode (244, 336) (i.e., a "dot" pattern). In other embodiments, the ablation pattern may be such that two or more electrodes (244, 336) may link together to form a sub-grouped regions of influence that define peanut-like or linear shapes between two or more electrodes (244, 336). In further embodiments, the ablation pattern can result in a more expansive or contiguous pattern in which the region of influence extends along multiple electrodes (244, 336) (e.g., along each strut). In still further embodiments, the ablation pattern may result in different regions of influence depending upon the electrode activation pattern, phase angle, target temperature, pulse duration, device structure, and/or other treatment parameters. The three-dimensional views of the ablation patterns can be output to the display 112 and/or other user interfaces to allow the clinician to visualize the changing regions of influence based on different durations of energy application, different electrode activation sequences (e.g., multiplexing), different pulse sequences, different

Aerin Exhibit 1011, Page 356 of 2183
Aerin Medical Inc. v. Neurent Medical Ltd.
IPR2025-01126

temperature isotherms, and/or other treatment parameters. This information can be used to determine the appropriate ablation algorithm for a patient's specific anatomy. In other embodiments, the three-dimensional visualization of the regions of influence can be used to illustrate the regions from which the electrodes (244, 336) detect data when measuring bioelectrical properties for anatomical mapping. In this embodiment, the three dimensional visualization can be used to determine which electrode activation pattern should be used to determine the desired properties (e.g., impedance, resistance, etc.) in the desired area. In certain embodiments, it may be better to use dot assessments, whereas in other embodiments it may be more appropriate to detect information from linear or larger contiguous regions.

In some embodiments, the mapped ablation pattern is superimposed on the anatomical mapping to identify what structures (e.g., neural tissue, vessels, etc.) will be therapeutically modulated or otherwise affected by the therapy. An image may be provided to the surgeon which includes a digital illustration of a predicted or planned neuromodulation zone in relation to previously identified anatomical structures in a zone of interest. For example, the illustration may show numerous neural tissue and, based on the predicted neuromodulation zone, identifies which neural tissue are expected to be therapeutically modulated. The expected therapeutically modulated neural tissue may be shaded to differentiate them from the non-affected neural tissue. In other embodiments, the expected therapeutically modulated neural tissue can be differentiated from the non-affected neural tissue using different colors and/or other indicators. In further embodiments, the predicted neuromodulation zone and surrounding anatomy (based on anatomical mapping) can be shown in a three dimensional view (and/or include different visualization features (e.g., color-coding to identify certain anatomical structures, bioelectric properties of the target tissue, etc.). The combined predicted ablation pattern and anatomical mapping can be output to the display 112 and/or other user interfaces to allow the clinician to select the appropriate ablation algorithm for a patient's specific anatomy.

The imaging provided by the system 100 allows the clinician to visualize the ablation pattern before therapy and adjust the ablation pattern to target specific anatomical structures while avoiding others to prevent collateral effects. For example, the clinician can select a treatment pattern to avoid blood vessels, thereby reducing exposure of the vessel to the therapeutic neuromodulation energy. This reduces the risk of damaging or rupturing vessels and, therefore, prevents immediate or latent bleeding. Further, the selective energy application

Aerin Exhibit 1011, Page 357 of 2183
Aerin Medical Inc. v. Neurent Medical Ltd.
IPR2025-01126

provided by the neural mapping reduces collateral effects of the therapeutic neuromodulation, such as tissue sloughing off during wound healing (e.g., 1-3 weeks post ablation), thereby reducing the aspiration risk associated with the neuromodulation procedure.

The system 100 can be further configured to apply neuromodulation energy (via the electrodes (244, 336)) at specific frequencies attuned to the target neural structure and, therefore, specifically target desired neural tissue over non-target structures. For example, the specific neuromodulation frequencies can correspond to the frequencies identified as corresponding to the target structure during neural mapping. As described above, the inherent morphology and composition of the anatomical structures react differently to different frequencies. Thus, frequency-tuned neuromodulation energy tailored to a target structure does not have the same modulating effects on non-target structures. More specifically, applying the neuromodulation energy at the target-specific frequency causes ionic agitation in the target neural structure, leading to differentials in osmotic potentials of the targeted neural tissue and dynamic changes in neuronal membronic potentials (resulting from the difference in intra-cellular and extra-cellular fluidic pressure). This causes degeneration, possibly resulting in vacuolar degeneration and, eventually, necrosis at the target neural structure, but is not expected to functionally affect at least some non-target structures (e.g., blood vessels). Accordingly, the system 100 can use the neural-structure specific frequencies to both (1) identify the locations of target neural tissue to plan electrode ablation configurations (e.g., electrode geometry and/or activation pattern) that specifically focus the neuromodulation on the target neural structure; and (2) apply the neuromodulation energy at the characteristic neural frequencies to selectively ablate the neural tissue responsive to the characteristic neural frequencies. For example, the end effector (214, 314) of the system 100 may selectively stimulate and/or modulate parasympathetic fibers, sympathetic fibers, sensory fibers, alpha/beta/delta fibers, C-fibers, anoxic terminals of one or more of the foregoing, insulated over non-insulated fibers (regions with fibers), and/or other neural tissue. In some embodiments, the system 100 may also selectively target specific cells or cellular regions during anatomical mapping and/or therapeutic modulation, such as smooth muscle cells, sub-mucosal glands, goblet cells, and stratified cellular regions within a given tissue type. Therefore, the system 100 provides highly selective neuromodulation therapy specific to targeted neural tissue, and reduces the collateral effects of neuromodulation therapy to non-target structures (e.g., blood vessels).

Aerin Exhibit 1011, Page 358 of 2183
Aerin Medical Inc. v. Neurent Medical Ltd.
IPR2025-01126

The present disclosure provides a method of anatomical mapping and therapeutic neuromodulation. The method includes expanding an end effector (i.e., end effector (214, 314)) at a zone of interest ("interest zone"). For example, the end effector (214, 314) can be expanded such that at least some of the electrodes (244, 336) are placed in contact with tissue at the interest zone. The expanded device can then take bioelectric measurements via the electrodes (244, 336) and/or other sensors to ensure that the desired electrodes are in proper contact with the tissue at the interest zone. In some embodiments, for example, the system 100 detects the impedance and/or resistance across pairs of the electrodes (244, 336) to confirm that the desired electrodes have appropriate surface contact with the tissue and that all of the electrodes are (244, 336) functioning properly.

The method continues by optionally applying an electrical stimulus to the tissue, and detecting bioelectric properties of the tissue to establish baseline norms of the tissue. For example, the method can include measuring resistance, complex impedance, current, voltage, nerve firing rate, neuromagnetic field, muscular activation, and/or other parameters that are indicative of the location and/or function of neural tissue and/or other anatomical structures (e.g., glandular structures, blood vessels, etc.). In some embodiments, the electrodes (244, 336) send one or more stimulation signals (e.g., pulsed signals or constant signals) to the interest zone to stimulate neural activity and initiate action potentials. The stimulation signal can have a frequency attuned to a specific target structure (e.g., a specific neural structure, a glandular structure, a vessel) that allows for identification of the location of the specific target structure. The specific frequency of the stimulation signal is a function of the host permeability and, therefore, applying the unique frequency alters the tissue attenuation and the depth into the tissue the RF energy will penetrate. For example, lower frequencies typically penetrate deeper into the tissue than higher frequencies.

Pairs of the non-stimulating electrodes (244, 336) of the end effector (214, 314) can then detect one or more bioelectric properties of the tissue that occur in response to the stimulus, such as impedance or resistance. For example, an array of electrodes (e.g., the electrodes (244, 336)) can be selectively paired together in a desired pattern (e.g., multiplexing the electrodes (244, 336)) to detect the bioelectric properties at desired depths and/or across desired regions to provide a high level of spatial awareness at the interest zone. In certain embodiments, the electrodes (244, 336) can be paired together in a time-sequenced manner according to an

Aerin Exhibit 1011, Page 359 of 2183
Aerin Medical Inc. v. Neurent Medical Ltd.
IPR2025-01126

algorithm (e.g., provided by the mapping/evaluation/feedback algorithms 110). In various embodiments, stimuli can be injected into the tissue at two or more different frequencies, and the resultant bioelectric responses (e.g., action potentials) in response to each of the injected frequencies can be detected via various pairs of the electrodes (244, 336). For example, an anatomical or neural mapping algorithm can cause the end effector (214, 314) to deliver pulsed RF energy at specific frequencies between different pairs of the electrodes (244, 336) and the resultant bioelectric response can be recorded in a time sequenced rotation until the desired interest zone is adequately mapped (i.e., "multiplexing"). For example, the end effector (214, 314) can deliver stimulation energy at a first frequency via adjacent pairs of the electrodes (244, 336) for a predetermined time period (e.g., 1-50 milliseconds), and the resultant bioelectric activity (e.g., resistance) can be detected via one or more other pairs of electrodes (244, 336) (e.g., spaced apart from each other to reach varying depths within the tissue). The end effector (214, 314) can then apply stimulation energy at a second frequency different from the first frequency, and the resultant bioelectric activity can be detected via the other electrodes. This can continue when the interest zone has been adequately mapped at the desired frequencies. As described in further detail below, in some embodiments the baseline tissue bioelectric properties (e.g., nerve firing rate) are detected using static detection methods (without the injection of a stimulation signal).

After detecting the baseline bioelectric properties, the information can be used to map anatomical structures and/or functions at the interest zone. For example, the bioelectric properties detected by the electrodes (244, 336) can be amazed via the mapping/evaluation/feedback algorithms 110, and an anatomical map can be output to a user via the display 112. In some embodiments, complex impedance, dielectric, or resistance measurements can be used to map parasympathetic nerves and, optionally, identify neural tissue in a diseased state of hyperactivity. The bioelectric properties can also be used to map other non-target structures and the general anatomy, such as blood vessels, bone, and/or glandular structures. The anatomical locations can be provided to a user (e.g., on the display 112) as a two-dimensional map (e.g., illustrating relative intensities, illustrating specific sites of potential target structures) and/or as a three-dimensional image. This information can be used to differentiate structures on a submicron, cellular level and identify very specific target structures (e.g., hyperactive parasympathetic nerves). The method can also predict the ablation patterns of

Aerin Exhibit 1011, Page 360 of 2183
Aerin Medical Inc. v. Neurent Medical Ltd.
IPR2025-01126

the end effector (214, 314) based on different electrode neuromodulation protocol and, optionally, superimpose the predicted neuromodulation patterns onto the mapped anatomy to indicate to the user which anatomical structures will be affected by a specific neuromodulation protocol. For example, when the predicted neuromodulation pattern is displayed in relation to the mapped anatomy, a clinician can determine whether target structures will be appropriately ablated and whether non-target structures (e.g., blood vessels) will be undesirably exposed to the therapeutic neuromodulation energy. Thus, the method can be used for planning neuromodulation therapy to locate very specific target structures, avoid non-target structures, and select electrode neuromodulation protocols.

Once the target structure is located and a desired electrode neuromodulation protocol has been selected, the method continues by applying therapeutic neuromodulation to the target structure. The neuromodulation energy can be applied to the tissue in a highly targeted manner that forms micro-lesions to selectively modulate the target structure, while avoiding non-targeted blood vessels and allowing the surrounding tissue structure to remain healthy for effective wound healing. In some embodiments, the neuromodulation energy can be applied in a pulsed manner, allowing the tissue to cool between modulation pulses to ensure appropriate modulation without undesirably affecting non-target tissue. In some embodiments, the neuromodulation algorithm can deliver pulsed RF energy between different pairs of the electrodes (244, 336) in a time sequenced rotation until neuromodulation is predicted to be complete (i.e., "multiplexing"). For example, the end effector (214, 314) can deliver neuromodulation energy (e.g., having a power of 5-10 W (e.g., 7 W, 8 W, 9 W) and a current of about 50-100 mA) via adjacent pairs of the electrodes (244, 336) until at least one of the following conditions is met: (a) load resistance reaches a predefined maximum resistance (e.g., 350Ω); (b) a thermocouple temperature associated with the electrode pair reaches a predefined maximum temperature (e.g., 80° C.); or (c) a predetermined time period has elapsed (e.g., 10 seconds). After the predetermined conditions are met, the end effector (214, 314) can move to the next pair of electrodes in the sequence, and the neuromodulation algorithm can terminate when all of the load resistances of the individual pairs of electrodes is at or above a predetermined threshold (e.g., 100Ω). In various embodiments, the RF energy can be applied at a predetermined frequency (e.g., 450-500 kHz) and is expected to initiate ionic agitation of the specific target structure, while avoiding functional disruption of non-target structures.

Aerin Exhibit 1011, Page 361 of 2183
Aerin Medical Inc. v. Neurent Medical Ltd.
IPR2025-01126

During and/or after neuromodulation therapy, the method continues by detecting and, optionally, mapping the post-therapy bioelectric properties of the target site. This can be performed in a similar manner as described above. The post-therapy evaluation can indicate if the target structures (e.g., hyperactive parasympathetic nerves) were adequately modulated or ablated. If the target structures are not adequately modulated (i.e., if neural activity is still detected in the target structure and/or the neural activity has not decreased), the method can continue by again applying therapeutic neuromodulation to the target. If the target structures were adequately ablated, the neuromodulation procedure can be completed.

Detection of Anatomical Structures and Function

Various embodiments of the present technology can include features that measure bio-electric, dielectric, and/or other properties of tissue at target sites to determine the presence, location, and/or activity of neural tissue and other anatomical structures and, optionally, map the locations of the detected neural tissue and/or other anatomical structures. For example, the present technology can be used to detect glandular structures and, optionally, their mucoserous functions and/or other functions. The present technology can also be configured to detect vascular structures (e.g., arteries) and, optionally, their arterial functions, volumetric pressures, and/or other functions. The mapping features discussed below can be incorporated into any the system 100 and/or any other devices disclosed herein to provide an accurate depiction of nerves at the target site.

Neural and/or anatomical detection can occur (a) before the application of a therapeutic neuromodulation energy to determine the presence or location of neural tissue and other anatomical structures (e.g., blood vessels, glands, etc.) at the target site and/or record baseline levels of neural activity; (b) during therapeutic neuromodulation to determine the real-time effect of the energy application on the neural fibers at the treatment site; and/or (c) after therapeutic neuromodulation to confirm the efficacy of the treatment on the targeted structures (e.g., nerves glands, etc.). This allows for the identification of very specific anatomical structures (even to the micro-scale or cellular level) and, therefore, provides for highly targeted neuromodulation. This enhances the efficacy and efficiency of the neuromodulation therapy. In addition, the anatomical mapping reduces the collateral effects of neuromodulation therapy to non-target sites. Accordingly, the targeted neuromodulation inhibits damage or rupture of blood vessels (i.e.,

Aerin Exhibit 1011, Page 362 of 2183
Aerin Medical Inc. v. Neurent Medical Ltd.
IPR2025-01126

inhibits undesired bleeding) and collateral damage to tissue that may be of concern during wound healing (e.g., when damaged tissue sloughs off).

In certain embodiments, the systems disclosed herein can use bioelectric measurements, such as impedance, resistance, voltage, current density, and/or other parameters (e.g., temperature) to determine the anatomy, in particular the neural, glandular, and vascular anatomy, at the target site. The bioelectric properties can be detected after the transmission of a stimulus (e.g., an electrical stimulus, such as RF energy delivered via the electrodes (244, 336); i.e., "dynamic" detection) and/or without the transmission of a stimulus (i.e., "static" detection).

Dynamic measurements include various embodiments to excite and/or detect primary or secondary effects of neural activation and/or propagation. Such dynamic embodiments involve the heightened states of neural activation and propagation and use this dynamic measurement for nerve location and functional identification relative to the neighboring tissue types. For example, a method of dynamic detection can include: (1) delivering stimulation energy to a treatment site via a treatment device (e.g., the end effector) to excite parasympathetic nerves at the treatment site; (2) measuring one or more physiological parameters (e.g., resistance, impedance, etc.) at the treatment site via a measuring/sensing array of the treatment device (e.g., the electrodes (244, 336)); (4) based on the measurements, identifying the relative presence and position of parasympathetic nerves at the treatment site; and (5) delivering ablation energy to the identified parasympathetic nerves to block the detected para-sympathetic nerves.

Static measurements include various embodiments associated with specific native properties of the stratified or cellular composition at or near the treatment site. The static embodiments are directed to inherent biologic and electrical properties of tissue types at or near the treatment site, the stratified or cellular compositions at or near the treatment site, and contrasting both foregoing measurements with tissue types adjacent the treatment site (and that are not targeted for neuromodulation). This information can be used to localize specific targets (e.g., parasympathetic fibers) and non-targets (e.g., vessels, sensory nerves, etc.). For example, a method of static detection can include: (1) before ablation, utilizing a measuring/sensing array of a treatment device (e.g., the electrodes (244, 336)) to determine one or more baseline physiological parameters; (2) geometrically identifying inherent tissue properties within a region of interest based on the measured physiological parameters (e.g., resistance, impedance, etc.); (3) delivering ablation energy to one or more nerves within the region of via treatment device

Aerin Exhibit 1011, Page 363 of 2183
Aerin Medical Inc. v. Neurent Medical Ltd.
IPR2025-01126

interest; (4) during the delivery of the ablation energy, determining one or more mid-procedure physiological parameters via the measuring/sensing array; and (5) after the delivery of ablation energy, determining one or more post-procedure physiological parameters via the measurement/sensing array to determine the effectiveness of the delivery of the ablation energy on blocking the nerves that received the ablation energy.

After the initial static and/or dynamic detection of bioelectric properties, the location of anatomical features can be used to determine where the treatment site(s) should be with respect to various anatomical structures for therapeutically effective neuromodulation of the targeted nerves. The bioelectric and other physiological properties described herein can be detected via electrodes (e.g., the electrodes (244, 336) of the end effector (214, 314)), and the electrode pairings on a device (e.g., end effector (214, 314)) can be selected to obtain the bioelectric data at specific zones or regions and at specific depths of the targeted regions. The specific properties detected at or surrounding target neuromodulation sites and associated methods for obtaining these properties are described below. These specific detection and mapping methods discussed below are described with reference to the system 100 , although the methods can be implemented on other suitable systems and devices that provide for anatomical identification, anatomical mapping and/or neuromodulation therapy.

Neural Identification and Mapping

In many neuromodulation procedures, it is beneficial to identify the portions of the nerves that fall within a zone and/or region of influence (referred to as the "interest zone") of the energy delivered by a device 102, as well as the relative three-dimensional position of the neural tissue relative to the device 102. Characterizing the portions of the neural tissue within the interest zone and/or determining the relative positions of the neural tissue within the interest zone enables the clinician to (1) selectively activate target neural tissue over non-target structures (e.g., blood vessels), and (2) sub-select specific targeted neural tissue (e.g., parasympathetic nerves) over non-target neural tissue (e.g., sensory nerves, subgroups of neural tissue, neural tissue having certain compositions or morphologies). The target structures (e.g., parasympathetic nerves) and non-target structures (e.g., blood vessels, sensory nerves, etc.) can be identified based on the inherent signatures of specific structures, which are defined by the unique morphological compositions of the structures and the bioelectrical properties associated

Aerin Exhibit 1011, Page 364 of 2183
Aerin Medical Inc. v. Neurent Medical Ltd.
IPR2025-01126

with these morphological compositions. For example, unique, discrete frequencies can be associated with morphological compositions and, therefore, be used to identify certain structures. The target and non-target structures can also be identified based on relative bioelectrical activation of the structures to sub-select specific neural structures. Further, target and non-target structures can be identified by the differing detected responses of the structures to a tailored injected stimuli. For example, the systems described herein can detect the magnitude of response of structures and the difference in the responses of anatomical structures with respect to differing stimuli (e.g., stimuli injected at different frequencies).

At least for purposes of this disclosure, a nerve can include the following portions that are defined based on their respective orientations relative to the interest zone: terminating neural tissue (e.g., terminating axonal structures), branching neural tissue (e.g., branching axonal structures), and travelling neural tissue (e.g., travelling axonal structures). For example, terminating neural tissue enter the zone but do not exit. As such, terminating neural tissue are terminal points for neuronal signaling and activation. Branching neural tissue are nerves that enter the interest zone and increase number of nerves exiting the interest zone. Branching neural tissue are typically associated with a reduction in relative geometry of nerve bundle. Travelling neural tissue are nerves that enter the interest zone and exit the zone with no substantially no change in geometry or numerical value.

The system 100 can be used to detect voltage, current, complex impedance, resistance, permittivity, and/or conductivity, which are tied to the compound action potentials of nerves, to determine and/or map the relative positions and proportionalities of nerves in the interest zone. Neuronal cross-sectional area ("CSA") is expected to be due to the increase in axonic structures. Each axon is a standard size. Larger nerves (in cross-sectional dimension) have a larger number of axons than nerves having smaller cross-sectional dimensions. The compound action responses from the larger nerves, in both static and dynamic assessments, are greater than smaller nerves. This is at least in part because the compound action potential is the cumulative action response from each of the axons. When using static analysis, for example, the system 100 can directly measure and map impedance or resistance of nerves and, based on the determined impedance or resistance, determine the location of nerves and/or relative size of the nerves. In dynamic analysis, the system 100 can be used to apply a stimulus to the interest zone and detect the dynamic response of the neural tissue to the stimulus. Using this information, the system 100

Aerin Exhibit 1011, Page 365 of 2183
Aerin Medical Inc. v. Neurent Medical Ltd.
IPR2025-01126

can determine and/or map impedance or resistance in the interest zone to provide information related to the neural positions or relative nerve sizes. Neural impedance mapping can be illustrated by showing the varying complex impedance levels at a specific location at differing cross-sectional depths. In other embodiments, neural impedance or resistance can be mapped in a three-dimensional display.

Identifying the portions and/or relative positions of the nerves within the interest zone can inform and/or guide selection of one or more treatment parameters (e.g., electrode ablation patterns, electrode activation plans, etc.) of the system 100 for improving treatment efficiency and efficacy. For example, during neural monitoring and mapping, the system 100 can identify the directionality of the nerves based at least in part on the length of the neural structure extending along the interest zone, relative sizing of the neural tissue, and/or the direction of the action potentials. This information can then be used by the system 100 or the clinician to automatically or manually adjust treatment parameters (e.g., selective electrode activation, bipolar and/or multipolar activation, and/or electrode positioning) to target specific nerves or regions of nerves. For example, the system 100 can selectively activate specific electrodes (244, 336), electrode combinations (e.g., asymmetric or symmetric), and/or adjust the bi-polar or multi-polar electrode configuration. In some embodiments, the system 100 can adjust or select the waveform, phase angle, and/or other energy delivery parameters based on the nerve portion/position mapping and/or the nerve proportionality mapping. In some embodiments, structure and/or properties of the electrodes (244, 336) themselves (e.g., material, surface roughening, coatings, cross-sectional area, perimeter, penetrating, penetration depth, surface-mounted, etc.) may be selected based on the nerve portion and proportionality mapping.

In various embodiments, treatment parameters and/or energy delivery parameters can be adjusted to target on-axis or near axis travelling neural tissue and/or avoid the activation of traveling neural tissue that are at least generally perpendicular to the end effector (214, 314). Greater portions of the on-axis or near axis travelling neural tissue are exposed and susceptible to the neuromodulation energy provided by the end effector (214, 314) than a perpendicular travelling neural structure, which may only be exposed to therapeutic energy at a discrete cross-section. Therefore, the end effector (214, 314) is more likely to have a greater effect on the on-axis or near axis travelling neural tissue. The identification of the neural structure positions (e.g., via complex impedance or resistance mapping) can also allow targeted energy delivery to

Aerin Exhibit 1011, Page 366 of 2183
Aerin Medical Inc. v. Neurent Medical Ltd.
IPR2025-01126

travelling neural tissue rather than branching neural tissue (typically downstream of the travelling neural tissue) because the travelling neural tissue are closer to the nerve origin and, therefore, more of the nerve is affected by therapeutic neuromodulation, thereby resulting in a more efficient treatment and/or a higher efficacy of treatment. Similarly, the identification of neural structure positions can be used to target travelling and branching neural tissue over terminal neural tissue. In some embodiments, the treatment parameters can be adjusted based on the detected neural positions to provide a selective regional effect. For example, a clinician can target downstream portions of the neural tissue if only wanting to influence partial effects on very specific anatomical structures or positions.

In various embodiments, neural locations and/or relative positions of nerves can be determined by detecting the nerve-firing voltage and/or current over time. An array of the electrodes (244, 336) can be positioned in contact with tissue at the interest zone, and the electrodes (244, 336) can measure the voltage and/or current associated with nerve-firing. This information can optionally be mapped (e.g., on a display 112) to identify the location of nerves in a hyper state (i.e., excessive parasympathetic tone). Rhinitis is at least in part the result of over-firing nerves because this hyper state drives the hyper-mucosal production and hyper-mucosal secretion. Therefore, detection of nerve firing rate via voltage and current measurements can be used to locate the portions of the interest region that include hyper-parasympathetic neural function (i.e., nerves in the diseased state). This allows the clinician to locate specific nerves (i.e., nerves with excessive parasympathetic tone) before neuromodulation therapy, rather than simply targeting all parasympathetic nerves (including non-diseased state parasympathetic nerves) to ensure that the correct tissue is treated during neuromodulation therapy. Further, nerve firing rate can be detected during or after neuromodulation therapy so that the clinician can monitor changes in nerve firing rate to validate treatment efficacy. For example, recording decreases or elimination of nerve firing rate after neuromodulation therapy can indicate that the therapy was effective in therapeutically treating the hyper/diseased nerves.

In various embodiments, the system 100 can detect neural activity using dynamic activation by injecting a stimulus signal (i.e., a signal that temporarily activates nerves) via one or more of the electrodes (244, 336) to induce an action potential, and other pairs of electrodes (244, 336) can detect bioelectric properties of the neural response. Detecting neural tissue using dynamic activation involves detecting the locations of action potentials within the interest zone

Aerin Exhibit 1011, Page 367 of 2183
Aerin Medical Inc. v. Neurent Medical Ltd.
IPR2025-01126

by measuring the discharge rate in neurons and the associated processes. The ability to numerically measure, profile, map, and/or image fast neuronal depolarization for generating an accurate index of activity is a factor in measuring the rate of discharge in neurons and their processes. The action potential causes a rapid increase in the voltage across nerve fiber and the electrical impulse then spreads along the fiber. As an action potential occurs, the conductance of a neural cell membrane changes, becoming about 40 times larger than it is when the cell is at rest. During the action potential or neuronal depolarization, the membrane resistance diminishes by about 80 times, thereby allowing an applied current to enter the intracellular space as well. Over a population of neurons, this leads to a net decrease in the resistance during coherent neuronal activity, such as chronic para-sympathetic responses, as the intracellular space will provide additional conductive ions. The magnitude of such fast changes has been estimated to have local resistivity changes with recording near DC is 2.8-3.7% for peripheral nerve bundles.

Detecting neural tissue using dynamic activation includes detecting the locations of action potentials within the interest zone by measuring the discharge rate in neurons and the associated processes. The basis of each this discharge is the action potential, during which there is a depolarization of the neuronal membrane of up to 110 mV or more, lasting approximately 2 milliseconds, and due to the transfer of micromolar quantities of ions (e.g., sodium and potassium) across the cellular membrane. The complex impedance or resistance change due to the neuronal membrane falls from 1000 to 25 Ωcm. The introduction of a stimulus and subsequent measurement of the neural response can attenuate noise and improve signal to noise ratios to precisely focus on the response region to improve neural detection, measurement, and mapping.

In some embodiments, the difference in measurements of physiological parameters (e.g., complex impedance, resistance, voltage) over time, which can reduce errors, can be used to create a neural profiles, spectrums, or maps. For example, the sensitivity of the system 100 can be improved because this process provides repeated averaging to a stimulus. As a result, the mapping function outputs can be a unit-less ratio between the reference and test collated data at a single frequency and/or multiple frequencies and/or multiple amplitudes. Additional considerations may include multiple frequency evaluation methods that consequently expand the parameter assessments, such as resistivity, admittivity, center frequency, or ratio of extra- to intracellular resistivity.

Aerin Exhibit 1011, Page 368 of 2183
Aerin Medical Inc. v. Neurent Medical Ltd.
IPR2025-01126

In some embodiments, the system 100 may also be configured to indirectly measure the electrical activity of neural tissue to quantify the metabolic recovery processes that accompany action potential activity and act to restore ionic gradients to normal. These are related to an accumulation of ions in the extracellular space. The indirect measurement of electrical activity can be approximately a thousand times larger (in the order of millimolar), and thus are easier to measure and can enhance the accuracy of the measured electrical properties used to generate the neural maps.

The system 100 can perform dynamic neural detection by detecting nerve-firing voltage and/or current and, optionally, nerve firing rate over time, in response to an external stimulation of the nerves. For example, an array of the electrodes (244, 336) can be positioned in contact with tissue at the interest zone, one or more of the electrodes (244, 336) can be activated to inject a signal into the tissue that stimulates the nerves, and other electrodes (244, 336) of the electrode array can measure the neural voltage and/or current due to nerve firing in response to the stimulus. This information can optionally be mapped (e.g., on a display 112) to identify the location of nerves and, in certain embodiments, identify parasympathetic nerves in a hyper state (e.g., indicative of Rhinitis or other diseased state). The dynamic detection of neural activity (voltage, current, firing rate, etc.) can be performed before neuromodulation therapy to detect target nerve locations to select the target site and treatment parameters to ensure that the correct tissue is treated during neuromodulation therapy. Further, dynamic detection of neural activity can be performed during or after neuromodulation therapy to allow the clinician to monitor changes in neural activity to validate treatment efficacy. For example, recording decreases or elimination of neural activity after neuromodulation therapy can indicate that the therapy was effective in therapeutically treating the hyper/diseased nerves.

In some embodiments, a stimulating signal can be delivered to the vicinity of the targeted nerve via one or more penetrating electrodes (e.g., microneedles that penetrate tissue) associated with the end effector (214, 314) and/or a separate device. The stimulating signal generates an action potential, which causes smooth muscle cells or other cells to contract. The location and strength of this contraction can be detected via the penetrating electrode(s) and, thereby, indicate to the clinician the distance to the nerve and/or the location of the nerve relative to the stimulating needle electrode. In some embodiments, the stimulating electrical signal may have a voltage of typically 1-2 mA or greater and a pulse width of typically 100-200 microseconds or

Aerin Exhibit 1011, Page 369 of 2183
Aerin Medical Inc. v. Neurent Medical Ltd.
IPR2025-01126

greater. Shorter pulses of stimulation result in better discrimination of the detected contraction, but may require more current. The greater the distance between the electrode and the targeted nerve, the more energy is required to stimulate. The stimulation and detection of contraction strength and/or location enables identification of how close or far the electrodes are from the nerve, and therefore can be used to localize the nerve spatially. In some embodiments, varying pulse widths may be used to measure the distance to the nerve. As the needle becomes closer to the nerve, the pulse duration required to elicit a response becomes less and less.

To localize nerves via muscle contraction detection, the system 100 can vary pulse-width or amplitude to vary the energy (Energy=pulse-width*amplitude) of the stimulus delivered to the tissue via the penetrating electrode(s). By varying the stimulus energy and monitoring muscle contraction via the penetrating electrodes and/or other type of sensor, the system 100 can estimate the distance to the nerve. If a large amount of energy is required to stimulate the nerve/contract the muscle, the stimulating/penetrating electrode is far from the nerve. As the stimulating/penetrating electrode, moves closer to the nerve, the amount of energy required to induce muscle contraction will drop. For example, an array of penetrating electrodes can be positioned in the tissue at the interest zone and one or more of the electrodes can be activated to apply stimulus at different energy levels until they induce muscle contraction. Using an iterative process, localize the nerve (e.g., via the mapping/evaluation/feedback algorithm 110).

In some embodiments, the system 100 can measure the muscular activation from the nerve stimulus (e.g., via the electrodes (244, 336)) to determine neural positioning for neural mapping, without the use of penetrating electrodes. In this embodiment, the treatment device targets the smooth muscle cells' varicosities surrounding the submucosal glands and the vascular supply, and then the compound muscle action potential. This can be used to summate voltage response from the individual muscle fiber action potentials. The shortest latency is the time from stimulus artifact to onset of the response. The corresponding amplitude is measured from baseline to negative peak and measured in millivolts (mV). Nerve latencies (mean±SD) in adults typically range about 2-6 milliseconds, and more typically from about 3.4±0.8 to about 4.0±0.5 milliseconds.

In some embodiments, the system 100 can record a neuromagnetic field outside of the nerves to determine the internal current of the nerves without physical disruption of the nerve membrane. Without being bound by theory, the contribution to the magnetic field from the

Aerin Exhibit 1011, Page 370 of 2183
Aerin Medical Inc. v. Neurent Medical Ltd.
IPR2025-01126

current inside the membrane is two orders of magnitude larger than that from the external current, and that the contribution from current within the membrane is substantially negligible. Electrical stimulation of the nerve in tandem with measurements of the magnetic compound action fields ("CAFs") can yield sequential positions of the current dipoles such that the location of the conduction change can be estimated (e.g., via the least-squares method). Visual representation (e.g., via the display 112) using magnetic contour maps can show normal or non-normal neural characteristics (e.g., normal can be equated with a characteristic quadrupolar pattern propagating along the nerve), and therefore indicate which nerves are in a diseases, hyperactive state and suitable targets for neuromodulation.

During magnetic field detection, an array of the electrodes (244, 336) can be positioned in contact with tissue at the interest zone and, optionally, one or more of the electrodes (244, 336) can be activated to inject an electrical stimulus into the tissue. As the nerves in the interest zone fire (either in response to a stimulus or in the absence of it), the nerve generates a magnetic field (e.g., similar to a current carrying wire), and therefore changing magnetic fields are indicative of the nerve nerve-firing rate. The changing magnetic field caused by neural firing can induce a current detected by nearby sensor wire (e.g., the sensor 314) and/or wires associated with the nearby electrodes (244, 336). By measuring this current, the magnetic field strength can be determined. The magnetic fields can optionally be mapped (e.g., on a display 112) to identify the location of nerves and select target nerves (nerves with excessive parasympathetic tone) before neuromodulation therapy to ensure that the desired nerves are treated during neuromodulation therapy. Further, the magnetic field information can be used during or after neuromodulation therapy so that the clinician can monitor changes in nerve firing rate to validate treatment efficacy.

In other embodiments, the neuromagnetic field is measured with a Hall Probe or other suitable device, which can be integrated into the end effector (214, 314) and/or part of a separate device delivered to the interest zone. Alternatively, rather than measuring the voltage in the second wire, the changing magnetic field can be measured in the original wire (i.e. the nerve) using a Hall probe. A current going through the Hall probe will be deflected in the semi-conductor. This will cause a voltage difference between the top and bottom portions, which can be measured. In some aspects of this embodiments, three orthogonal planes are utilized.

Aerin Exhibit 1011, Page 371 of 2183
Aerin Medical Inc. v. Neurent Medical Ltd.
IPR2025-01126

In some embodiments, the system 100 can be used to induce electromotive force ("EMF") in a wire (i.e., a frequency-selective circuit, such as a tunable/LC circuit) that is tunable to resonant frequency of a nerve. In this embodiment, the nerve can be considered to be a current carrying wire, and the firing action potential is a changing voltage. This causes a changing current which, in turn, causes a changing magnetic flux (i.e., the magnetic field that is perpendicular to the wire). Under Faraday's Law of Induction/Faraday's Principle, the changing magnetic flux induces EMF (including a changing voltage) in a nearby sensor wire (e.g., integrated into the end effector (214, 314), the sensor 314, and/or other structure), and the changing voltage can be measured via the system 100.

In further embodiments, the sensor wire (e.g., the sensor 314) is an inductor and, therefore, provides an increase of the magnetic linkage between the nerve (i.e., first wire) and the sensor wire (i.e., second wire), with more turns for increasing effect. (e.g., V2,rms=V1,rms (N2/N1)). Due to the changing magnetic field, a voltage is induced in the sensor wire, and this voltage can be measured and used to estimate current changes in the nerve. Certain materials can be selected to enhance the efficiency of the EMF detection. For example, the sensor wire can include a soft iron core or other high permeability material for the inductor.

During induced EMF detection, the end effector (214, 314) and/or other device including a sensor wire is positioned in contact with tissue at the interest zone and, optionally, one or more of the electrodes (244, 336) can be activated to inject an electrical stimulus into the tissue. As the nerves in the interest zone fire (either in response to a stimulus or in the absence of it), the nerve generates a magnetic field (e.g., similar to a current carrying wire) that induces a current in the sensor wire (e.g., the sensor 314). This information can be used to determine neural location and/or map the nerves (e.g., on a display 112) to identify the location of nerves and select target nerves (nerves with excessive parasympathetic tone) before neuromodulation therapy to ensure that the desired nerves are treated during neuromodulation therapy. EMF information can also be used during or after neuromodulation therapy so that the clinician can monitor changes in nerve firing rate to validate treatment efficacy.

In some embodiments, the system 100 can detect magnetic fields and/or EMF generated at a selected frequency that corresponds to a particular type of nerve. The frequency and, by extension, the associated nerve type of the detected signal can be selected based on an external resonant circuit. Resonance occurs on the external circuit when it is matched to the frequency of

Aerin Exhibit 1011, Page 372 of 2183
Aerin Medical Inc. v. Neurent Medical Ltd.
IPR2025-01126

the magnetic field of the particular nerve type and that nerve is firing. In manner, the system 100 can be used to locate a particular sub-group/type of nerves.

In some embodiments, the system 100 can include a variable capacitor frequency-selective circuit to identify the location and/or map specific nerves (e.g., parasympathetic nerve, sensory nerve, nerve fiber type, nerve subgroup, etc.). The variable capacitor frequency-selective circuit can be defined by the sensor 314 and/or other feature of the end effector (214, 314). Nerves have different resonant frequencies based on their function and structure. Accordingly, the system 100 can include a tunable LC circuit with a variable capacitor (C) and/or variable inductor (L) that can be selectively tuned to the resonant frequency of desired nerve types. This allows for the detection of neural activity only associated with the selected nerve type and its associated resonant frequency. Tuning can be achieved by moving the core in and out of the inductor. For example, tunable LC circuits can tune the inductor by: (i) changing the number of coils around the core; (ii) changing the cross-sectional area of the coils around the core; (iii) changing the length of the coil; and/or (iv) changing the permeability of the core material (e.g., changing from air to a core material). Systems including such a tunable LC circuit provide a high degree of dissemination and differentiation not only as to the activation of a nerve signal, but also with respect to the nerve type that is activated and the frequency at which the nerve is firing.

Anatomical Mapping

In various embodiments, the system 100 is further configured to provide minimally-invasive anatomical mapping that uses focused energy current/voltage stimuli from a spatially localized source (e.g., the electrodes (244, 336)) to cause a change in the conductivity of the of the tissue at the interest zone and detect resultant biopotential and/or bioelectrical measurements (e.g., via the electrodes (244, 336)). The current density in the tissue changes in response to changes of voltage applied by the electrodes (244, 336), which creates a change in the electric current that can be measured with the end effector (214, 314) and/or other portions of the system 100. The results of the bioelectrical and/or biopotential measurements can be used to predict or estimate relative absorption profilometry to predict or estimate the tissue structures in the interest zone. More specifically, each cellular construct has unique conductivity and absorption profiles that can be indicative of a type of tissue or structure, such as bone, soft tissue, vessels, nerves,

Aerin Exhibit 1011, Page 373 of 2183
Aerin Medical Inc. v. Neurent Medical Ltd.
IPR2025-01126

types of nerves, and/or certain neural tissue. For example, different frequencies decay differently through different types of tissue. Accordingly, by detecting the absorption current in a region, the system 100 can determine the underlying structure and, in some instances, to a sub-microscale, cellular level that allows for highly specialized target localization and mapping. This highly specific target identification and mapping enhances the efficacy and efficiency of neuromodulation therapy, while also enhancing the safety profile of the system 100 to reduce collateral effects on non-target structures.

To detect electrical and dielectric tissue properties (e.g., resistance, complex impedance, conductivity, and/or, permittivity as a function of frequency), the electrodes (244, 336) and/or another electrode array is placed on tissue at an interest region, and an internal or external source (e.g., the generator 106) applies stimuli (current/voltage) to the tissue. The electrical properties of the tissue between the source and the receiver electrodes (244, 336) are measured, as well as the current and/or voltage at the individual receiver electrodes (244, 336). These individual measurements can then be converted into an electrical map/image/profile of the tissue and visualized for the user on the display 112 to identify anatomical features of interest and, in certain embodiments, the location of firing nerves. For example, the anatomical mapping can be provided as a color-coded or gray-scale three-dimensional or two-dimensional map showing differing intensities of certain bioelectric properties (e.g., resistance, impedance, etc.), or the information can be processed to map the actual anatomical structures for the clinician. This information can also be used during neuromodulation therapy to monitor treatment progression with respect to the anatomy, and after neuromodulation therapy to validate successful treatment. In addition, the anatomical mapping provided by the bioelectrical and/or biopotential measurements can be used to track the changes to non-target tissue (e.g., vessels) due to neuromodulation therapy to avoid negative collateral effects. For example, a clinician can identify when the therapy begins to ligate a vessel and/or damage tissue, and modify the therapy to avoid bleeding, detrimental tissue ablation, and/or other negative collateral effects.

Furthermore, the threshold frequency of electric current used to identify specific targets can subsequently be used when applying therapeutic neuromodulation energy. For example, the neuromodulation energy can be applied at the specific threshold frequencies of electric current that are target neuronal-specific and differentiated from other non-targets (e.g., blood vessels, non-target nerves, etc.). Applying ablation energy at the target-specific frequency results in an

Aerin Exhibit 1011, Page 374 of 2183
Aerin Medical Inc. v. Neurent Medical Ltd.
IPR2025-01126

electric field that creates ionic agitation in the target neural structure, which leads to differentials in osmotic potentials of the targeted neural tissue. These osmotic potential differentials cause dynamic changes in neuronal membronic potentials (resulting from the difference in intra-cellular and extra-cellular fluidic pressure) that lead to vacuolar degeneration of the targeted neural tissue and, eventually, necrosis. Using the highly targeted threshold neuromodulation energy to initiate the degeneration allows the system 100 to deliver therapeutic neuromodulation to the specific target, while surrounding blood vessels and other non-target structures are functionally maintained.

In some embodiments, the system 100 can further be configured to detect bioelectrical properties of tissue by non-invasively recording resistance changes during neuronal depolarization to map neural activity with electrical impedance, resistance, bio-impedance, conductivity, permittivity, and/or other bioelectrical measurements. Without being bound by theory, when a nerve depolarizes, the cell membrane resistance decreases (e.g., by approximately 80×) so that current will pass through open ion channels and into the intracellular space. Otherwise the current remains in the extracellular space. For non-invasive resistance measurements, tissue can be stimulated by applying a current of less than 100 Hz, such as applying a constant current square wave at 1 Hz with an amplitude less than 25% (e.g., 10%) of the threshold for stimulating neuronal activity, and thereby preventing or reducing the likelihood that the current does not cross into the intracellular space or stimulating at 2 Hz. In either case, the resistance and/or complex impedance is recorded by recording the voltage changes. A complex impedance or resistance map or profile of the area can then be generated.

For impedance/conductivity/permittivity detection, the electrodes (244, 336) and/or another electrode array are placed on tissue at an interest region, and an internal or external source (e.g., the generator 106) applies stimuli to the tissue, and the current and/or voltage at the individual receiver electrodes (244, 336) is measured. The stimuli can be applied at different frequencies to isolate different types of nerves. These individual measurements can then be converted into an electrical map/image/profile of the tissue and visualized for the user on the display 112 to identify anatomical features of interest. The neural mapping can also be used during neuromodulation therapy to select specific nerves for therapy, monitor treatment progression with respect to the nerves and other anatomy, and validate successful treatment.

Aerin Exhibit 1011, Page 375 of 2183
Aerin Medical Inc. v. Neurent Medical Ltd.
IPR2025-01126

In some embodiments of the neural and/or anatomical detection methods described above, the procedure can include comparing the mid-procedure physiological parameter(s) to the baseline physiological parameter(s) and/or other, previously-acquired mid-procedure physiological parameter(s) (within the same energy delivery phase). Such a comparison can be used to analyze state changes in the treated tissue. The mid-procedure physiological parameter(s) may also be compared to one or more predetermined thresholds, for example, to indicate when to stop delivering treatment energy. In some embodiments of the present technology, the measured baseline, mid-, and post-procedure parameters include a complex impedance. In some embodiments of the present technology, the post-procedure physiological parameters are measured after a pre-determined time period to allow the dissipation of the electric field effects (ionic agitation and/or thermal thresholds), thus facilitating accurate assessment of the treatment.

In some embodiments, the anatomical mapping methods described above can be used to differentiate the depth of soft tissues within the nasal mucosa. The depth of mucosa on the turbinates is relatively deep while the depth off the turbinate is relatively shallow and, therefore, identifying the tissue depth in the present technology also identifies positions within the nasal mucosa and where precisely to target. Further, by providing the micro-scale spatial impedance mapping of epithelial tissues as described above, the inherent unique signatures of stratified layers or cellular bodies can be used as identifying the region of interest. For example, different regions have larger or small populations of specific structures, such as submucosal glands, so target regions can be identified via the identification of these structures.

In some embodiments, the system 100 includes additional features that can be used to detect anatomical structures and map anatomical features. For example, the system 100 can include an ultrasound probe for identification of neural tissue and/or other anatomical structures. Higher frequency ultrasound provides higher resolution, but less depth of penetration. Accordingly, the frequency can be varied to achieve the appropriate depth and resolution for neural/anatomical localization. Functional identification may rely on the spatial pulse length ("SPL") (wavelength multiplied by number of cycles in a pulse). Axial resolution (SPL/2) may also be determined to locate nerves.

In some embodiments, the system 100 can further be configured to emit stimuli with selective parameters that suppress rather than fully stimulate neural activity. For example, in

Aerin Exhibit 1011, Page 376 of 2183
Aerin Medical Inc. v. Neurent Medical Ltd.
IPR2025-01126

embodiments where the strength-duration relationship for extracellular neural stimulation is selected and controlled, a state exists where the extracellular current can hyperpolarize cells, resulting in suppression rather than stimulation spiking behavior (i.e., a full action potential is not achieved). Both models of ion channels, Hodgkin–Huxley (HH) and Retinol Ganglion Cell (RGC), suggest that it is possible to hyperpolarize cells with appropriately designed burst extracellular stimuli, rather than extending the stimuli. This phenomenon could be used to suppress, rather than stimulate, neural activity during any of the embodiments of neural detection and/or modulation described herein.

As generally understood , the Hodgkin–Huxley (HH) model, or conductance-based model, is a mathematical model that describes how action potentials in neurons are initiated and propagated. It is a set of nonlinear differential equations that approximates the electrical characteristics of excitable cells such as neurons and cardiac myocytes and is a continuous-time dynamical system. A Hodgkin–Huxley type model represents the biophysical characteristic of cell membranes, as illustrated in the schematic diagram below:

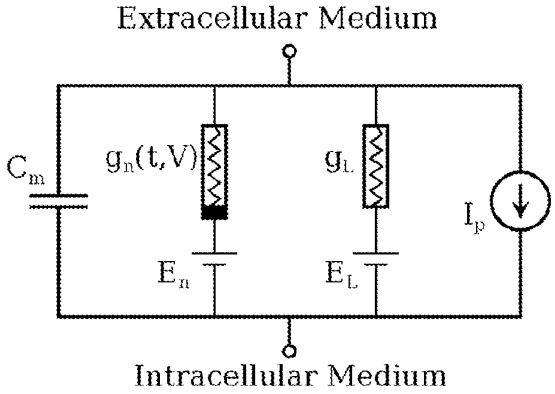

The lipid bilayer is represented as a capacitance (C_m). Voltage-gated and leak ion channels are represented by nonlinear (g_n) and linear (g_L) conductances, respectively. The electrochemical gradients driving the flow of ions are represented by batteries (E), and ion pumps and exchangers are represented by current sources (I_p).

A retinal ganglion cell (RGC) is a type of neuron located near the inner surface (the ganglion cell layer) of the retina of the eye. It receives visual information from photoreceptors via two intermediate neuron types: bipolar cells and retina amacrine cells. Retina amacrine cells, particularly narrow field cells, are important for creating functional subunits within the ganglion

Aerin Exhibit 1011, Page 377 of 2183
Aerin Medical Inc. v. Neurent Medical Ltd.
IPR2025-01126

cell layer and making it so that ganglion cells can observe a small dot moving a small distance. Retinal ganglion cells collectively transmit image-forming and non-image forming visual information from the retina in the form of action potential to several regions in the thalamus, hypothalamus, and mesencephalon, or midbrain. The six types of retinal neurons are bipolar cells, ganglion cells, horizontal cells, retina amacrine cells, and rod and cone photoreceptors.

In various embodiments, the system 100 could apply the anatomical mapping techniques disclosed herein to locate or detect the targeted vasculature and surrounding anatomy before, during, and/or after treatment.

Incorporation by Reference

References and citations to other documents, such as patents, patent applications, patent publications, journals, books, papers, web contents, have been made throughout this disclosure. All such documents are hereby incorporated herein by reference in their entirety for all purposes.

Equivalents

Various modifications of the invention and many further embodiments thereof, in addition to those shown and described herein, will become apparent to those skilled in the art from the full contents of this document, including references to the scientific and patent literature cited herein. The subject matter herein contains important information, exemplification and guidance that can be adapted to the practice of this invention in its various embodiments and equivalents thereof.

Reference throughout this specification to "one embodiment" or "an embodiment" means that a particular feature, structure, or characteristic described in connection with the embodiment is included in at least one embodiment. Thus, appearances of the phrases "in one embodiment" or "in an embodiment" in various places throughout this specification are not necessarily all referring to the same embodiment. Furthermore, the particular features, structures, or characteristics may be combined in any suitable manner in one or more embodiments.

The terms and expressions which have been employed herein are used as terms of description and not of limitation, and there is no intention, in the use of such terms and expressions, of excluding any equivalents of the features shown and described (or portions

Aerin Exhibit 1011, Page 378 of 2183
Aerin Medical Inc. v. Neurent Medical Ltd.
IPR2025-01126

thereof), and it is recognized that various modifications are possible within the scope of the claims. Accordingly, the claims are intended to cover all such equivalents.

Aerin Exhibit 1011, Page 379 of 2183
Aerin Medical Inc. v. Neurent Medical Ltd.
IPR2025-01126

Claims

What is claimed is:

1. A method for treating a condition, the method comprising:

providing a device comprising an end effector including a plurality of electrodes and a controller operably associated with the device;

positioning the end effector at a target site associated with a patient;

receiving, via the controller, data from the device associated with bioelectric properties of one or more tissues at the target site;

processing, via the controller, the data to identify a type of each of the one or more tissues at the target site and further identify a dielectric relaxation pattern for each of the one or more identified tissue types; and

determining, via the controller, an ablation pattern to be delivered by one or more of the plurality of electrodes of the end effector based on identified dielectric relaxation patterns, wherein ablation energy associated with the ablation pattern is at a level sufficient to ablate a targeted tissue and minimize and/or prevent collateral damage to surrounding or adjacent non-targeted tissue at the target site.

2. The method of claim 1, wherein a subset of the plurality of electrodes is configured to deliver non-therapeutic stimulating energy at a frequency/waveform to respective positions at the target site to thereby sense the bioelectric properties of the one or more tissues at the target site.

3. The method of claim 1, wherein the bioelectric properties comprise at least one of complex impedance, resistance, reactance, capacitance, inductance, permittivity, conductivity, dielectric properties, muscle or nerve firing voltage, muscle or nerve firing current, depolarization, hyperpolarization, magnetic field, and induced electromotive force.

4. The method of claim 3, wherein the dielectric properties comprise at least a complex, real and imaginary relative dielectric permittivity.

Aerin Exhibit 1011, Page 380 of 2183
Aerin Medical Inc. v. Neurent Medical Ltd.
IPR2025-01126

5. The method of claim 1, wherein the processing of the data, via the controller, comprises comparing the data received from the device with electric signature data associated with a plurality of known tissue types.

6. The method of claim 5, wherein the electric signature data comprises at least bioelectric properties and dielectric relaxation patterns of known tissue types.

7. The method of claim 6, wherein the dielectric relaxation patterns comprise at least one of a Maxwell-Wagner-Sillar (MWS) relaxation pattern, ionic relation pattern, and dielectric relaxation pattern.

8. The method of claim 5, wherein the comparison comprises correlating the data received from the device with electric signature data from a supervised and/or an unsupervised trained neural network.

9. The method of claim 1, wherein the ablation energy is tuned to a target frequency associated with relaxation patterns of the targeted tissue.

10. The method of claim 9, wherein the target frequency comprises a frequency at which the targeted tissue exhibits relaxation phenomena behavior and the non-targeted tissue does not exhibit relaxation phenomena behavior.

11. The method of claim 10, wherein delivery of the ablation energy, tuned to the target frequency, penetrates a membrane of one or more cells associated only with the targeted tissue.

12. The method of claim 1, wherein condition comprises a peripheral neurological condition.

13. The method of claim 12, wherein the peripheral neurological condition is associated with a nasal condition or a non-nasal condition of the patient.

14. The method of claim 13, wherein the non-nasal condition comprises atrial fibrillation (AF).

Aerin Exhibit 1011, Page 381 of 2183
Aerin Medical Inc. v. Neurent Medical Ltd.
IPR2025-01126

15. The method of claim 13, wherein the nasal condition comprises rhinosinusitis.

16. The method of claim 15, wherein the target site is within a sino-nasal cavity of the patient.

17. The method of claim 16, wherein delivery of the ablation energy results in disruption of multiple neural signals to, and/or result in local hypoxia of, mucus producing and/or mucosal engorgement elements within the sino-nasal cavity of the patient.

18. The method of claim 17, wherein the targeted tissue is proximate or inferior to a sphenopalatine foramen.

19. The method of claim 18, wherein delivery of the ablation energy results in therapeutic modulation of postganglionic parasympathetic nerves innervating nasal mucosa at foramina and or microforamina of a palatine bone of the patient.

20. The method of claim 19, wherein delivery of the ablation energy causes multiple points of interruption of neural branches extending through foramina and microforamina of palatine bone.

21. The method of claim 17, wherein delivery of the ablation energy causes thrombus formation within one or more blood vessels associated with mucus producing and/or mucosal engorgement elements within the nose.

22. The method of claim 21, wherein the resulting local hypoxia of the mucus producing and/or mucosal engorgement elements results in decreased mucosal engorgement to thereby increase volumetric flow through a nasal passage of the patient.

23. A system for treating a condition, the system comprising:

a device comprising an end effector including a plurality of electrodes; and

a controller operably associated with the device and configured to:

Aerin Exhibit 1011, Page 382 of 2183
Aerin Medical Inc. v. Neurent Medical Ltd.
IPR2025-01126

receive data from the device associated with bioelectric properties of one or more tissues at the target site;

process the data to identify a type of each of the one or more tissues at the target site and further identify a relaxation pattern(s) for each of the one or more identified tissue types; and

determine an ablation pattern to be delivered by one or more of the plurality of electrodes of the end effector based on identified relaxation patterns, wherein ablation energy associated with the ablation pattern is at a level sufficient to ablate a targeted tissue and minimize and/or prevent collateral damage to surrounding or adjacent non-targeted tissue at the target site.

24. The system of claim 23, wherein a subset of the plurality of electrodes is configured to deliver non-therapeutic stimulating energy at a frequency/waveform to respective positions at the target site to thereby sense the bioelectric properties of the one or more tissues at the target site.

25. The system of claim 23, wherein the bioelectric properties comprise at least one of complex impedance, resistance, reactance, capacitance, inductance, permittivity, conductivity, dielectric properties, muscle or nerve firing voltage, muscle or nerve firing current, depolarization, hyperpolarization, magnetic field, and induced electromotive force.

26. The system of claim 25, wherein the dielectric properties comprise at least a complex relative dielectric permittivity.

27. The system of claim 23, wherein the processing of the data comprises comparing the data received from the device with electric signature data associated with a plurality of known tissue types.

28. The system of claim 27, wherein the electric signature data comprises at least bioelectric properties and relaxation patterns of known tissue types.

Aerin Exhibit 1011, Page 383 of 2183
Aerin Medical Inc. v. Neurent Medical Ltd.
IPR2025-01126

29. The method of claim 28, wherein the dielectric relaxation patterns comprise at least one of a Maxwell-Wagner-Sillar (MWS) relaxation pattern, ionic relation pattern, and dielectric relaxation pattern.

30. The method of claim 27, wherein the comparison comprises correlating the data received from the device with electric signature data from a supervised and/or an unsupervised trained neural network.

31. The system of claim 23, wherein the ablation energy is tuned to a target frequency associated with a dielectric relaxation pattern of the targeted tissue.

32. The system of claim 31, wherein the target frequency comprises a frequency at which the targeted tissue exhibits relaxation phenomena behavior and the non-targeted tissue does not exhibit relaxation phenomena behavior.

33. The system of claim 32, wherein delivery of the ablation energy, tuned to the target frequency, penetrates a membrane of one or more cells associated only with the targeted tissue.

34. The system of claim 23, wherein condition comprises a peripheral neurological condition.

35. The system of claim 34, wherein the peripheral neurological condition is associated with a nasal condition or a non-nasal condition of the patient.

36. The system of claim 35, wherein the non-nasal condition comprises atrial fibrillation (AF).

37. The system of claim 35, wherein the nasal condition comprises rhinosinusitis.

38. The system of claim 37, wherein the target site is within a sino-nasal cavity of the patient.

Aerin Exhibit 1011, Page 384 of 2183
Aerin Medical Inc. v. Neurent Medical Ltd.
IPR2025-01126

39. The system of claim 38, wherein delivery of the ablation energy results in disruption of multiple neural signals to, and/or result in local hypoxia of, mucus producing and/or mucosal engorgement elements within the sino-nasal cavity of the patient.

40. The system of claim 39, wherein the targeted tissue is proximate or inferior to a sphenopalatine foramen.

41. The system of claim 40, wherein delivery of the ablation energy results in therapeutic modulation of postganglionic parasympathetic nerves innervating nasal mucosa at foramina and or microforamina of a palatine bone of the patient.

42. The system of claim 41, wherein delivery of the ablation energy causes multiple points of interruption of neural branches extending through foramina and microforamina of palatine bone.

43. The system of claim 39, wherein delivery of the ablation energy causes thrombus formation within one or more blood vessels associated with mucus producing and/or mucosal engorgement elements within the nose.

44. The system of claim 43, wherein the resulting local hypoxia of the mucus producing and/or mucosal engorgement elements results in decreased mucosal engorgement to thereby increase volumetric flow through a nasal passage of the patient.

Aerin Exhibit 1011, Page 385 of 2183
Aerin Medical Inc. v. Neurent Medical Ltd.
IPR2025-01126

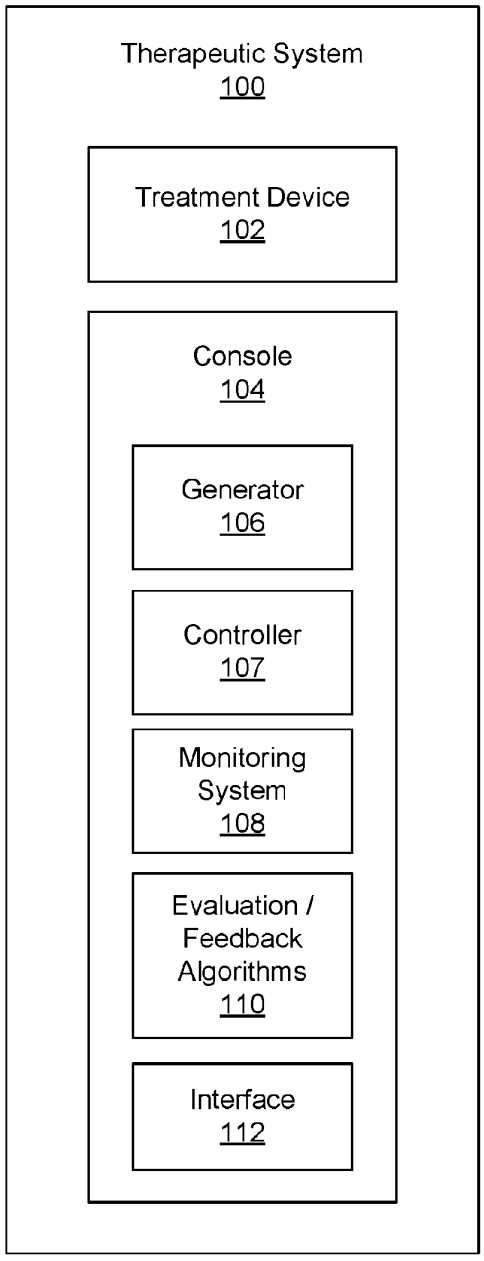

FIG. 1A

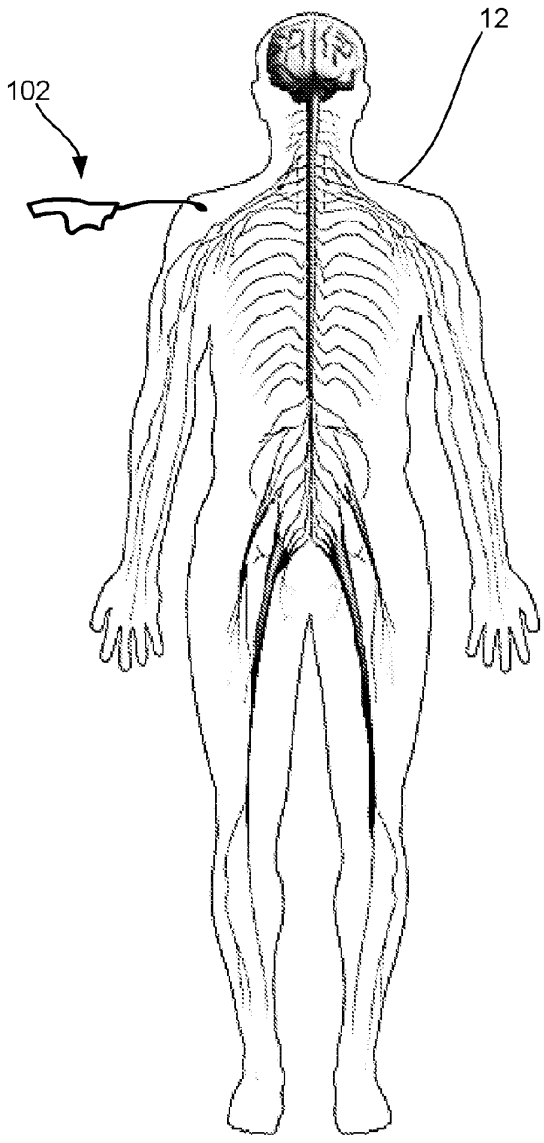

FIG. 1B

Aerin Exhibit 1011, Page 386 of 2183
Aerin Medical Inc. v. Neurent Medical Ltd.
IPR2025-01126

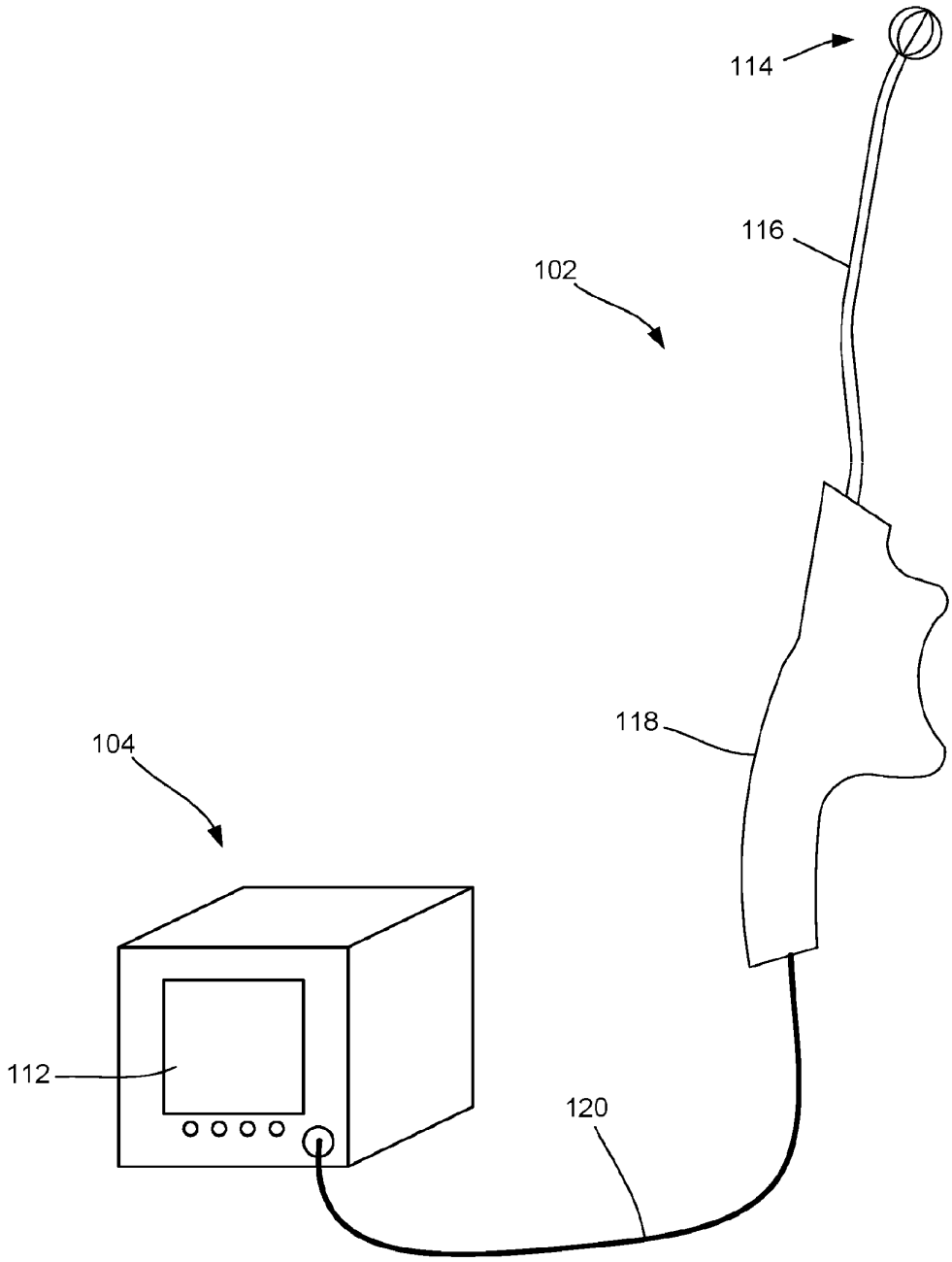

FIG. 2

Aerin Exhibit 1011, Page 387 of 2183
Aerin Medical Inc. v. Neurent Medical Ltd.
IPR2025-01126

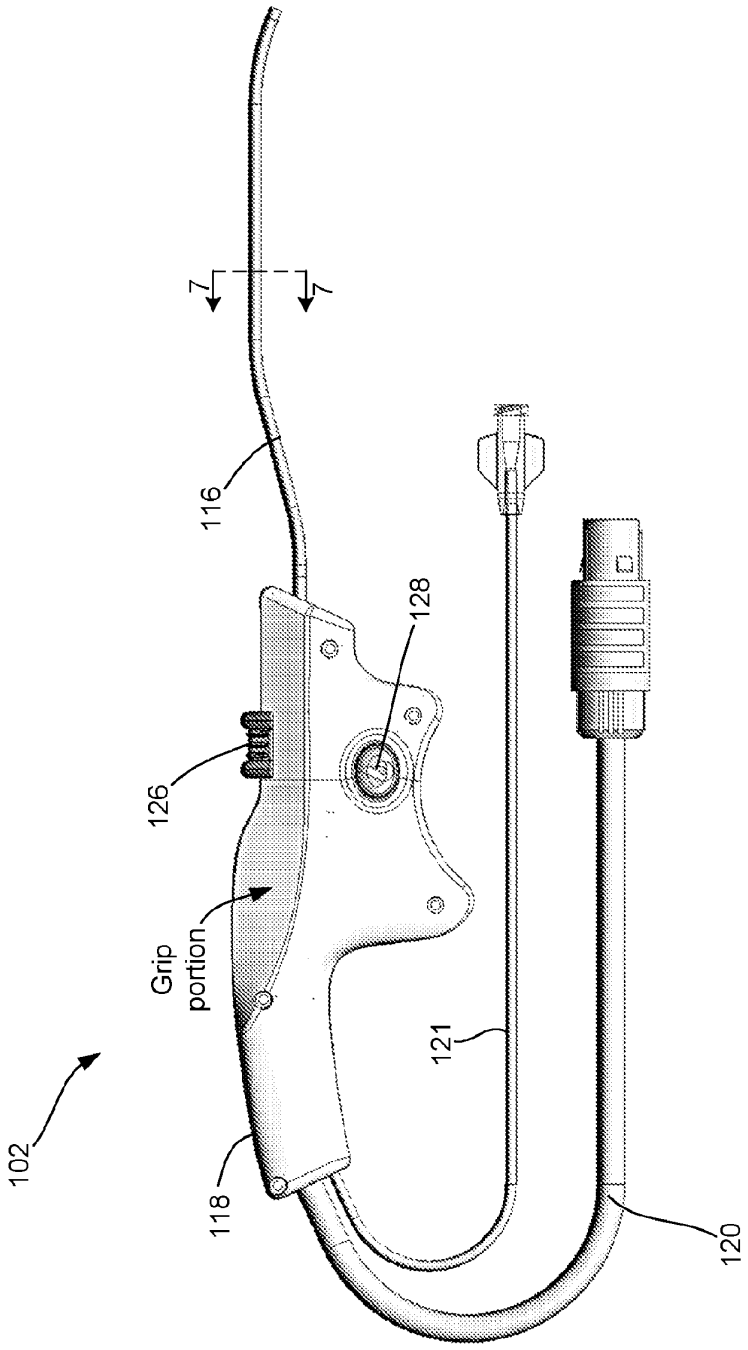

FIG. 3

Aerin Exhibit 1011, Page 388 of 2183
Aerin Medical Inc. v. Neurent Medical Ltd.
IPR2025-01126

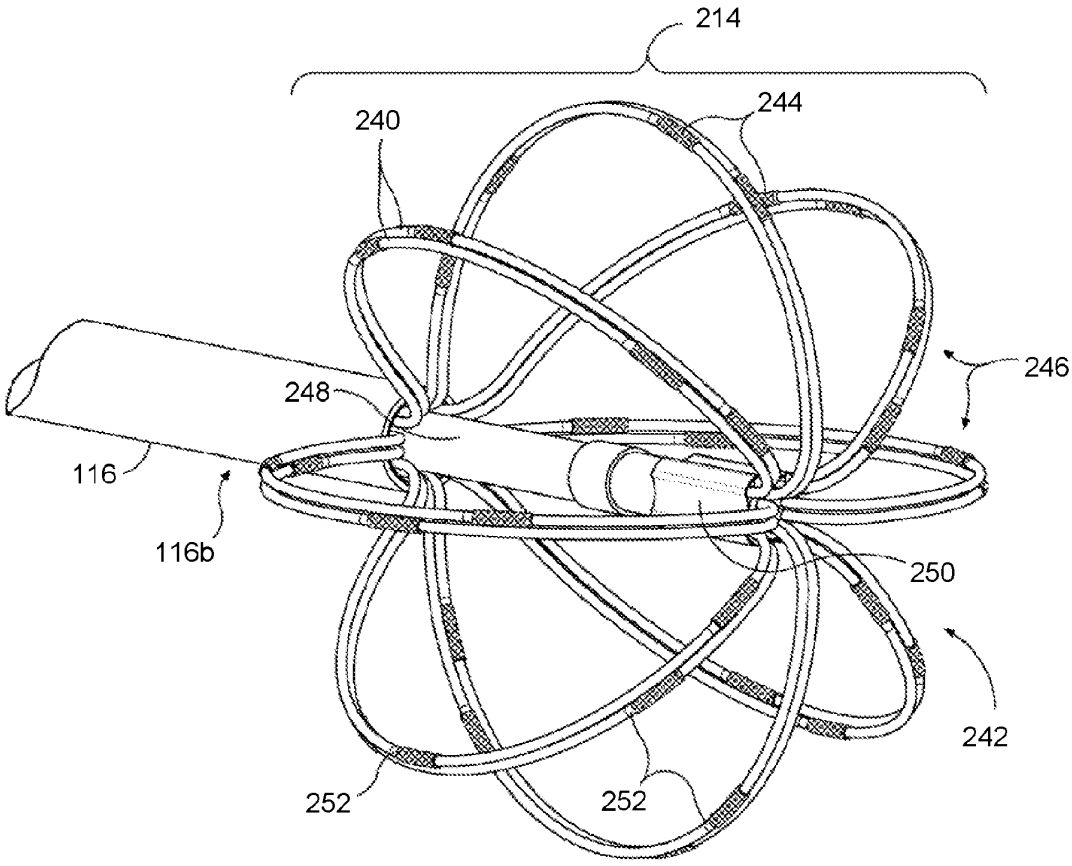

FIG. 4

Aerin Exhibit 1011, Page 389 of 2183
Aerin Medical Inc. v. Neurent Medical Ltd.
IPR2025-01126

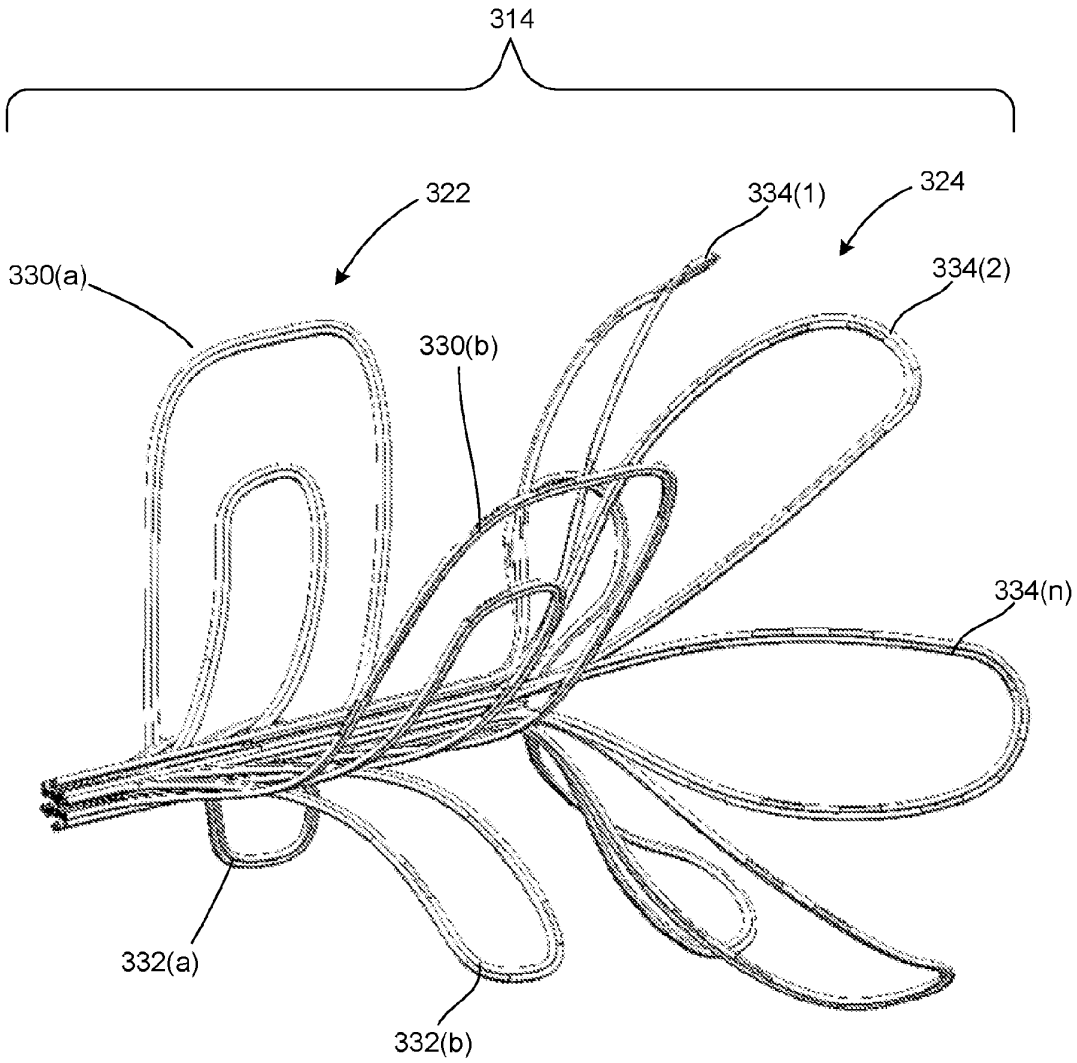

FIG. 5A

Aerin Exhibit 1011, Page 390 of 2183
Aerin Medical Inc. v. Neurent Medical Ltd.
IPR2025-01126

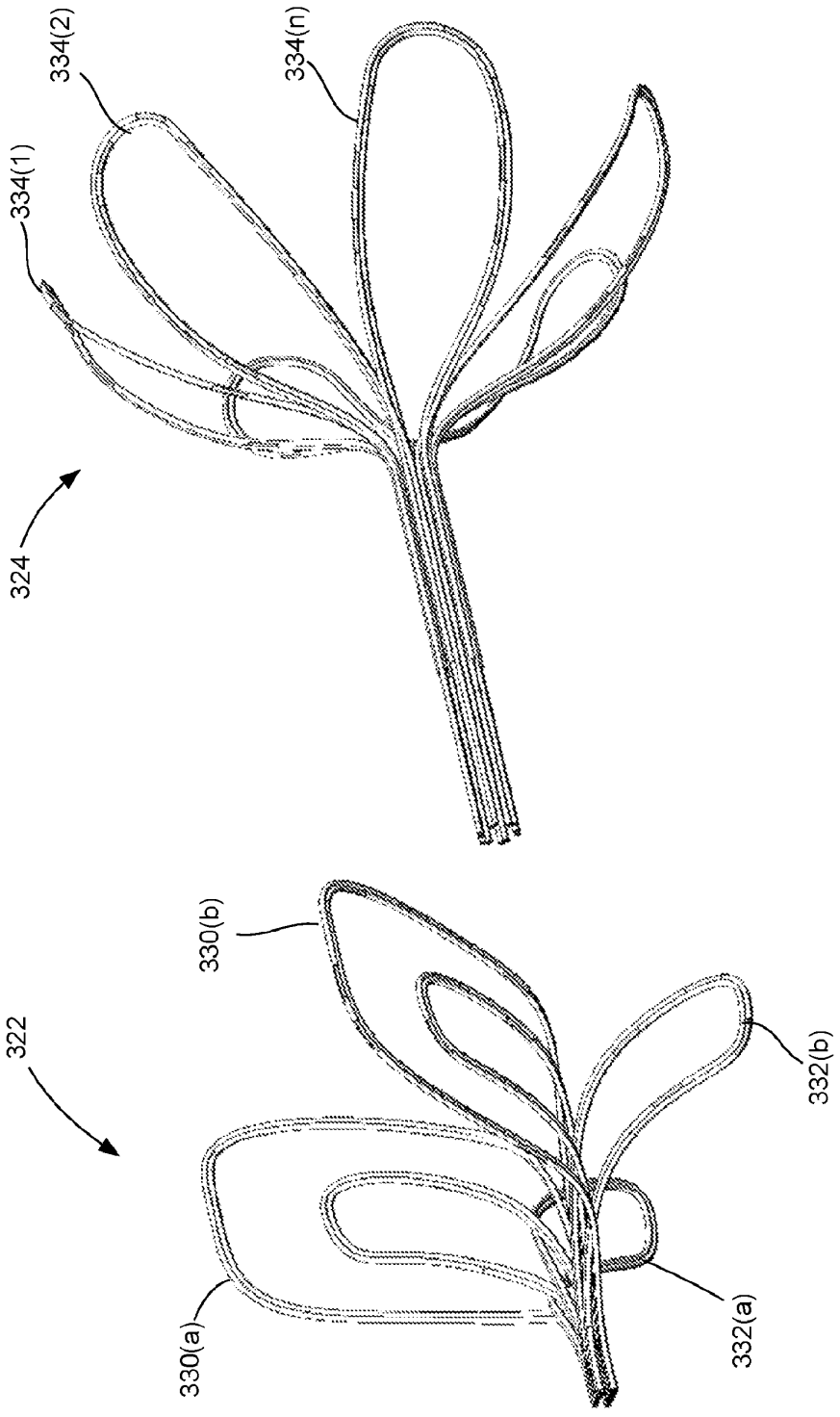

FIG. 5B

Aerin Exhibit 1011, Page 391 of 2183
Aerin Medical Inc. v. Neurent Medical Ltd.
IPR2025-01126

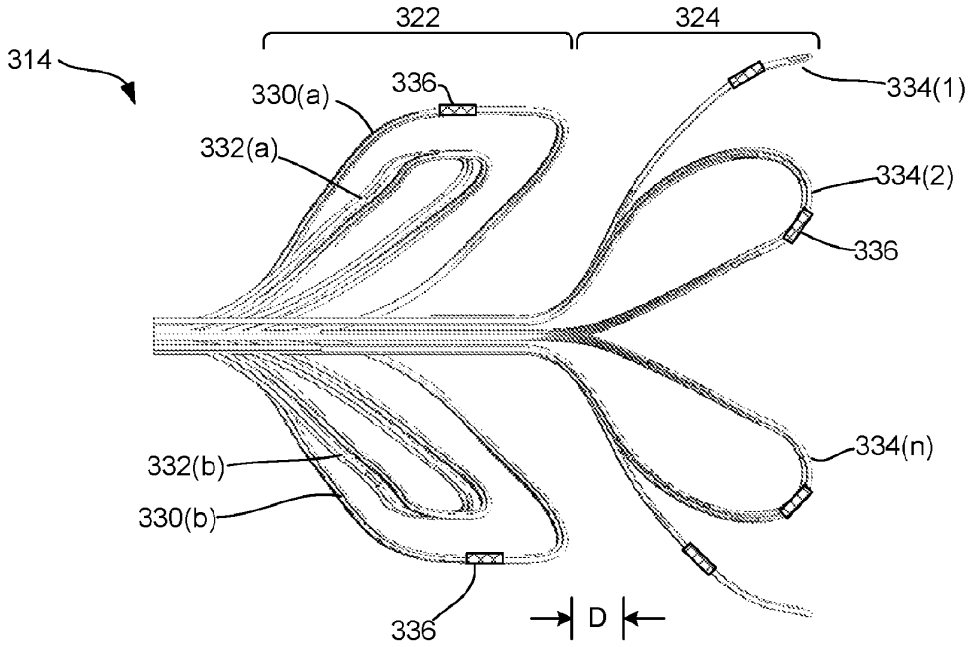

FIG. 5C

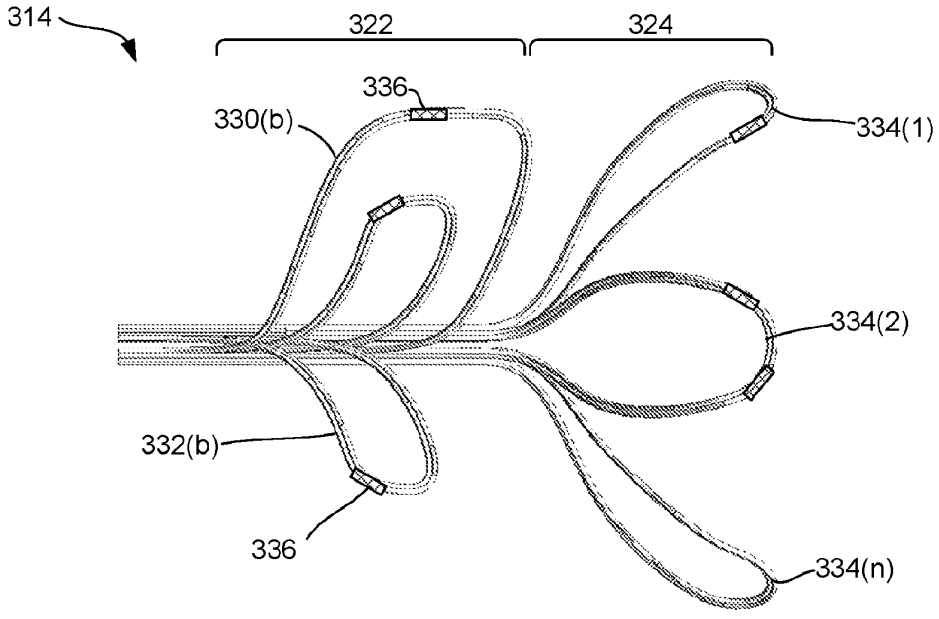

FIG. 5D

Aerin Exhibit 1011, Page 392 of 2183
Aerin Medical Inc. v. Neurent Medical Ltd.
IPR2025-01126

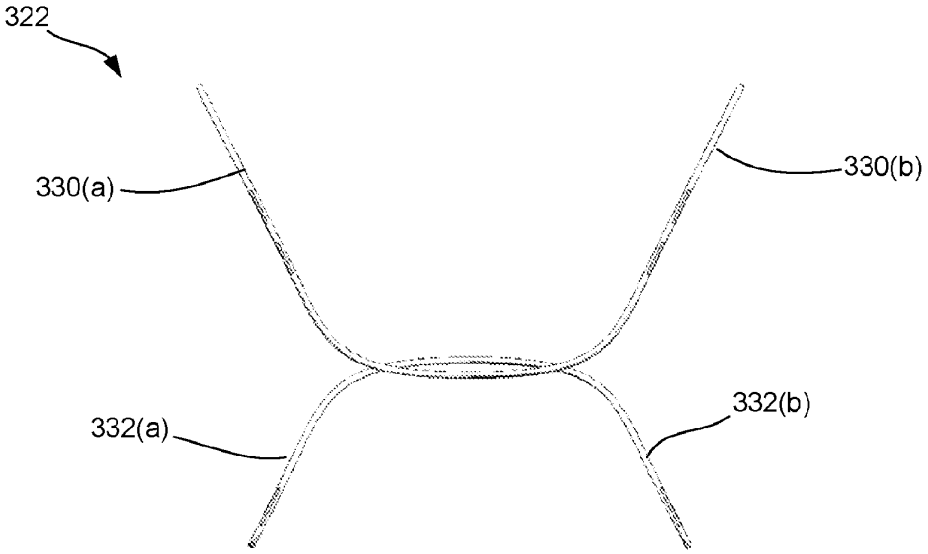

FIG. 5E

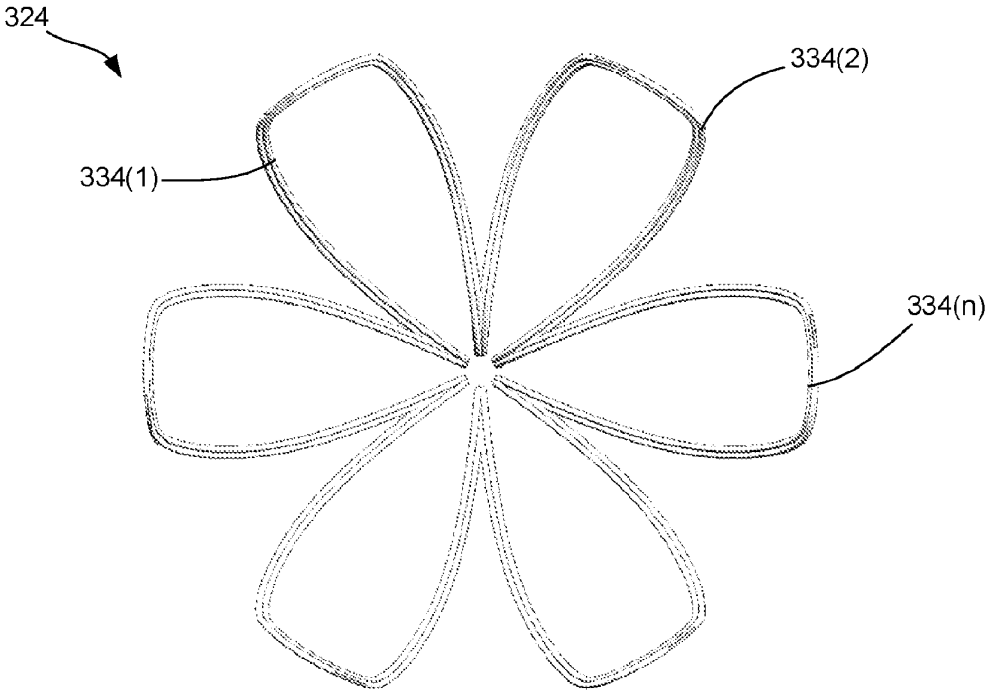

FIG. 5F

Aerin Exhibit 1011, Page 393 of 2183
Aerin Medical Inc. v. Neurent Medical Ltd.
IPR2025-01126

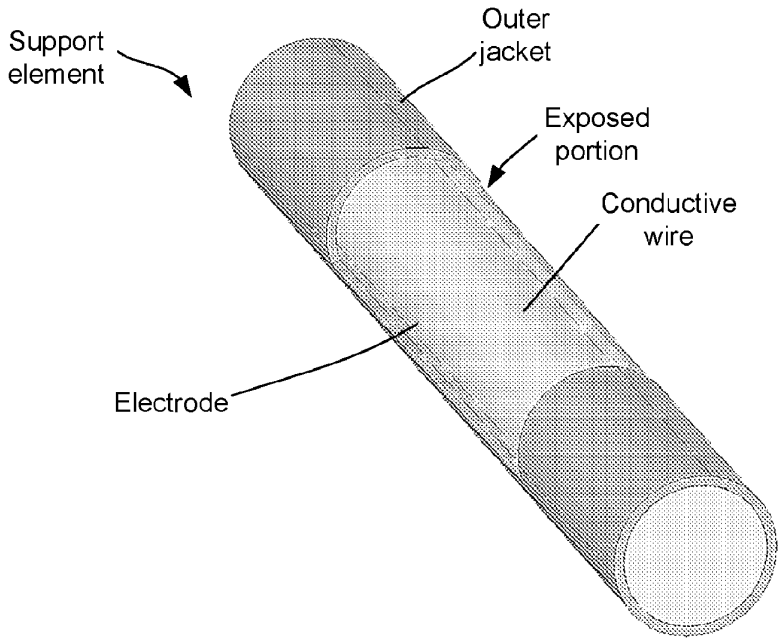

FIG. 6

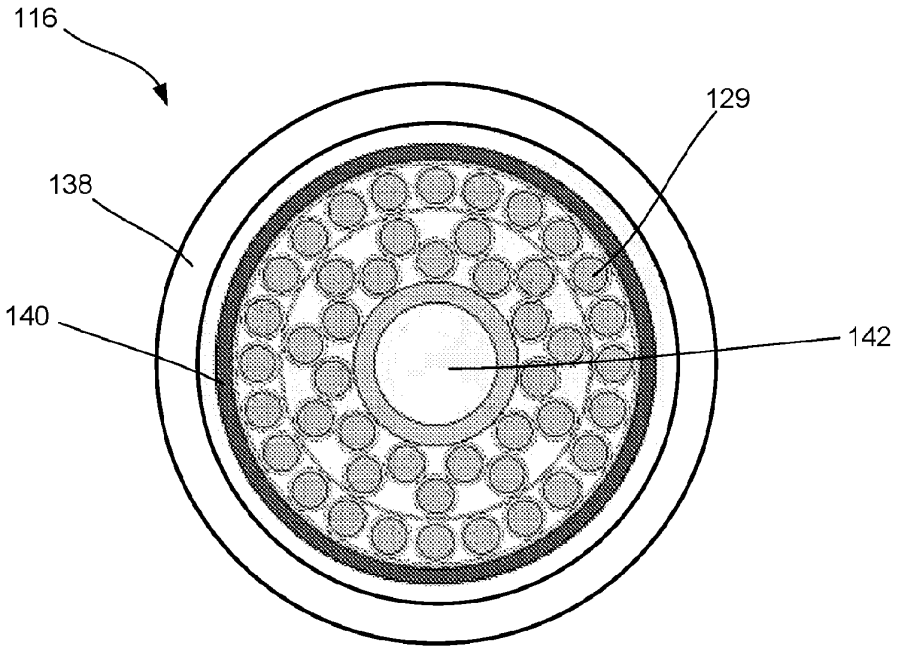

FIG. 7

Aerin Exhibit 1011, Page 394 of 2183
Aerin Medical Inc. v. Neurent Medical Ltd.
IPR2025-01126

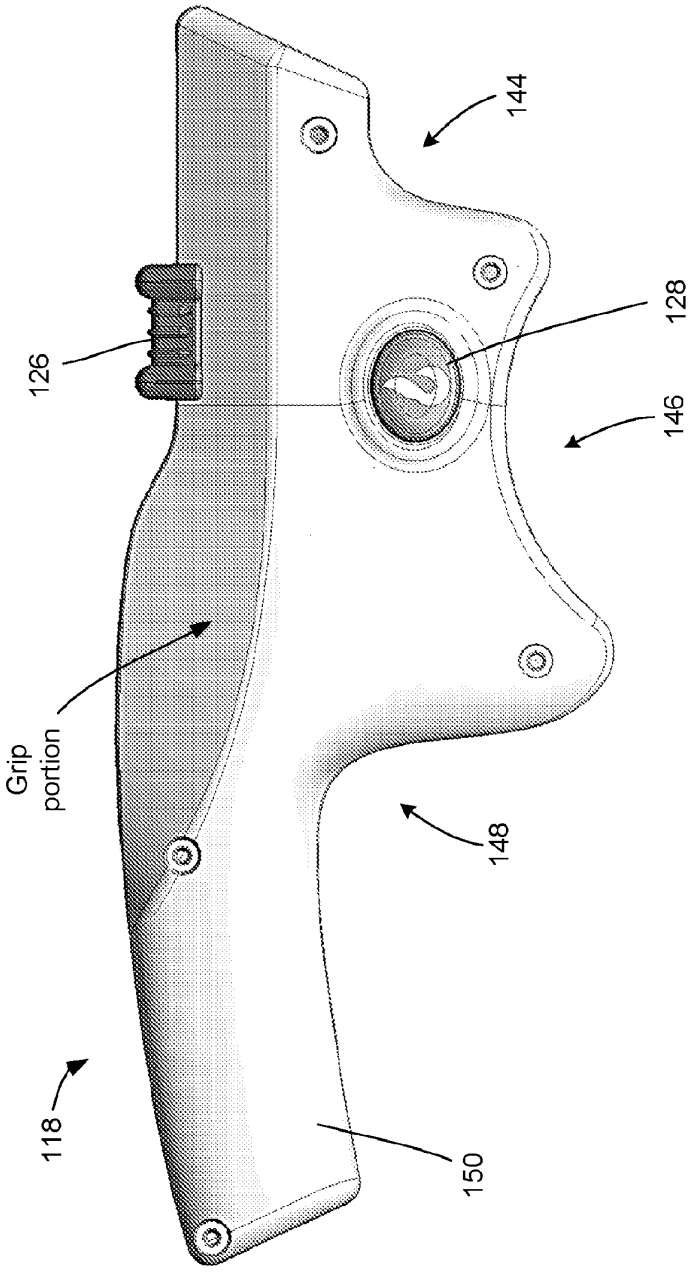

FIG. 8A

Aerin Exhibit 1011, Page 395 of 2183
Aerin Medical Inc. v. Neurent Medical Ltd.
IPR2025-01126

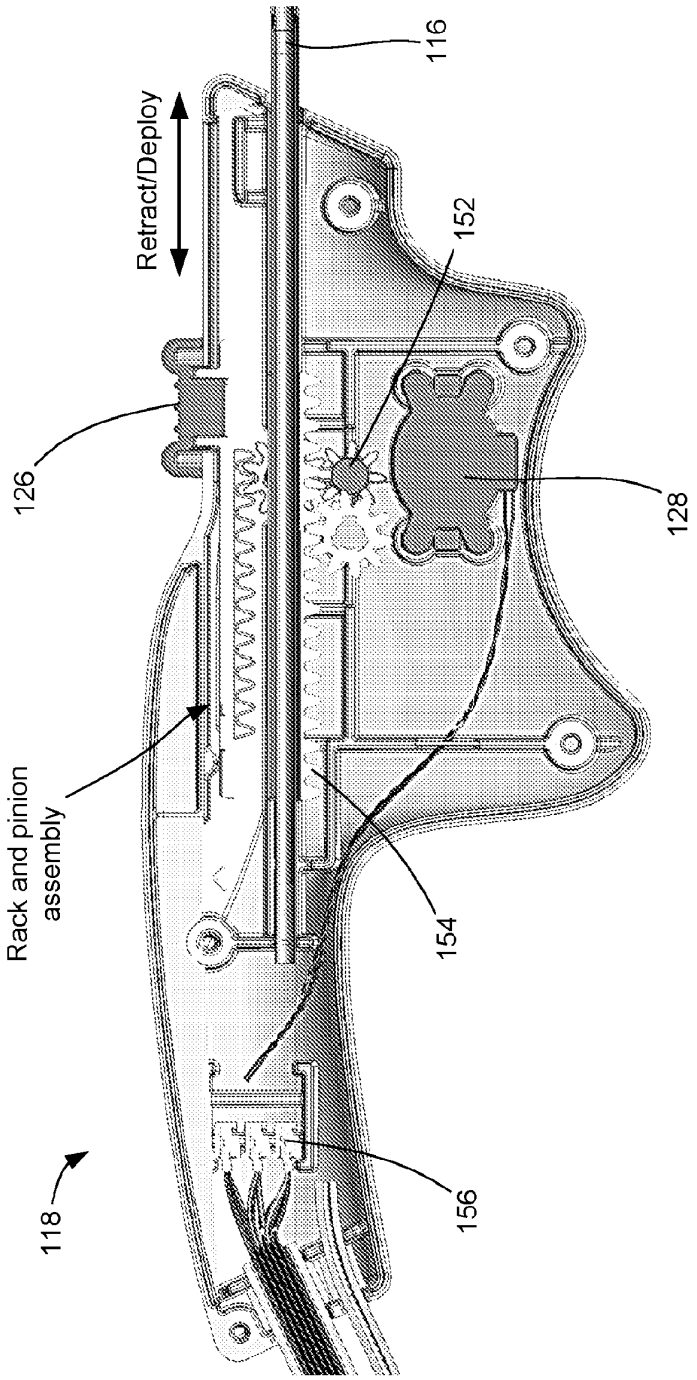

FIG. 8B

Aerin Exhibit 1011, Page 396 of 2183
Aerin Medical Inc. v. Neurent Medical Ltd.
IPR2025-01126

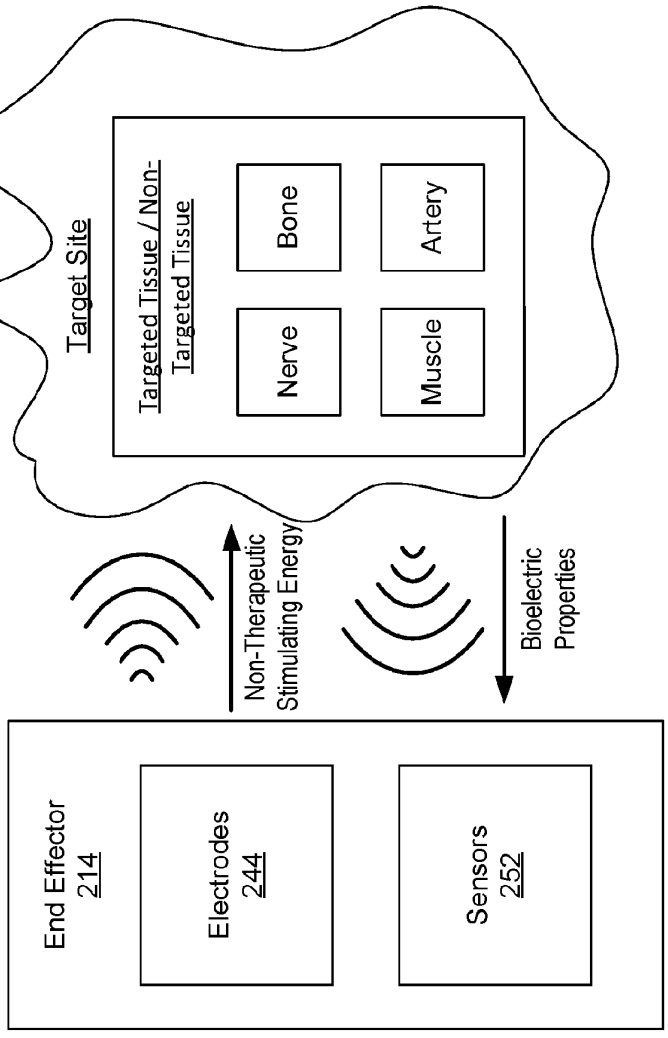

FIG. 9A

Aerin Exhibit 1011, Page 397 of 2183
Aerin Medical Inc. v. Neurent Medical Ltd.
IPR2025-01126

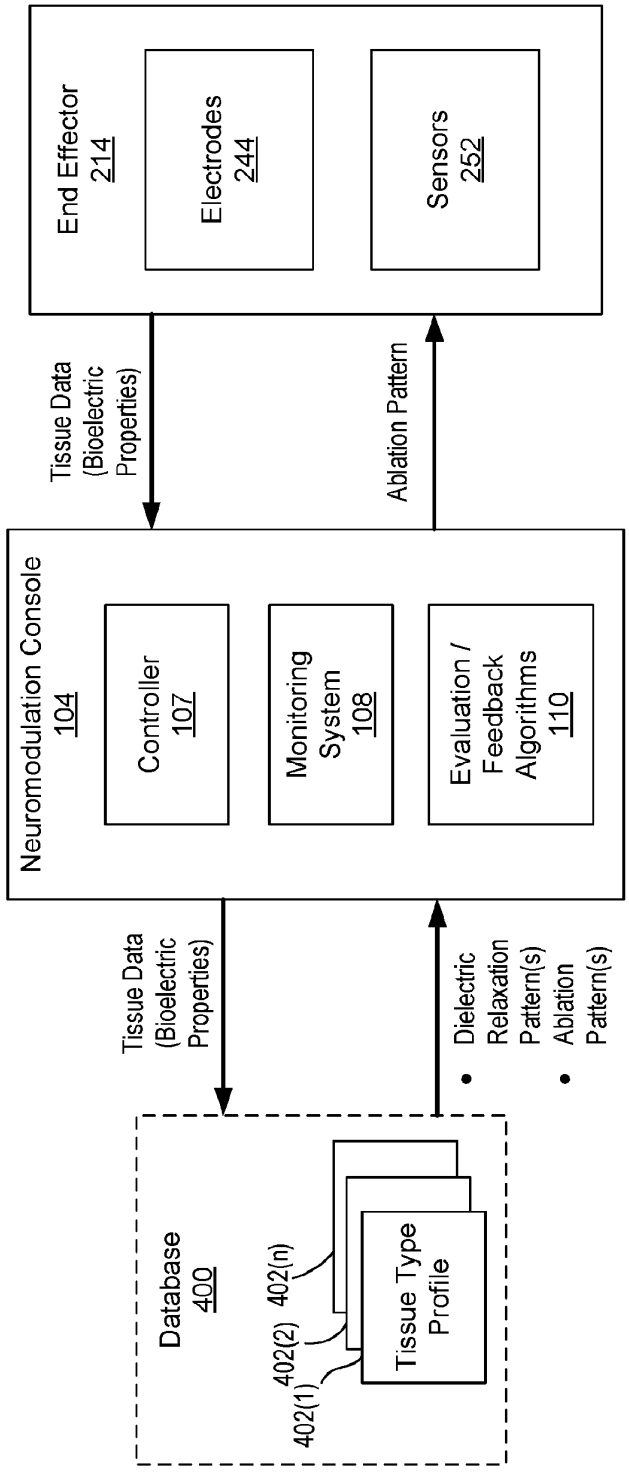

FIG. 9B

Aerin Exhibit 1011, Page 398 of 2183
Aerin Medical Inc. v. Neurent Medical Ltd.
IPR2025-01126

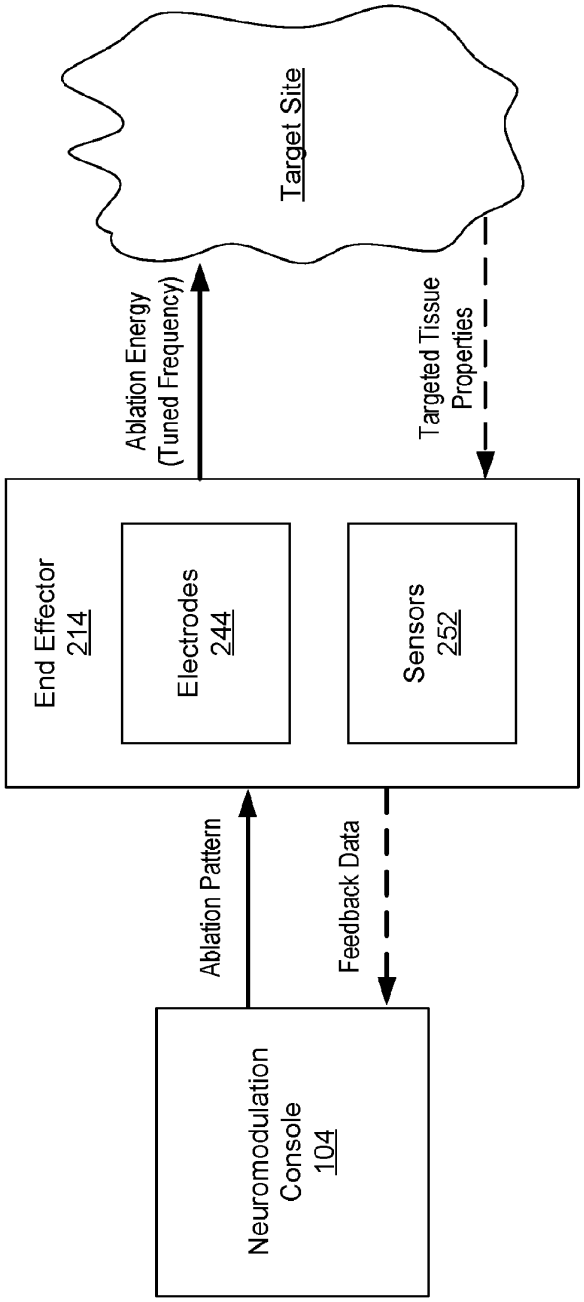

FIG. 9C

Aerin Exhibit 1011, Page 399 of 2183
Aerin Medical Inc. v. Neurent Medical Ltd.
IPR2025-01126

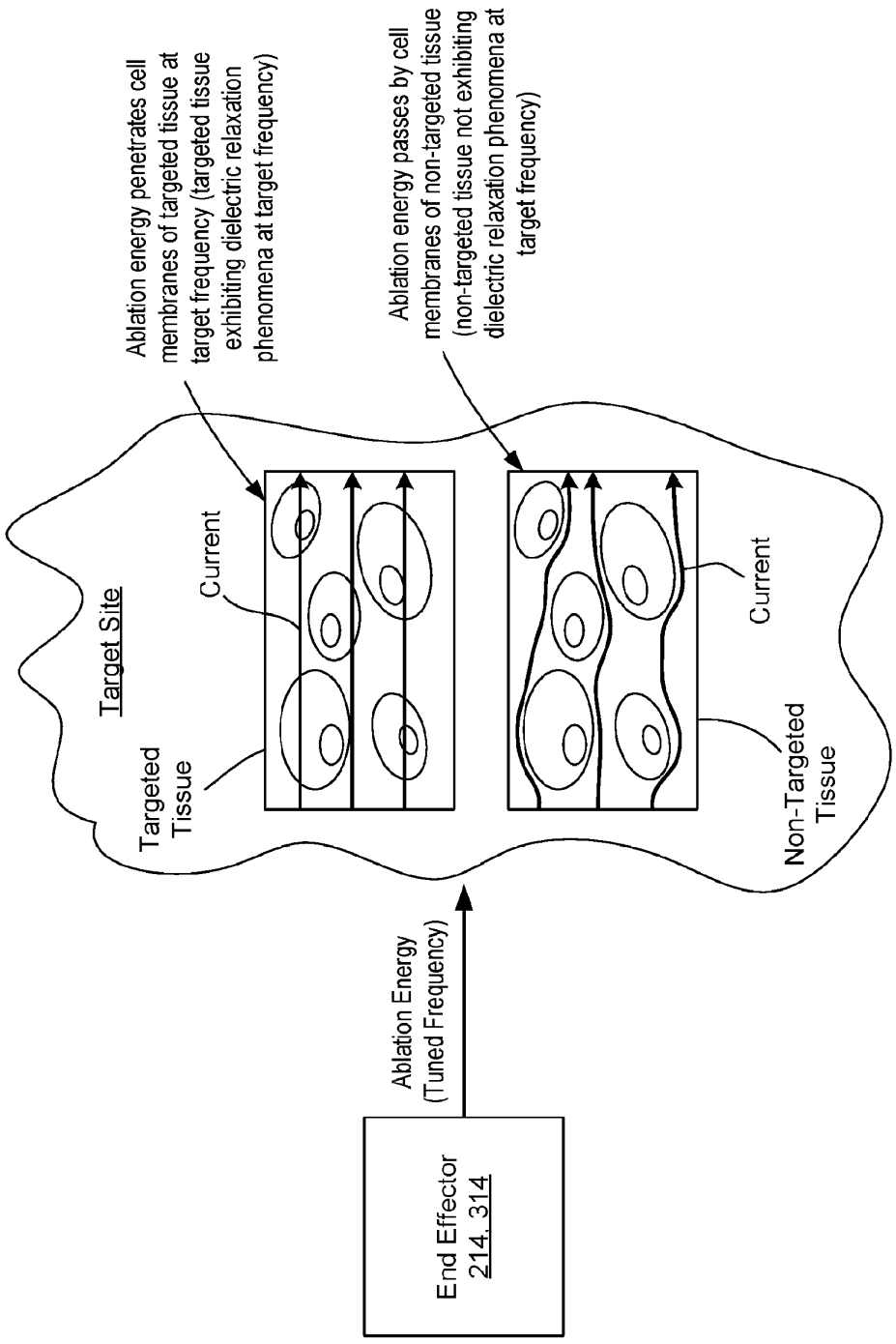

FIG. 10

Aerin Exhibit 1011, Page 400 of 2183
Aerin Medical Inc. v. Neurent Medical Ltd.
IPR2025-01126

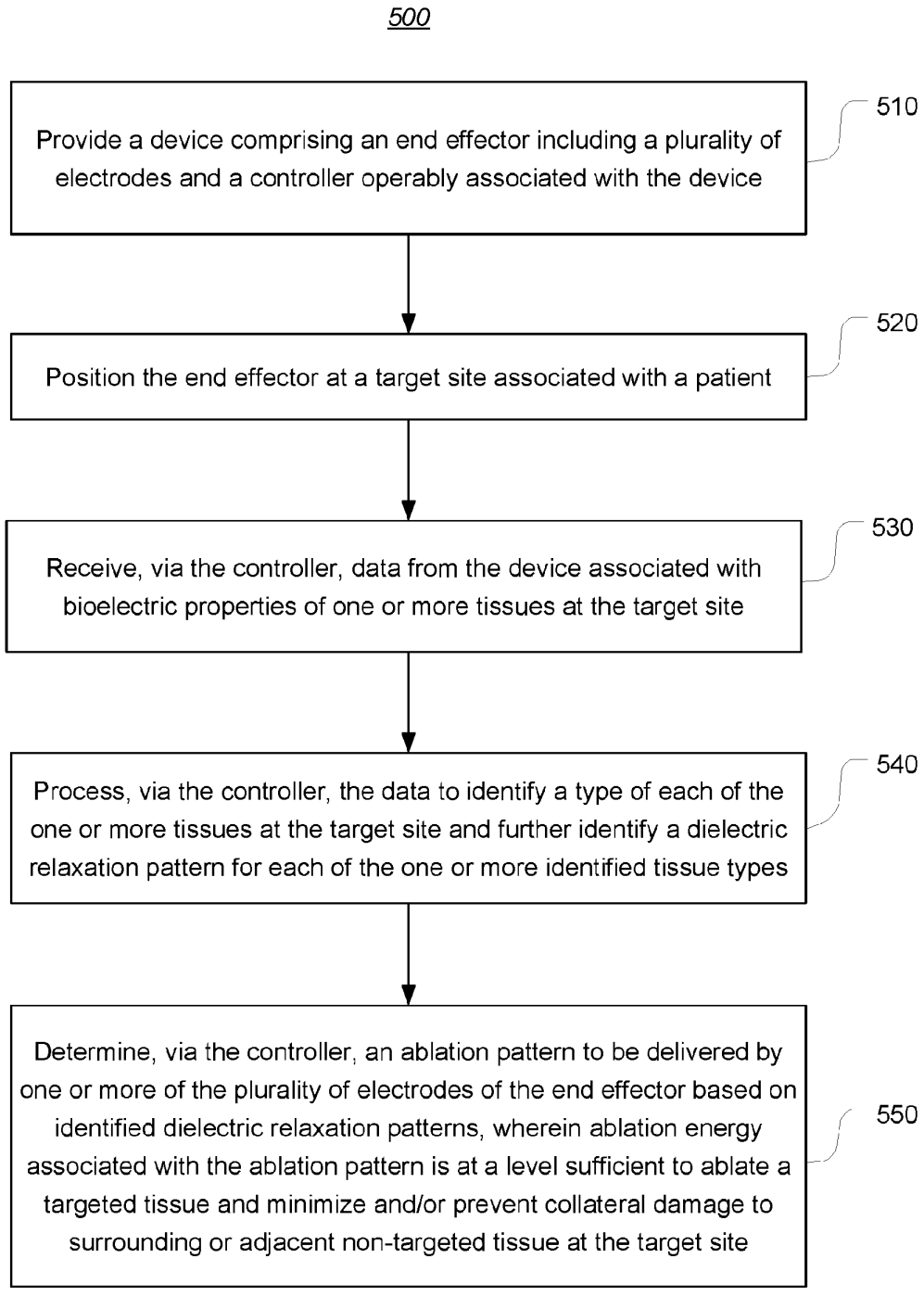

FIG. 11

Aerin Exhibit 1011, Page 401 of 2183
Aerin Medical Inc. v. Neurent Medical Ltd.
IPR2025-01126

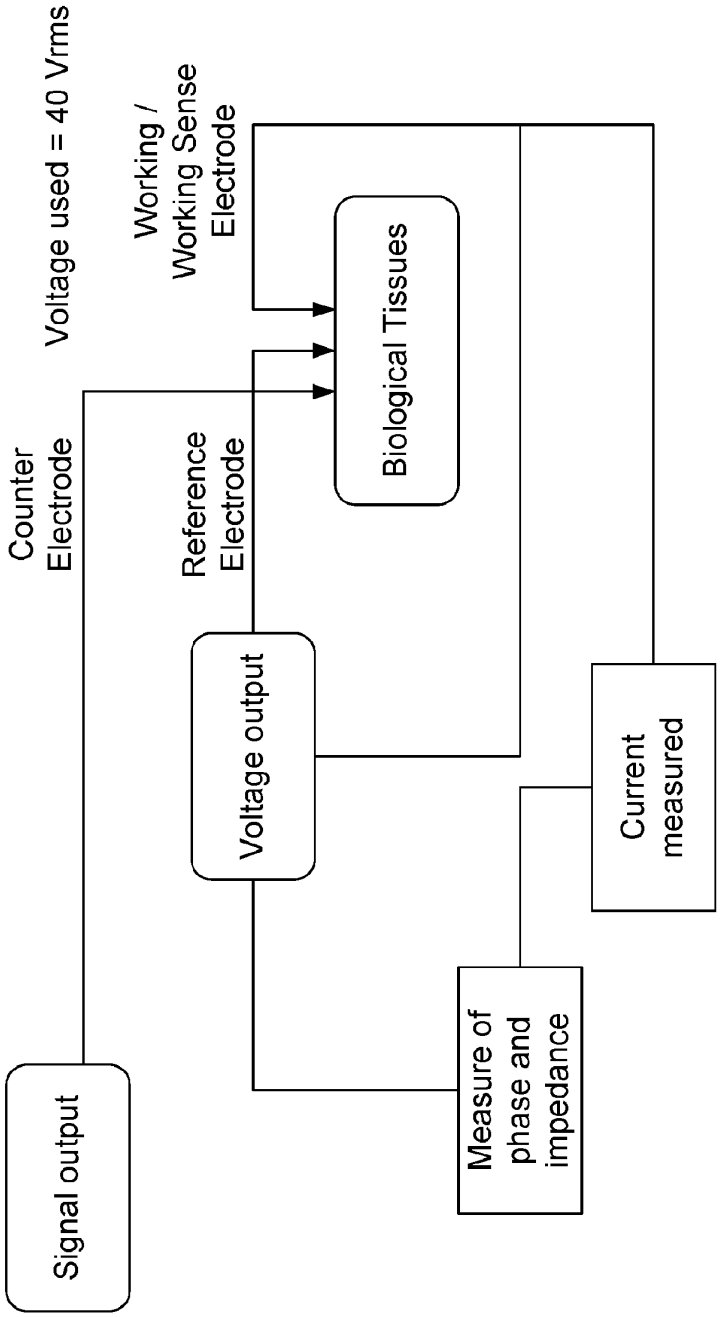

FIG. 12

Aerin Exhibit 1011, Page 402 of 2183
Aerin Medical Inc. v. Neurent Medical Ltd.
IPR2025-01126

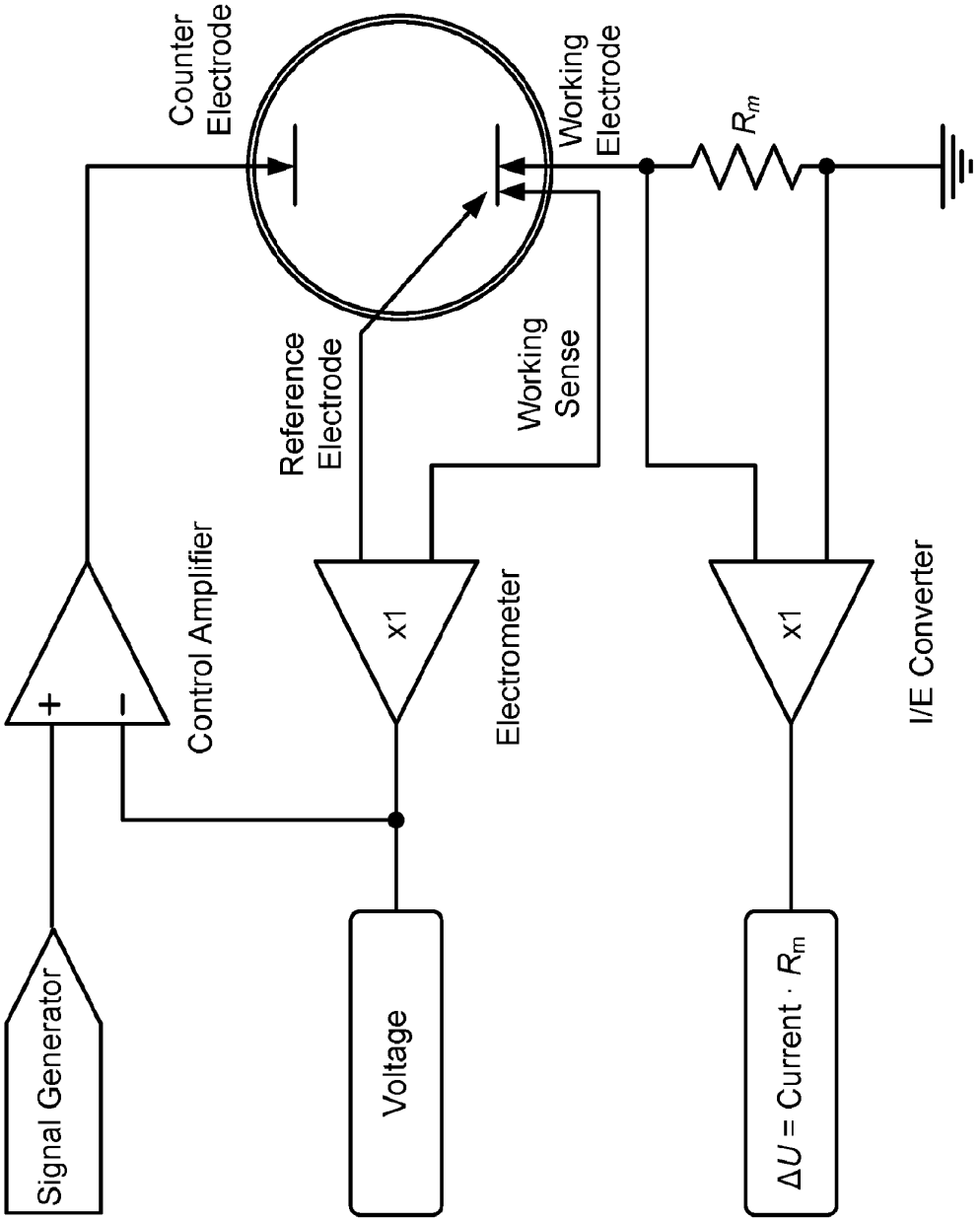

FIG. 12A

Aerin Exhibit 1011, Page 403 of 2183
Aerin Medical Inc. v. Neurent Medical Ltd.
IPR2025-01126

Dielectrical Properties: Spinal Cord Tissue vs. Muscle Tissue

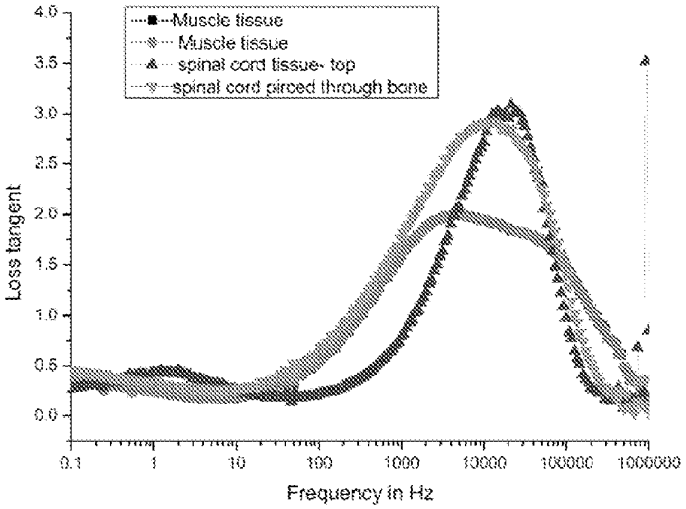

FIG. 13A

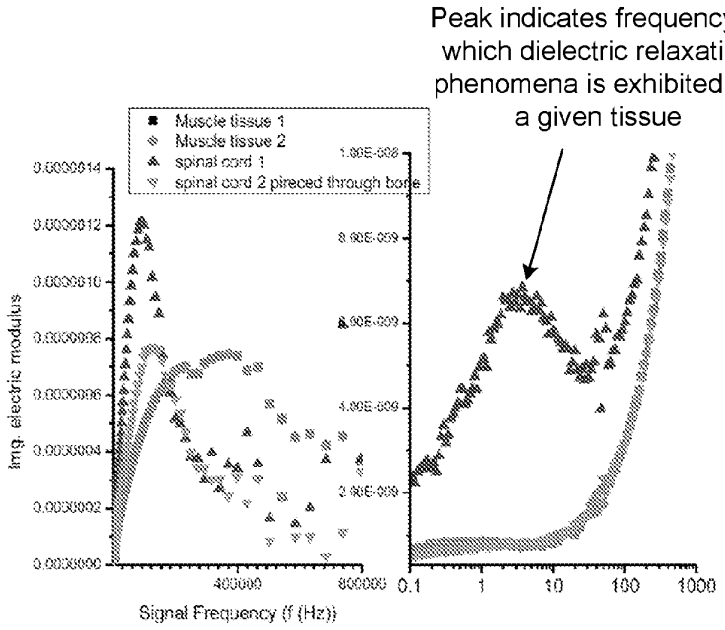

FIG. 13B

Aerin Exhibit 1011, Page 404 of 2183
Aerin Medical Inc. v. Neurent Medical Ltd.
IPR2025-01126

HN Relaxation Phenomena: Upper Spinal Cord

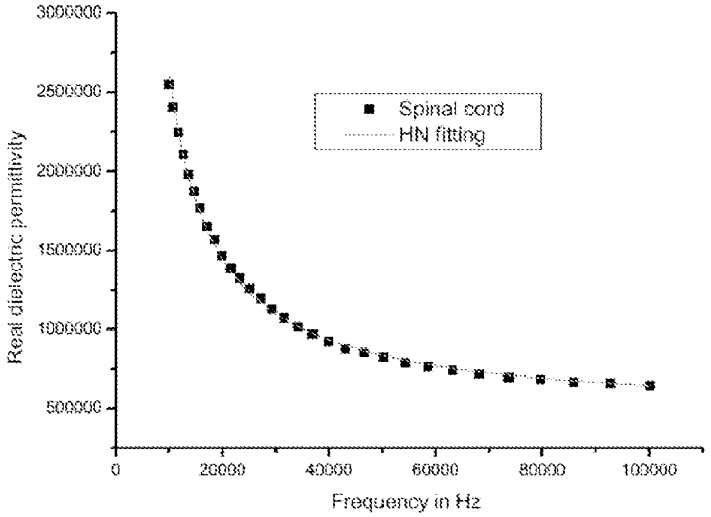

FIG. 14A

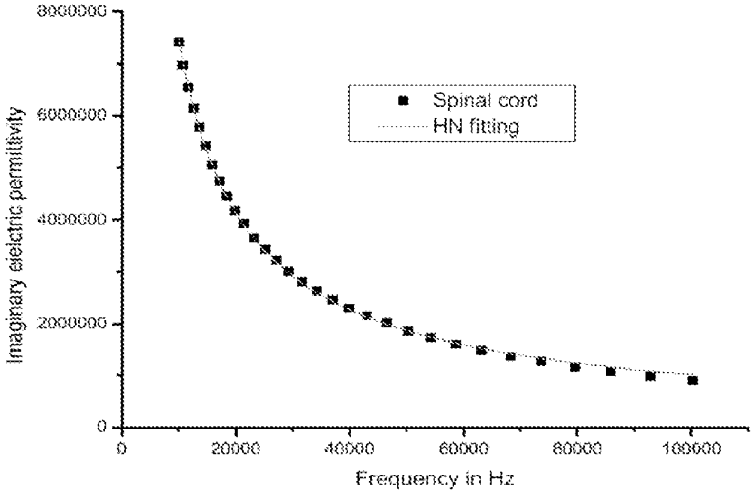

FIG. 14B

Aerin Exhibit 1011, Page 405 of 2183
Aerin Medical Inc. v. Neurent Medical Ltd.
IPR2025-01126

HN Relaxation Phenomena: Lower Spinal Cord

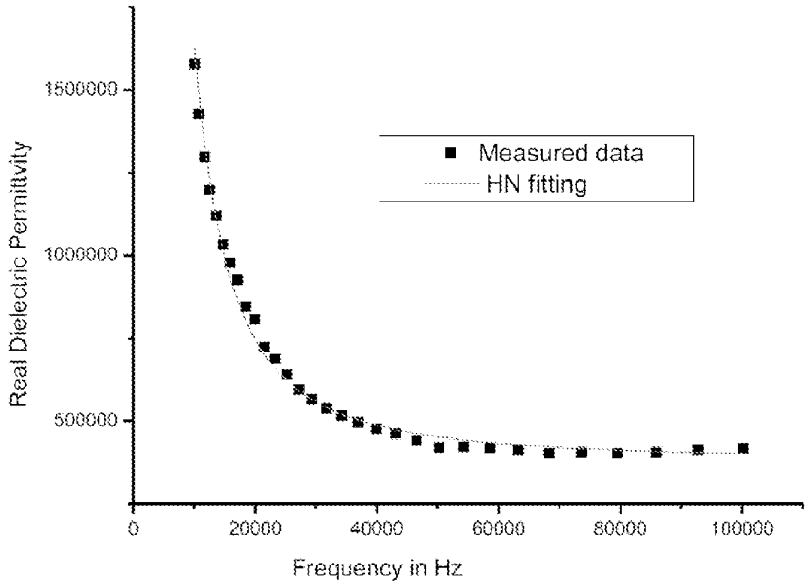

FIG. 14C

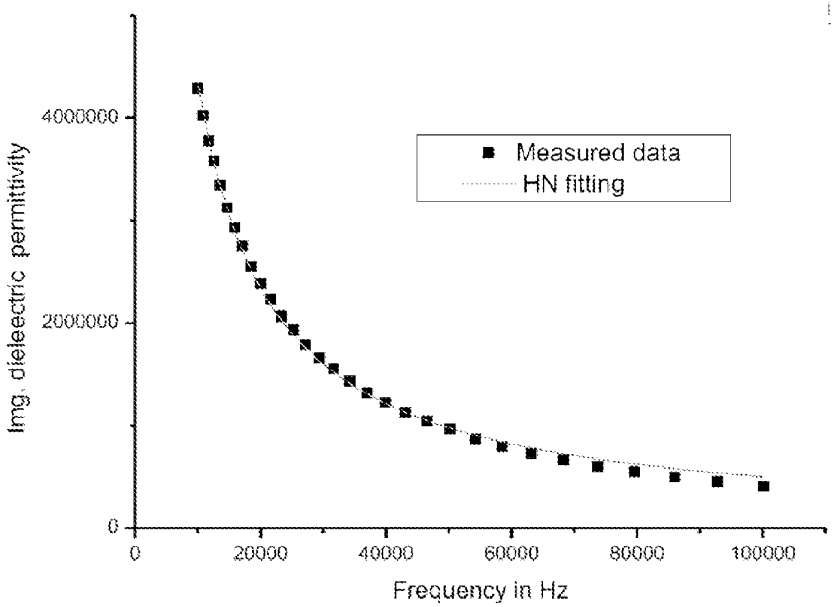

FIG. 14D

Aerin Exhibit 1011, Page 406 of 2183
Aerin Medical Inc. v. Neurent Medical Ltd.
IPR2025-01126

HN Relaxation Phenomena: Lower Back Muscle

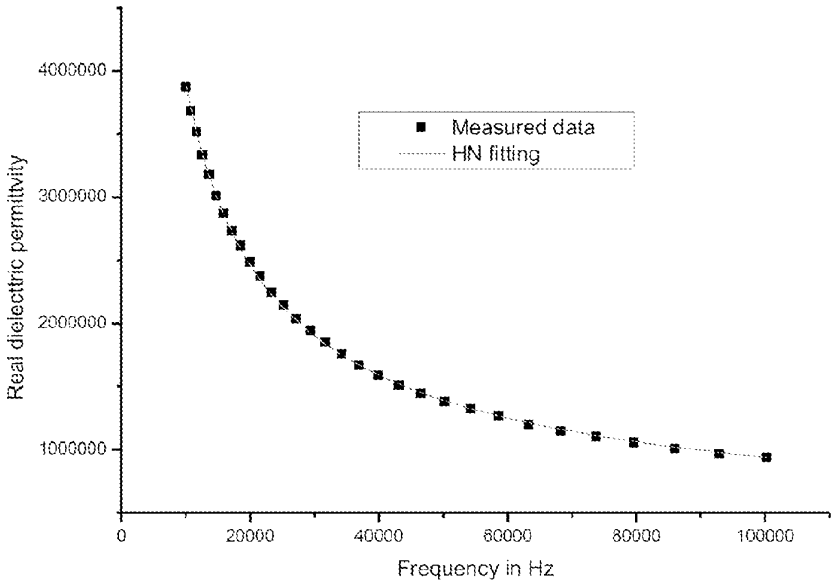

FIG. 14E

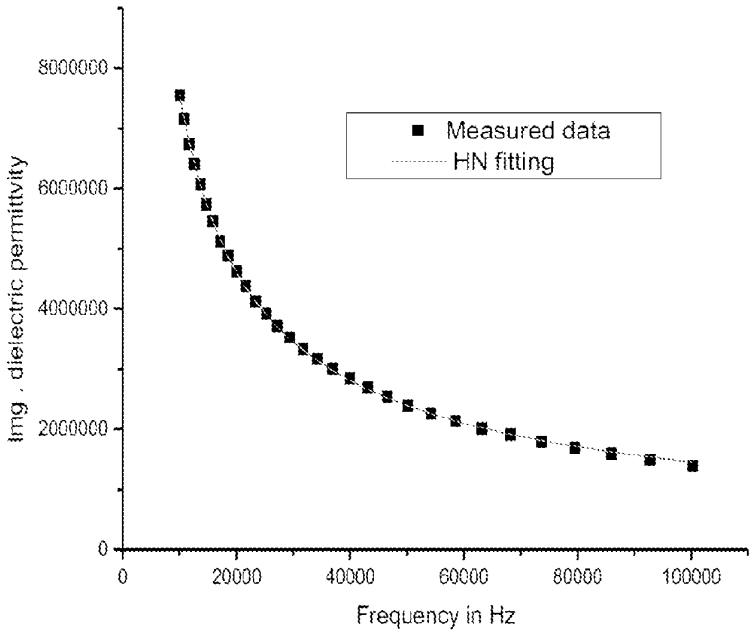

FIG. 14F

Aerin Exhibit 1011, Page 407 of 2183
Aerin Medical Inc. v. Neurent Medical Ltd.
IPR2025-01126

HN Relaxation Phenomena: Upper Back Muscle

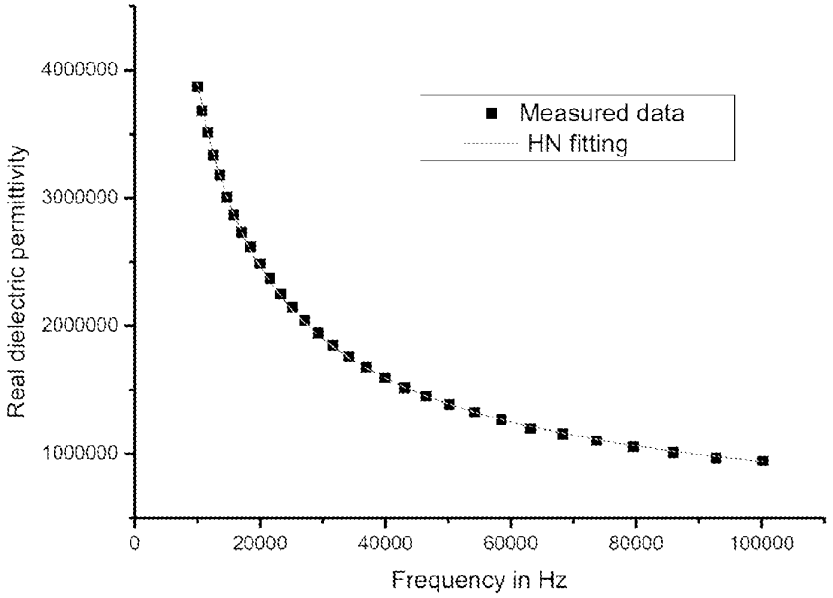

FIG. 14G

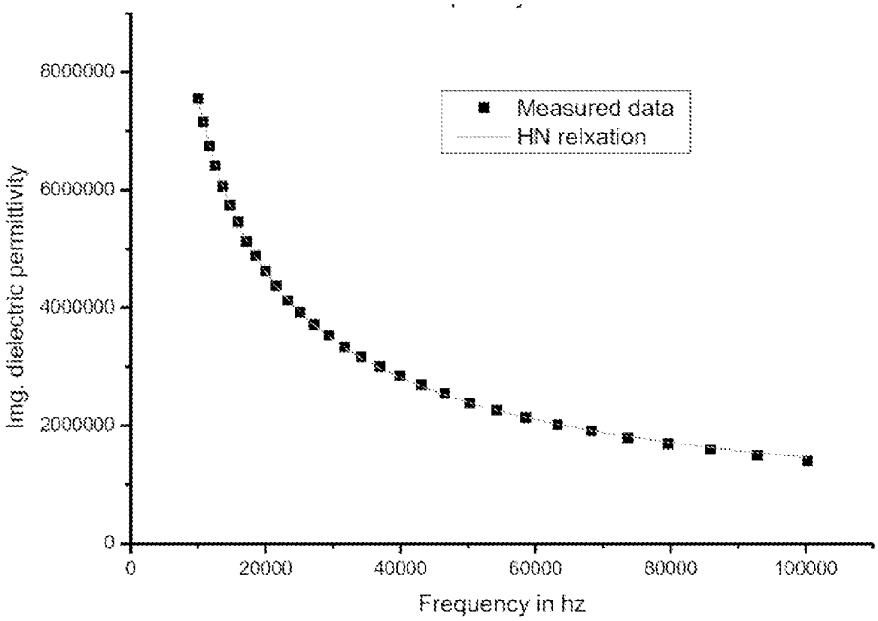

FIG. 14H

Aerin Exhibit 1011, Page 408 of 2183
Aerin Medical Inc. v. Neurent Medical Ltd.
IPR2025-01126

Dielectrical Properties: Different Portions of Turbinate Tissue

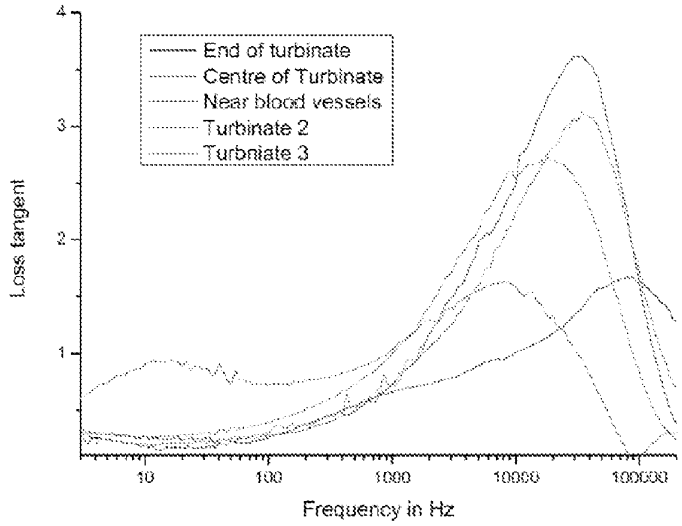

FIG. 15A

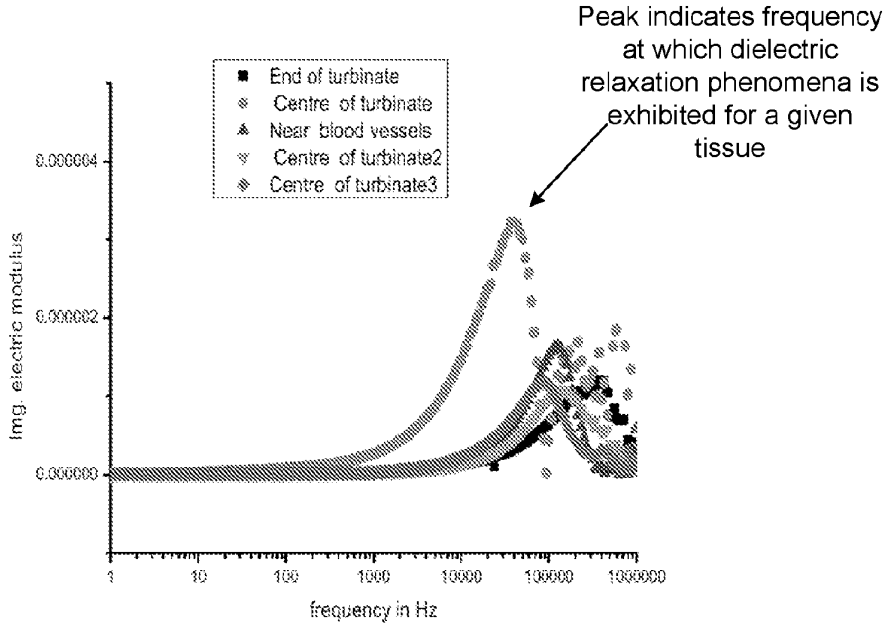

FIG. 15B

Aerin Exhibit 1011, Page 409 of 2183
Aerin Medical Inc. v. Neurent Medical Ltd.
IPR2025-01126

HN Relaxation Phenomena: End of Turbinate

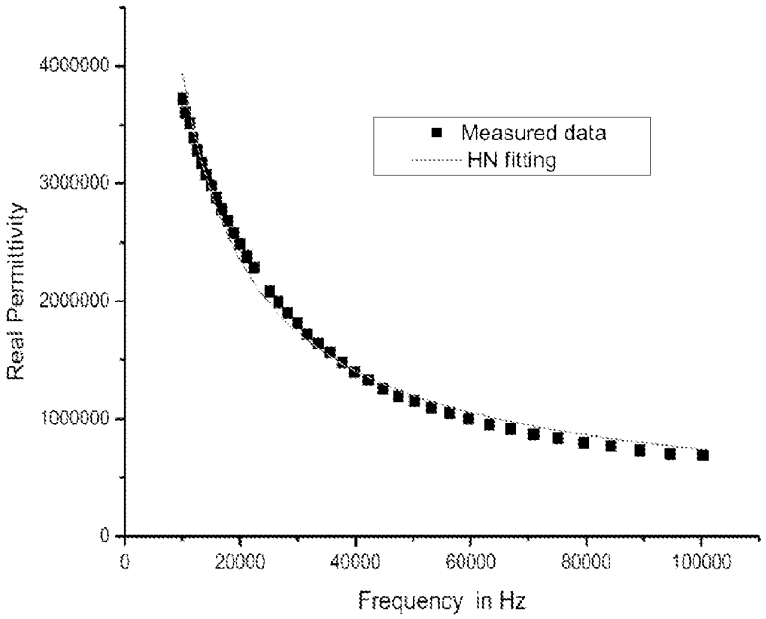

FIG. 16A

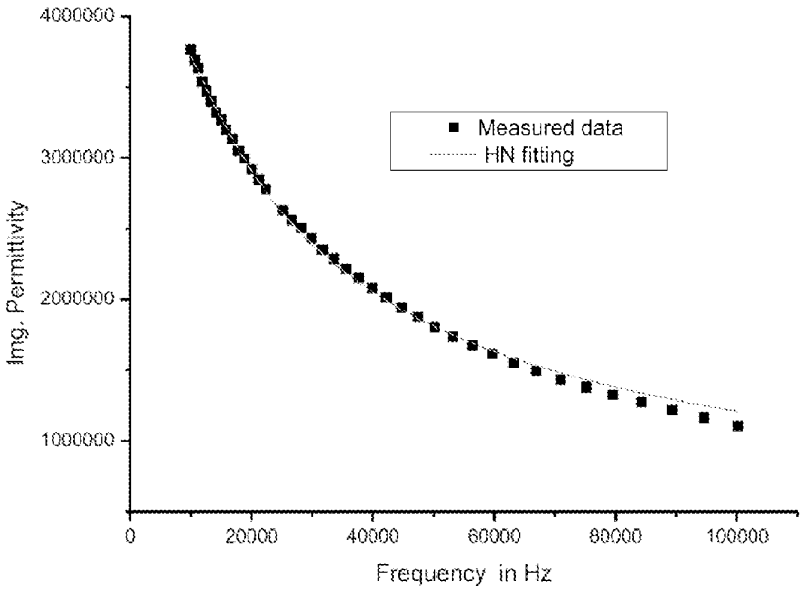

FIG. 16B

Aerin Exhibit 1011, Page 410 of 2183
Aerin Medical Inc. v. Neurent Medical Ltd.
IPR2025-01126

HN Relaxation Phenomena: Center of Turbinate

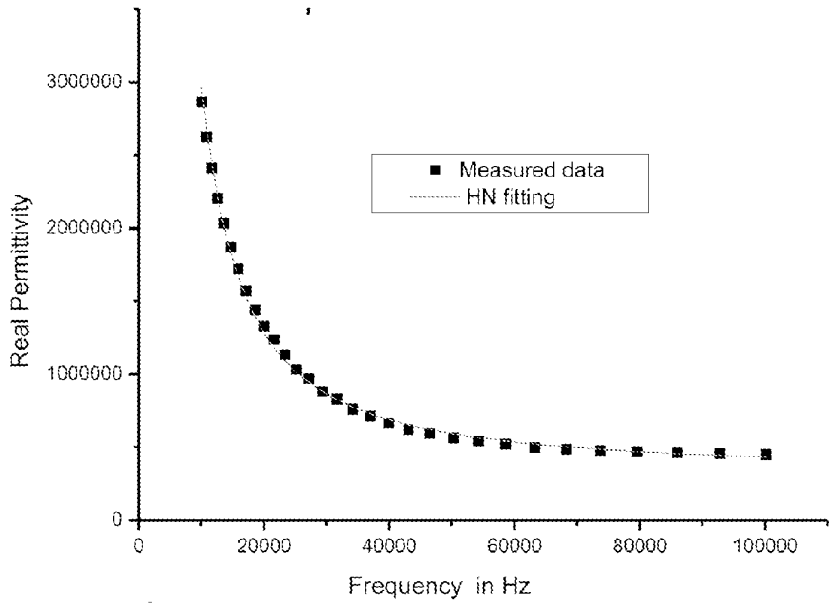

FIG. 16C

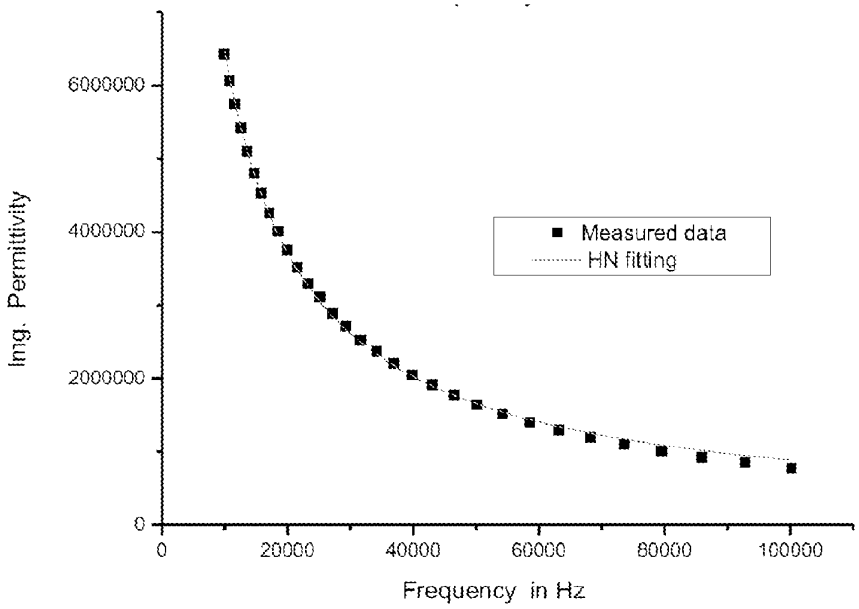

FIG. 16D

Aerin Exhibit 1011, Page 411 of 2183
Aerin Medical Inc. v. Neurent Medical Ltd.
IPR2025-01126

HN Relaxation Phenomena: Near Blood Vessels

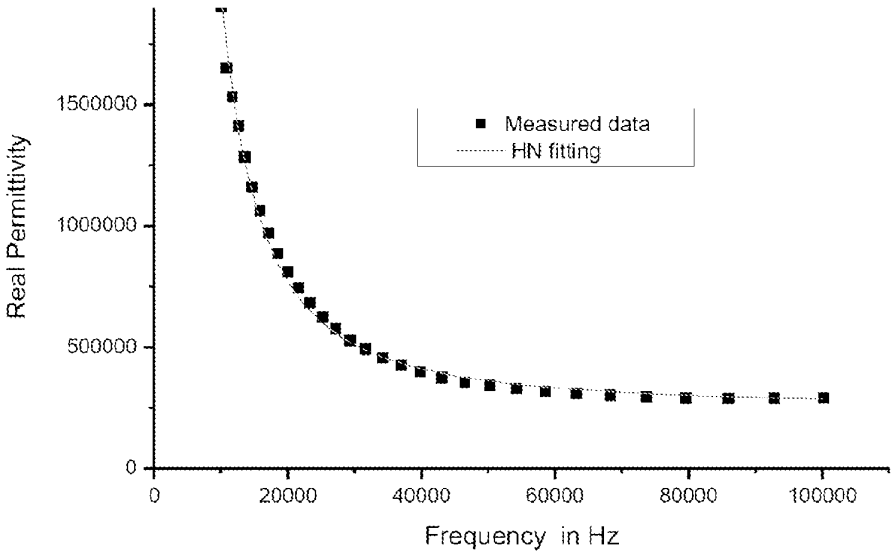

FIG. 16E

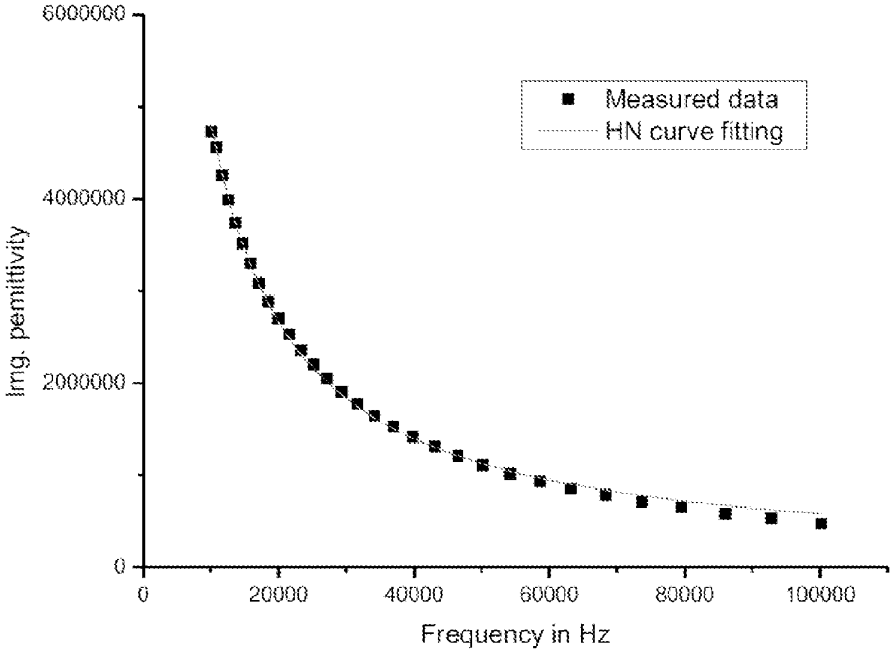

FIG. 16F

Aerin Exhibit 1011, Page 412 of 2183
Aerin Medical Inc. v. Neurent Medical Ltd.
IPR2025-01126

INTERNATIONAL SEARCH REPORT

International application No
PCT/IB2021/000243

A. CLASSIFICATION OF SUBJECT MATTER
INV. A61B18/12
ADD. A61B18/00 A61B18/14

According to International Patent Classification (IPC) or to both national classification and IPC

B. FIELDS SEARCHED

Minimum documentation searched (classification system followed by classification symbols)
A61B

Documentation searched other than minimum documentation to the extent that such documents are included in the fields searched

Electronic data base consulted during the international search (name of data base and, where practicable, search terms used)
EPO-Internal, BIOSIS, COMPENDEX, INSPEC, WPI Data

C. DOCUMENTS CONSIDERED TO BE RELEVANT

Category*	Citation of document, with indication, where appropriate, of the relevant passages	Relevant to claim No.
X	US 2018/133460 A1 (TOWNLEY DAVID [IE] ET AL) 17 May 2018 (2018-05-17) cited in the application paragraphs [0002] - [0003], [0031], [0053] - [0055], [0071], [0119]; figure 3A	23-44
X A	WO 2016/183337 A2 (NAT UNIV IRELAND GALWAY [IE]; QI ZHAN MICHELE [US]) 17 November 2016 (2016-11-17) paragraphs [0002], [0038] - [0044], [0093] - [0096], [0111]; figure 2	23-30, 34,35, 37-44 31-33,36

☐ Further documents are listed in the continuation of Box C.

☒ See patent family annex.

* Special categories of cited documents :

"A" document defining the general state of the art which is not considered to be of particular relevance

"E" earlier application or patent but published on or after the international filing date

"L" document which may throw doubts on priority claim(s) or which is cited to establish the publication date of another citation or other special reason (as specified)

"O" document referring to an oral disclosure, use, exhibition or other means

"P" document published prior to the international filing date but later than the priority date claimed

"T" later document published after the international filing date or priority date and not in conflict with the application but cited to understand the principle or theory underlying the invention

"X" document of particular relevance; the claimed invention cannot be considered novel or cannot be considered to involve an inventive step when the document is taken alone

"Y" document of particular relevance; the claimed invention cannot be considered to involve an inventive step when the document is combined with one or more other such documents, such combination being obvious to a person skilled in the art

"&" document member of the same patent family

Date of the actual completion of the international search	Date of mailing of the international search report
17 August 2021	25/08/2021

Name and mailing address of the ISA/	Authorized officer
European Patent Office, P.B. 5818 Patentlaan 2 NL - 2280 HV Rijswijk Tel. (+31-70) 340-2040, Fax: (+31-70) 340-3016	Aronsson, Fredrik

Form PCT/ISA/210 (second sheet) (April 2005)

INTERNATIONAL SEARCH REPORT

International application No.
PCT/IB2021/000243

Box No. II Observations where certain claims were found unsearchable (Continuation of item 2 of first sheet)

This international search report has not been established in respect of certain claims under Article 17(2)(a) for the following reasons:

1. [X] Claims Nos.: 1-22
because they relate to subject matter not required to be searched by this Authority, namely:

The subject-matter of claims 1-22 refers to a surgical and therapeutic treatment.According to the PCT neither search (Rule 39.1(iv) PCT) nor examination (Rule 67.1(iv) PCT) is required for such subject-matter.

2. [ ] Claims Nos.:
because they relate to parts of the international application that do not comply with the prescribed requirements to such an extent that no meaningful international search can be carried out, specifically:

3. [ ] Claims Nos.:
because they are dependent claims and are not drafted in accordance with the second and third sentences of Rule 6.4(a).

Box No. III Observations where unity of invention is lacking (Continuation of item 3 of first sheet)

This International Searching Authority found multiple inventions in this international application, as follows:

1. [ ] As all required additional search fees were timely paid by the applicant, this international search report covers all searchable claims.

2. [ ] As all searchable claims could be searched without effort justifying an additional fees, this Authority did not invite payment of additional fees.

3. [ ] As only some of the required additional search fees were timely paid by the applicant, this international search report covers only those claims for which fees were paid, specifically claims Nos.:

4. [ ] No required additional search fees were timely paid by the applicant. Consequently, this international search report is restricted to the invention first mentioned in the claims; it is covered by claims Nos.:

Remark on Protest

[ ] The additional search fees were accompanied by the applicant's protest and, where applicable, the payment of a protest fee.

[ ] The additional search fees were accompanied by the applicant's protest but the applicable protest fee was not paid within the time limit specified in the invitation.

[ ] No protest accompanied the payment of additional search fees.

Aerin Exhibit 1011, Page 414 of 2183
Aerin Medical Inc. v. Neurent Medical Ltd.
IPR2025-01126

INTERNATIONAL SEARCH REPORT

Information on patent family members

International application No
PCT/IB2021/000243

Patent document cited in search report	Publication date	Patent family member(s)	Publication date
US 2018133460 A1	17-05-2018	AU 2017357869 A1	06-06-2019
		CA 3041440 A1	17-05-2018
		CN 110191674 A	30-08-2019
		EP 3537954 A1	18-09-2019
		JP 2019535386 A	12-12-2019
		US 2018133460 A1	17-05-2018
		US 2020086112 A1	19-03-2020
		US 2020101283 A1	02-04-2020
		US 2020171302 A1	04-06-2020
		WO 2018087601 A1	17-05-2018
WO 2016183337 A2	17-11-2016	AU 2016262085 A1	04-01-2018
		AU 2021200322 A1	18-03-2021
		CA 2984207 A1	17-11-2016
		CN 107835705 A	23-03-2018
		EP 3294410 A2	21-03-2018
		HK 1252823 A1	06-06-2019
		JP 6854015 B2	07-04-2021
		JP 2018515314 A	14-06-2018
		JP 2021087861 A	10-06-2021
		US 2016331459 A1	17-11-2016
		US 2019231429 A1	01-08-2019
		US 2019239953 A1	08-08-2019
		US 2019239954 A1	08-08-2019
		US 2019239955 A1	08-08-2019
		US 2019239956 A1	08-08-2019
		US 2019239957 A1	08-08-2019
		US 2020100838 A1	02-04-2020
		US 2020107882 A1	09-04-2020
		WO 2016183337 A2	17-11-2016

(12) INTERNATIONAL APPLICATION PUBLISHED UNDER THE PATENT COOPERATION TREATY (PCT)

(19) World Intellectual Property Organization
International Bureau

(43) International Publication Date
30 December 2021 (30.12.2021)

WIPO | PCT

(10) International Publication Number
WO 2021/260435 A1

(51) International Patent Classification:
A61B 18/12 (2006.01) *A61N 1/00* (2006.01)
A61B 18/14 (2006.01) *G06N 20/00* (2019.01)
A61B 34/35 (2016.01)

(21) International Application Number:
PCT/IB2021/000441

(22) International Filing Date:
25 June 2021 (25.06.2021)

(25) Filing Language: English

(26) Publication Language: English

(30) Priority Data:
63/044,904 26 June 2020 (26.06.2020) US

(71) Applicant: **NEURENT MEDICAL LIMITED** [IE/IE]; No. 1 Oran Point, Main Street, Oranmore, Galway (IE).

(72) Inventor: **TOWNLEY, David**; Latoon North, Newmarket-on-Fergus, County Clare (IE).

(81) Designated States *(unless otherwise indicated, for every kind of national protection available)*: AE, AG, AL, AM, AO, AT, AU, AZ, BA, BB, BG, BH, BN, BR, BW, BY, BZ, CA, CH, CL, CN, CO, CR, CU, CZ, DE, DJ, DK, DM, DO, DZ, EC, EE, EG, ES, FI, GB, GD, GE, GH, GM, GT, HN, HR, HU, ID, IL, IN, IR, IS, IT, JO, JP, KE, KG, KH, KN, KP, KR, KW, KZ, LA, LC, LK, LR, LS, LU, LY, MA, MD, ME, MG, MK, MN, MW, MX, MY, MZ, NA, NG, NI, NO, NZ, OM, PA, PE, PG, PH, PL, PT, QA, RO, RS, RU, RW, SA, SC, SD, SE, SG, SK, SL, ST, SV, SY, TH, TJ, TM, TN, TR, TT, TZ, UA, UG, US, UZ, VC, VN, WS, ZA, ZM, ZW.

(84) Designated States *(unless otherwise indicated, for every kind of regional protection available)*: ARIPO (BW, GH, GM, KE, LR, LS, MW, MZ, NA, RW, SD, SL, ST, SZ, TZ, UG, ZM, ZW), Eurasian (AM, AZ, BY, KG, KZ, RU, TJ, TM), European (AL, AT, BE, BG, CH, CY, CZ, DE, DK, EE, ES, FI, FR, GB, GR, HR, HU, IE, IS, IT, LT, LU, LV, MC, MK, MT, NL, NO, PL, PT, RO, RS, SE, SI, SK, SM, TR), OAPI (BF, BJ, CF, CG, CI, CM, GA, GN, GQ, GW, KM, ML, MR, NE, SN, TD, TG).

Published:
— *with international search report (Art. 21(3))*
— *before the expiration of the time limit for amending the claims and to be republished in the event of receipt of amendments (Rule 48.2(h))*

(54) **Title:** SYSTEMS AND METHODS FOR TARGETED TISSUE TREATMENT

(57) **Abstract:** The invention generally relates to systems and methods for providing detection, identification, and precision targeting of specific tissue of interest to undergo a therapeutic treatment while minimizing or avoiding collateral damage to surrounding or adjacent non- targeted tissue.

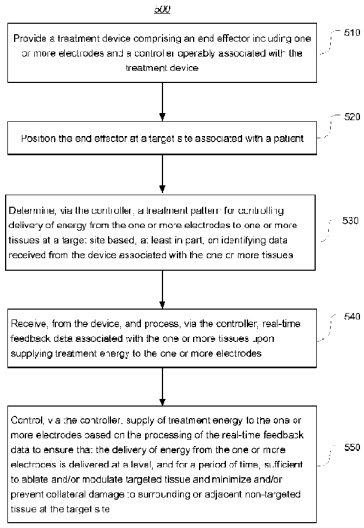

FIG. 10

WO 2021/260435 A1

SYSTEMS AND METHODS FOR TARGETED TISSUE TREATMENT

Cross-reference to Related Applications

This application claims the benefit of, and priority to, U.S. Provisional Patent Application No. 63/044,904, filed June 26, 2020, the contents of which are incorporated by reference.

Field of the Invention

The invention generally relates to systems and methods for providing detection, identification, and precision targeting of specific tissue(s) of interest to undergo a therapeutic treatment while minimizing or avoiding collateral damage to surrounding or adjacent non-targeted tissue.

Background

Certain surgical procedures, such as ablation therapy, require a surgeon to apply precise treatment to the intended target site (i.e., tissue intended to receive treatment) at appropriate levels so as to avoid collateral damage to surrounding tissue, which can lead to further complications and even death. For example, certain procedures require increased precision due to the nature tissue to be treated and the location of such tissue in relation to any nearby or underlying tissue that may be highly sensitive and/or is critical to keep intact and free of unintended damage (i.e., blood vessels, nerves, etc.).

For example, many neuromodulation procedures require such precision. Neuromodulation refers to the alteration, or modulation, of nerve activity by delivering electrical (or sometimes pharmaceutical) agents directly to a target area. The delivery of electrical stimulation can result in partial or complete incapacitation, or other effective disruption, of neural activity. Therapeutic neuromodulation, for example, can include partially or completely inhibiting, reducing, and/or blocking neural communication along neural fibers for the treatment of certain conditions and disorders, specifically for pain relief and/or restoration of function. Some conditions and disorders that may be treated via neuromodulation include, but are not limited to, epilepsy, migraine headaches, spinal cord injuries, Parkinson's disease, and urinary incontinence, to name a few. Neuromodulation can also be used to treat certain conditions associated with the nose, such as rhinosinusitis, including, but not limited to, allergic rhinitis,

Aerin Exhibit 1011, Page 417 of 2183
Aerin Medical Inc. v. Neurent Medical Ltd.
IPR2025-01126

non-allergic rhinitis, chronic rhinitis, acute rhinitis, recurrent rhinitis, chronic sinusitis, acute sinusitis, recurrent sinusitis, and medical resistant rhinitis and/or sinusitis, in addition to combinations of one or more of the preceding conditions.

Neuromodulation treatment procedures may generally involve the application of electrodes to the brain, the spinal cord, or peripheral nerves for subsequent treatment of conditions or disorders associated therewith. The electrodes are coupled, via an extension cable, to a pulse generator and power source, which generates the necessary electrical stimulation. An electrical current passes from the generator to the nerve, and can either inhibit pain signals or stimulate neural impulses where they were previously absent. Importantly, electrodes must be precisely placed and the level of electrical stimulation must be controlled so as to avoid or minimize creating collateral damage to surrounding or adjacent non-neural structures, such as bone and blood vessels, as well as non-targeted neural tissue.

Peripheral nerve stimulation is a commonly used approach to treat peripheral neurological conditions and conditions, including chronic pain. In order to establish accurate placement of electrodes and level of electrical stimulation to the targeted peripheral nerve, peripheral nerve stimulation treatment typically requires an initial testing or trial period. For example, a small electrical device (a wire-like electrode) is surgically implanted and placed next to one of the peripheral nerves. The electrode delivers rapid electrical pulses during the initial testing period (trial) to determine whether the electrical pulses result in the desired effect. Once the desired effect is established (via repositioning and/or adjusting of electrical stimulation levels) a more permanent electrode may be implanted into a patient's body. Accordingly, a drawback to current neuromodulation procedures, notably neuromodulation of peripheral nerves, is that such procedures cannot precisely target neural tissue, thereby presenting risk of causing significant collateral damage to surrounding non-neural tissue (such as blood vessels), and/or other non-targeted neural tissue.

Another exemplary procedure requiring precision includes interventional cardiac electrophysiology (EP) procedures, for example. In such a procedure, it is often necessary for the surgeon to determine the condition of cardiac tissue at a target ablation site in or near the heart. During some EP procedures, the surgeon may deliver a mapping catheter through a main vein or artery into an interior region of the heart to be treated. Using the mapping catheter, the surgeon may then determine the source of a cardiac rhythm disturbance or abnormality by

Aerin Exhibit 1011, Page 418 of 2183
Aerin Medical Inc. v. Neurent Medical Ltd.
IPR2025-01126

placing a number of mapping elements carried by the catheter into contact with the adjacent cardiac tissue and then operating the catheter to generate an electrophysiology map of the interior region of the heart based on sensed electrical cardiac signals. Once a map of the heart is generated, the surgeon may then advance an ablation catheter into the heart, and position an ablation electrode carried by the catheter tip near the targeted cardiac tissue to ablate the tissue and form a lesion, thereby treating the cardiac rhythm disturbance or abnormality. In some techniques, the ablation catheter itself may include a number of mapping electrodes, allowing the same device to be used for both mapping and ablation.

Various ultrasound-based imaging catheters and probes have been developed for visualizing body tissue in applications such as interventional cardiology, interventional radiology, and electrophysiology. For interventional cardiac electrophysiology procedures, for example, ultrasound imaging devices have been developed that permit the visualization of anatomical structures of the heart directly and in real-time. While such imaging-based products allow some form of visualization of the targeted tissue, such procedures still lack the ability to precisely target and apply treatment to the tissue of interest while reducing or eliminating the risk of further treatment non-targeted, adjacent tissue.

Summary

The invention recognizes that knowing certain properties of tissue, both active and passive, at a given target site prior to and during electrotherapeutic treatment (i.e., neuromodulation, ablation, etc.) provides an ability to more precisely target a specific tissue of interest (i.e., targeted tissue) and minimize and/or prevent collateral damage to adjacent or surrounding non-targeted tissue.

For example, certain target sites intended to undergo treatment may consist of more than one type of tissue (i.e., nerves, muscles, bone, blood vessels, etc.). In particular, a tissue of interest (i.e., the specific tissue to undergo treatment) may be adjacent to one or more tissues that are not of interest (i.e., tissue that is not intended to undergo treatment). In one scenario, a surgeon may wish to provide electrotherapeutic stimulation to a nerve tissue, while avoiding providing any such stimulation to an adjacent blood vessel, for example, as unintended collateral damage may result in damage to the blood vessel and cause further complications. In such a scenario, the specific type of targeted tissue may generally dictate the level of electrical

Aerin Exhibit 1011, Page 419 of 2183
Aerin Medical Inc. v. Neurent Medical Ltd.
IPR2025-01126

stimulation required to elicit a desired effect. Furthermore, physical properties of the targeted tissue, including the specific location and depth of the targeted tissue, in relation to the non-targeted tissue, further impacts the level of electrical stimulation necessary to result in effective therapeutic treatment.

The invention provides systems and methods with an ability to characterize, prior to an electrotherapeutic treatment, the type of tissue at a target site by sensing at least bioelectric properties of tissue, wherein such characterization includes identifying specific types of tissue present at the target site. For example, different tissue types include different physiological and histological characteristics. As a result of the different characteristics, different tissue types have different associated bioelectrical properties and thus exhibit different behavior in response to application of energy applied thereto.

By knowing such properties of a given tissue, the systems and methods are configured to determine a specific treatment pattern for controlling delivery of energy at a specific level for a specific period of time to the tissue of interest (i.e., the targeted tissue) sufficient to ensure successful ablation/modulation of the targeted tissue while minimizing and/or preventing collateral damage to surrounding or adjacent non-targeted tissue at the target site. In particular, a given treatment pattern may include, for example, a predetermined treatment time, a precise level of energy to be delivered, and a predetermined impedance threshold for that particular tissue.

The systems and methods are further configured to receive and process real-time feedback data associated with the targeted tissue undergoing treatment to further ensure that energy delivered is maintained within the scope of the treatment pattern. More specifically, the systems and methods are configured to automatically control delivery of energy to the targeted tissue based on the processing of the real-time feedback data, wherein such data includes at least impedance measurement data associated with the targeted tissue collected during delivery of energy to the targeted tissue. The controller is configured to process impedance measurement data to detect a slope change event (e.g., an asymptotic rise) within an impedance profile associated with the treatment, wherein, with reference to the predetermined impedance threshold, the slope change event is indicative of whether the ablation/modulation of the targeted tissue is successful. In turn, the controller is configured to automatically control the delivery of energy to the targeted tissue based on real-time monitoring of feedback data, most notably impedance data, to ensure the desired ablation/modulation is achieved.

Aerin Exhibit 1011, Page 420 of 2183
Aerin Medical Inc. v. Neurent Medical Ltd.
IPR2025-01126

As a result, the systems and methods are able to ensure that optimal energy is delivered in order to delay the onset of impedance roll-off, until the target ablation/modulation depth is achieved, while maintaining clinically relevant treatment time. Accordingly, the invention solves the problem of causing unnecessary collateral damage to non-targeted tissue during a procedure involving the application of electrotherapeutic stimulation at a target site composed of a variety of tissue types.

One aspect of the present invention provides a system for treating a condition. The system includes a treatment device including an end effector comprising one or more electrodes and a controller operably associated with the treatment device. The controller is configured to determine a treatment pattern for controlling delivery of energy from the one or more electrodes to one or more tissues at a target site based, at least in part, on identifying data received from the device associated with the one or more tissues. The controller is further configured to receive and process real-time feedback data associated with the one or more tissues upon supplying treatment energy to the one or more electrodes. The controller is configured to then control supply of treatment energy to the one or more electrodes based on the processing of the real-time feedback data to ensure that the delivery of energy from the one or more electrodes is delivered at a level, and for a period of time, sufficient to ablate and/or modulate targeted tissue and minimize and/or prevent collateral damage to surrounding or adjacent non-targeted tissue at the target site.

The identifying data is associated with one or more properties of the one or more tissues, wherein the one or more properties may include, but are not limited to, a type of tissue, a depth of the one or more tissues, and a location of the one or more tissues. For example, a subset of the one or more electrodes may be configured to deliver non-therapeutic stimulating energy at a frequency/waveform to respective positions at the target site to thereby sense at least bioelectric properties of the one or more tissues at the target site. The bioelectric properties may include, but are not limited to, complex impedance, resistance, reactance, capacitance, inductance, permittivity, conductivity, dielectric properties, muscle or nerve firing voltage, muscle or nerve firing current, depolarization, hyperpolarization, magnetic field, and induced electromotive force.

The controller is configured to process the identifying data to determine the treatment pattern. The processing of identifying data, via the controller, may include, for example comparing the identifying data received from the device with electric signature data associated

Aerin Exhibit 1011, Page 421 of 2183
Aerin Medical Inc. v. Neurent Medical Ltd.
IPR2025-01126

with a plurality of known tissue types. The electric signature data, for example, may include at least bioelectric properties of known tissue types. The comparison may include correlating the identifying data received from the device with electric signature data from a supervised and/or an unsupervised trained neural network.

The treatment pattern may include, for example, a predetermined treatment time, a level of energy to be delivered from the electrodes, and a predetermined impedance threshold. Accordingly, the feedback data may include at least impedance measurement data associated with the targeted tissue at the target site. The controller may be configured to process the impedance measurement data to calculate an active impedance value during delivery of energy from the one or more electrodes to the targeted tissue. In particular, the controller may be configured to process the active impedance value using an algorithm to determine efficacy of ablation/modulation of the targeted tissue based on a comparison of the active impedance value with at least one of a predetermined minimum impedance value, a predetermined low terminal impedance value, and a predetermined high terminal impedance value. In the event that the active impedance value is less than the predetermined minimum impedance value, the controller is configured to determine that ablation/modulation is unsuccessful and then further disables energy delivery from the one or more electrodes. In the event that the active impedance value is greater than the predetermined minimum impedance value and greater than the predetermined low terminal impedance value, the controller is configured to calculate a slope change for the detection of a slope event. If a negative slope event is detected, the controller is configured to determine that ablation/modulation is successful and the controller disables energy delivery from the one or more electrodes upon detecting a negative slope event. If a negative slope event is not detected, the controller determines that ablation/modulation is unsuccessful and disables energy delivery from the one or more electrodes. In the absence of detecting a slope event, the controller is configured to determine that ablation/modulation is unsuccessful if the active impedance value is greater than the predetermined high terminal impedance value and the controller further disables energy delivery from the one or more electrodes.

The controller is further configured to transmit a signal resulting in an output, via an interactive interface, of an alert to a user indicating a status of the efficacy of ablation/modulation of the targeted tissue. The alert may include, for example, a visual alert including at least one of a color and text displayed on a graphical user interface (GUI) and

Aerin Exhibit 1011, Page 422 of 2183
Aerin Medical Inc. v. Neurent Medical Ltd.
IPR2025-01126

indicating whether the ablation/modulation is successful or unsuccessful.

In some embodiments, the condition includes a peripheral neurological condition. The peripheral neurological condition may be associated with a nasal condition or a non-nasal condition of the patient. For example, the non-nasal condition may include atrial fibrillation (AF). In some embodiments, the nasal condition may include rhinosinusitis. Accordingly, in some embodiments, the target site is within a sino-nasal cavity of the patient. The delivery of the ablation energy may result in disruption of multiple neural signals to, and/or result in local hypoxia of, mucus producing and/or mucosal engorgement elements within the sino-nasal cavity of the patient. The targeted tissue is proximate or inferior to a sphenopalatine foramen. Yet still, delivery of the ablation energy may result in therapeutic modulation of postganglionic parasympathetic nerves innervating nasal mucosa at foramina and or microforamina of a palatine bone of the patient. In particular, delivery of the ablation energy causes multiple points of interruption of neural branches extending through foramina and microforamina of palatine bone. Yet still, in some embodiments, delivery of the ablation energy may cause thrombus formation within one or more blood vessels associated with mucus producing and/or mucosal engorgement elements within the nose. The resulting local hypoxia of the mucus producing and/or mucosal engorgement elements may result in decreased mucosal engorgement to thereby increase volumetric flow through a nasal passage of the patient. Additionally, or alternatively, the resulting local hypoxia may cause neuronal degeneration.

Another aspect of the invention provides a method for treating a condition. The method includes providing a treatment device comprising an end effector including one or more electrodes and a controller operably associated with the treatment device and positioning the end effector at a target site associated with a patient. The method further includes determining, via the controller, a treatment pattern for controlling delivery of energy from the one or more electrodes to one or more tissues at a target site based, at least in part, on identifying data received from the device associated with the one or more tissues. The method further includes receiving, from the device, and processing, via the controller, real-time feedback data associated with the one or more tissues upon supplying treatment energy to the one or more electrodes. The method further includes controlling, via the controller, supply of treatment energy to the one or more electrodes based on the processing of the real-time feedback data to ensure that the delivery of energy from the one or more electrodes is delivered at a level, and for a period of time,

Aerin Exhibit 1011, Page 423 of 2183
Aerin Medical Inc. v. Neurent Medical Ltd.
IPR2025-01126

sufficient to ablate and/or modulate targeted tissue and minimize and/or prevent collateral damage to surrounding or adjacent non-targeted tissue at the target site.

The identifying data is associated with one or more properties of the one or more tissues, wherein the one or more properties may include, but are not limited to, a type of tissue, a depth of the one or more tissues, and a location of the one or more tissues. For example, a subset of the one or more electrodes may be configured to deliver non-therapeutic stimulating energy at a frequency/waveform to respective positions at the target site to thereby sense at least bioelectric properties of the one or more tissues at the target site. The bioelectric properties may include, but are not limited to, complex impedance, resistance, reactance, capacitance, inductance, permittivity, conductivity, dielectric properties, muscle or nerve firing voltage, muscle or nerve firing current, depolarization, hyperpolarization, magnetic field, and induced electromotive force.

The controller is configured to process the identifying data to determine the treatment pattern. The processing of identifying data, via the controller, may include, for example comparing the identifying data received from the device with electric signature data associated with a plurality of known tissue types. The electric signature data, for example, may include at least bioelectric properties of known tissue types. The comparison may include correlating the identifying data received from the device with electric signature data from a supervised and/or an unsupervised trained neural network.

The treatment pattern may include, for example, a predetermined treatment time, a level of energy to be delivered from the electrodes, and a predetermined impedance threshold. Accordingly, the feedback data may include at least impedance measurement data associated with the targeted tissue at the target site. The controller may be configured to process the impedance measurement data to calculate an active impedance value during delivery of energy from the one or more electrodes to the targeted tissue. In particular, the controller may be configured to process the active impedance value using an algorithm to determine efficacy of ablation/modulation of the targeted tissue based on a comparison of the active impedance value with at least one of a predetermined minimum impedance value, a predetermined low terminal impedance value, and a predetermined high terminal impedance value. In the event that the active impedance value is less than the predetermined minimum impedance value, the controller is configured to determine that ablation/modulation is unsuccessful and then further disables energy delivery from the one or more electrodes. In the event that the active impedance value is

Aerin Exhibit 1011, Page 424 of 2183
Aerin Medical Inc. v. Neurent Medical Ltd.
IPR2025-01126

greater than the predetermined minimum impedance value and greater than the predetermined low terminal impedance value, the controller is configured to calculate a slope change for the detection of a slope event. If a negative slope event is detected, the controller is configured to determine that ablation/modulation is successful and the controller disables energy delivery from the one or more electrodes upon detecting a negative slope event. If a negative slope event is not detected, the controller determines that ablation/modulation is unsuccessful and disables energy delivery from the one or more electrodes. In the absence of detecting a slope event, the controller is configured to determine that ablation/modulation is unsuccessful if the active impedance value is greater than the predetermined high terminal impedance value and the controller further disables energy delivery from the one or more electrodes.

The controller is further configured to transmit a signal resulting in an output, via an interactive interface, of an alert to a user indicating a status of the efficacy of ablation/modulation of the targeted tissue. The alert may include, for example, a visual alert including at least one of a color and text displayed on a graphical user interface (GUI) and indicating whether the ablation/modulation is successful or unsuccessful.

In some embodiments, the condition includes a peripheral neurological condition. The peripheral neurological condition may be associated with a nasal condition or a non-nasal condition of the patient. For example, the non-nasal condition may include atrial fibrillation (AF). In some embodiments, the nasal condition may include rhinosinusitis. Accordingly, in some embodiments, the target site is within a sino-nasal cavity of the patient. The delivery of the ablation energy may result in disruption of multiple neural signals to, and/or result in local hypoxia of, mucus producing and/or mucosal engorgement elements within the sino-nasal cavity of the patient. The targeted tissue is proximate or inferior to a sphenopalatine foramen. Yet still, delivery of the ablation energy may result in therapeutic modulation of postganglionic parasympathetic nerves innervating nasal mucosa at foramina and or microforamina of a palatine bone of the patient. In particular, delivery of the ablation energy causes multiple points of interruption of neural branches extending through foramina and microforamina of palatine bone. Yet still, in some embodiments, delivery of the ablation energy may cause thrombus formation within one or more blood vessels associated with mucus producing and/or mucosal engorgement elements within the nose. The resulting local hypoxia of the mucus producing and/or mucosal engorgement elements may result in decreased mucosal engorgement to thereby increase

Aerin Exhibit 1011, Page 425 of 2183
Aerin Medical Inc. v. Neurent Medical Ltd.
IPR2025-01126

volumetric flow through a nasal passage of the patient. Additionally, or alternatively, the resulting local hypoxia may cause neuronal degeneration.

Brief Description of the Drawings

FIGS. 1A and 1B are diagrammatic illustrations of a system for treating a condition of a patient using a handheld device according to some embodiments of the present disclosure.

FIG. 2 is a diagrammatic illustration of the console coupled to the handheld device consistent with the present disclosure, further illustrating one embodiment of an end effector of the handheld device for delivering energy to tissue at one or more target sites.

FIG. 3 is a side view of one embodiment of a handheld device for providing therapeutic treatment consistent with the present disclosure.

FIG. 4 is an enlarged, perspective view of one embodiment of an end effector consistent with the present disclosure.

FIGS. 5A-5F are various views of the multi-segment end effector consistent with the present disclosure.

FIG. 5A is an enlarged, perspective view of the multi-segment end effector illustrating the first (proximal) segment and second (distal) segment. FIG. 5B is an exploded, perspective view of the multi-segment end effector. FIG. 5C is an enlarged, top view of the multi-segment end effector. FIG. 5D is an enlarged, side view of the multi-segment end effector. FIG. 5E is an enlarged, front (proximal facing) view of the first (proximal) segment of the multi-segment end effector. FIG. 5F is an enlarged, front (proximal facing) view of the second (distal) segment of the multi-segment end effector.

FIG. 6 is a perspective view, partly in section, of a portion of a support element illustrating an exposed conductive wire serving as an energy delivery element or electrode element.

FIG. 7 is a cross-sectional view of a portion of the shaft of the handheld device taken along lines 7-7 of FIG. 3.

FIG. 8A is a side view of the handle of the handheld device.

FIG. 8B is a side view of the handle illustrating internal components enclosed within.

Aerin Exhibit 1011, Page 426 of 2183
Aerin Medical Inc. v. Neurent Medical Ltd.
IPR2025-01126

FIG. 9A is a block diagram illustrating delivery of non-therapeutic energy from electrodes of the end effector at a frequency/waveform for sensing one or more properties associated with one or more tissues at a target site in response to the non-therapeutic energy.

FIG. 9B is a block diagram illustrating communication of sensor data from the handheld device to the controller and subsequent determination, via the controller, of a treatment pattern for controlling energy delivery based on the sensor data for precision targeting of tissue of interest and to be treated.

FIG. 9C is a block diagram illustrating delivery of energy to the target site based on the treatment pattern output from the controller, monitoring of real-time feedback data associated with the targeted tissue undergoing treatment, and subsequent control over the delivery of energy based on the processing of the feedback data.

FIG. 10 is a flow diagram illustrating one embodiment of a method for treating a condition.

FIGS. 11A and 11B are graphs illustrating impedance profiles of two different sets of electrodes delivering energy to respective portions of targeted tissue, wherein the graphs illustrate a slope change event (e.g., asymptotic rise) which is indicative of whether the ablation/modulation of the targeted tissue is successful.

FIG. 12A illustrates an exemplary embodiment of a handheld device with fully deployed end effector, including an RF generator with a GUI, consistent with the present disclosure.

FIG. 12B illustrates placement of a two stage end effector around the turbinates and in close proximity to the primary and accessory posterior nasal nerves.

FIG. 12C is a close up view of the leaflets of the two-stage end effector indicating ground and active electrode pairs shown with black and red colors, respectively.

FIG. 12D is a simplified model used for computational modeling and showing the electrode inter-pair (IP) spacing and electrode length (EL).

FIG. 12E is an experimental setup using liver tissue with one activated petal pointed by white arrow.

FIGS. 13A and 13B illustrate simulated ablation zones (black contour) of tissue depth and tissue surface, respectively, following RF ablation with different electrode lengths while maintaining the same power level.

Aerin Exhibit 1011, Page 427 of 2183
Aerin Medical Inc. v. Neurent Medical Ltd.
IPR2025-01126

FIG. 13C is a graph illustrating transient impedance profiles for different electrode lengths.

FIG. 13D is a graph illustrating a computationally estimated ablation depth expressed as a percentage increase in depth with increase in EL.

FIGS. 14A and 14B illustrate simulated ablation zones (black contour) of tissue depth and tissue surface, respectively following RF ablation with different electrode lengths while maintaining same power level for all three models with different inter-IP spacing.

FIG. 14C is a graph illustrating transient impedance profiles for different IP spacing.

FIG. 14D is a graph illustrating a computationally estimated ablation depth expressed as a percentage increase in depth with increase in IP spacing.

FIGS. 15A and 15B illustrate simulated ablation zones (black contour) of tissue depth and tissue surface, respectively following RF ablation with two configurations for a base (short EL and IP spacing) and optimized (large EL and IP) at the same power level.

FIG. 15C is a graph illustrating transient impedance profiles for two configurations.

FIG. 15D is a graph illustrating a computationally estimated ablation depth expressed as a percentage increase in depth with respect to base configuration.

FIGS. 16A and 16B are graphs illustrating transient impedance profiles during RF ablation in ex vivo liver tissue, specifically showing experimentally measured impedance during ex vivo experiments (n=3) with triangular blue markers with an interval of 2 s while the simulated impedance from computational model is demonstrated by dashed black line.

FIG. 16C is a photo of showing ablation zones following RF ablation in ex vivo liver tissue.

FIG. 16D is a graph illustrating experimentally measured and computationally estimated ablation depths expressed as a percentage change relative to that of respective low-medium power level.

FIG. 17 shows a chart illustrating the impact of energy delivery strategy on ablation results, specifically showing simulation results following different energy delivery strategies including constant and duty cycle energy deliveries, including temperature maps of tissue depth are shown immediately following the treatment (after impedance role-off) for each heating protocol with contours of thermal damage.

Aerin Exhibit 1011, Page 428 of 2183
Aerin Medical Inc. v. Neurent Medical Ltd.
IPR2025-01126

FIG. 18A is a graph illustrating transient impedance profiles for models with different blood perfusion rates while the power level was fixed for all models (P = 1 W). The black triangular markers and blue circular markers display the data related to model with high and low perfusion effects respectively, while the model with no perfusion effects is shown by red color, while the dashed black contours in temperature distribution maps represent the thermal damage. FIGS. 18B-18D illustrate ablation zones (black contour) of tissue depth and tissue surface, respectively following RF ablation.

Detailed Description

The invention recognizes that knowing certain properties of tissue, both active and passive, at a given target site prior to and during electrotherapeutic treatment (i.e., neuromodulation, ablation, etc.) provides an ability to more precisely target a specific tissue of interest (i.e., targeted tissue) and minimize and/or prevent collateral damage to adjacent or surrounding non-targeted tissue.

For example, certain target sites intended to undergo treatment may consist of more than one type of tissue (i.e., nerves, muscles, bone, blood vessels, etc.). In particular, a tissue of interest (i.e., the specific tissue to undergo treatment) may be adjacent to one or more tissues that are not of interest (i.e., tissue that is not intended to undergo treatment). In one scenario, a surgeon may wish to provide electrotherapeutic stimulation to a nerve tissue, while avoiding providing any such stimulation to an adjacent blood vessel, for example, as unintended collateral damage may result in damage to the blood vessel and cause further complications. In such a scenario, the specific type of targeted tissue may generally dictate the level of electrical stimulation required to elicit a desired effect. Furthermore, physical properties of the targeted tissue, including the specific location and depth of the targeted tissue, in relation to the non-targeted tissue, further impacts the level of electrical stimulation necessary to result in effective therapeutic treatment.

Neuromodulation, for example, is technology that acts directly upon nerves. It is the alteration, or modulation, of nerve activity by delivering electrical or pharmaceutical agents directly to a target area. Neuromodulation devices and treatments have been shown to be highly effective at treating a variety of conditions and disorders. The most common indication for neuromodulation is treatment of chronic pain. However, the number of neuromodulation

Aerin Exhibit 1011, Page 429 of 2183
Aerin Medical Inc. v. Neurent Medical Ltd.
IPR2025-01126

applications over the years has increased to include more than just the treatment of chronic pain, such as deep brain stimulation (DBS) treatment for Parkinson's disease, sacral nerve stimulation for pelvic disorders and incontinence, and spinal cord stimulation for ischemic disorders (angina, peripheral vascular disease).

Neuromodulation is particularly useful in the treatment of peripheral neurological disorders. There are currently over 100 kinds of peripheral nerve disorders, which can affect one nerve or many nerves. Some are the result of other diseases, like diabetic nerve problems. Others, like Guillain-Barre syndrome, happen after a virus infection. Still others are from nerve compression, like carpal tunnel syndrome or thoracic outlet syndrome. In some cases, like complex regional pain syndrome and brachial plexus injuries, the problem begins after an injury. However, some people are born with peripheral neurological disorders.

Peripheral nerve stimulation has become established for very specific clinical indications, including certain complex regional pain syndromes, pain due to peripheral nerve injuries, and the like. Some of the common applications of peripheral nerve stimulation include treatment of back pain, occipital nerve stimulation for treatment of migraine headaches, and pudendal nerve stimulation that is being investigated for use in urinary bladder incontinence.

The invention provides systems and methods with an ability to characterize, prior to an electrotherapeutic treatment, the type of tissue at a target site by sensing at least bioelectric properties of tissue, wherein such characterization includes identifying specific types of tissue present. For example, different tissue types include different physiological and histological characteristics. As a result of the different characteristics, different tissue types have different associated bioelectrical properties and thus exhibit different behavior in response to application of energy and frequencies applied thereto.

By knowing such properties of a given tissue, the systems and methods are configured to determine a specific treatment pattern for controlling delivery of energy at a specific level for a specific period of time to the tissue of interest (i.e., the targeted tissue) sufficient to ensure successful ablation/modulation of the targeted tissue while minimizing and/or preventing collateral damage to surrounding or adjacent non-targeted tissue at the target site. In particular, a given treatment pattern may include, for example, a predetermined treatment time, a precise level of energy to be delivered, and a predetermined impedance threshold for that particular tissue.

The systems and methods are further configured to receive and process real-time

Aerin Exhibit 1011, Page 430 of 2183
Aerin Medical Inc. v. Neurent Medical Ltd.
IPR2025-01126

feedback data associated with the targeted tissue undergoing treatment to further ensure that energy delivered is maintained within the scope of the treatment pattern. More specifically, the systems and methods are configured to automatically control delivery of energy to the targeted tissue based on the processing of the real-time feedback data, wherein such data includes at least impedance measurement data associated with the targeted tissue collected during delivery of energy to the targeted tissue. The controller is configured to process impedance measurement data to detect a slope change event (e.g., an asymptotic rise) within an impedance profile associated with the treatment, wherein, with reference to the predetermined impedance threshold, the slope change event is indicative of whether the ablation/modulation of the targeted tissue is successful. In turn, the controller is configured to automatically control the delivery of energy to the targeted tissue based on real-time monitoring of feedback data, most notably impedance data, to ensure the desired ablation/modulation is achieved.

As a result, the systems and methods are able to ensure that optimal energy is delivered in order to delay the onset of impedance roll-off, until the target ablation/modulation depth is achieved, while maintaining clinically relevant treatment time. Accordingly, the invention solves the problem of causing unnecessary collateral damage to non-targeted tissue during a procedure involving the application of electrotherapeutic stimulation at a target site composed of a variety of tissue types.

It should be noted that, although many of the embodiments are described with respect to devices, systems, and methods for therapeutically modulating nerves associated with the peripheral nervous system (PNS) and thus the treatment of peripheral neurological conditions or disorders, other applications and other embodiments in addition to those described herein are within the scope of the present disclosure. For example, at least some embodiments of the present disclosure may be useful for the treatment of other disorders, such as the treatment of disorders associated with the central nervous system.

FIGS. 1A and 1B are diagrammatic illustrations of a therapeutic system 100 for treating a condition of a patient using a handheld device 102 according to some embodiments of the present disclosure. The system 100 generally includes a device 102 and a console 104 to which the device 102 is to be connected. FIG. 2 is a diagrammatic illustrations of the console 104 coupled to the handheld device 102 illustrating an exemplary embodiment of an end effector 114 for delivering energy to tissue at the one or more target sites of a patient for the treatment of a

Aerin Exhibit 1011, Page 431 of 2183
Aerin Medical Inc. v. Neurent Medical Ltd.
IPR2025-01126

neurological disorder. As illustrated, the device 102 is a handheld device, which includes end effector 114, a shaft 116 operably associated with the end effector 114, and a handle 118 operably associated with the shaft 116. The end effector 114 may be collapsible/retractable and expandable, thereby allowing for the end effector 114 to be minimally invasive (i.e., in a collapsed or retracted state) upon delivery to one or more target sites within a patient and then expanded once positioned at the target site. It should be noted that the terms "end effector" and "therapeutic assembly" may be used interchangeably throughout this disclosure.

For example, a surgeon or other medical professional performing a procedure can utilize the handle 118 to manipulate and advance the shaft 116 to a desired target site, wherein the shaft 116 is configured to locate at least a distal portion thereof intraluminally at a treatment or target site within a portion of the patient associated with tissue to undergo electrotherapeutic stimulation for subsequent treatment of an associated condition or disorder. In the event that the tissue to be treated is a nerve, such that electrotherapeutic stimulation thereof results in treatment of an associated neurological condition, the target site may generally be associated with peripheral nerve fibers. The target site may be a region, volume, or area in which the target nerves are located and may differ in size and shape depending upon the anatomy of the patient. Once positioned, the end effector 114 may be deployed and subsequently deliver energy to the one or more target sites. The energy delivered may be non-therapeutic stimulating energy at a frequency for locating neural tissue and further sensing one or more properties of the neural tissue. For example, the end effector 114 may include an electrode array, which includes at least a subset of electrodes configured to sense the presence of neural tissue at a respective position of each of the electrodes, as well as morphology of the neural tissue, wherein such data may be used for determining, via the console 104, the type of neural tissue, depth of neural tissue, and location of neural tissue.

Based on the identification of the neural tissue type, the console 104 is configured to determine a specific treatment pattern for controlling delivery of energy from the end effector 114 upon the target site at a specific level for a specific period of time to the tissue of interest (i.e., the targeted tissue) sufficient to ensure successful ablation/modulation of the targeted tissue while minimizing and/or preventing collateral damage to surrounding or adjacent non-targeted tissue at the target site. Accordingly, the end effector 114 is able to therapeutically modulating nerves of interest, particularly nerves associated with a peripheral neurological conditional or

Aerin Exhibit 1011, Page 432 of 2183
Aerin Medical Inc. v. Neurent Medical Ltd.
IPR2025-01126

disorder so as to treat such condition or disorder, while minimizing and/or preventing collateral damage.

For example, the end effector 114 may include at least one energy delivery element, such as an electrode, configured to delivery energy to the target tissue which may be used for sensing presence and/or specific properties of tissue (such tissue including, but not limited to, muscle, nerves, blood vessels, bones, etc.) for therapeutically modulating tissues of interest, such as neural tissue. For example, one or more electrodes may be provided by one or more portions of the end effector 114, wherein the electrodes may be configured to apply electromagnetic neuromodulation energy (e.g., radiofrequency (RF) energy) to target sites. In other embodiments, the end effector 114 may include other energy delivery elements configured to provide therapeutic neuromodulation using various other modalities, such as cryotherapeutic cooling, ultrasound energy (e.g., high intensity focused ultrasound ("HIFU") energy), microwave energy (e.g., via a microwave antenna), direct heating, high and/or low power laser energy, mechanical vibration, and/or optical power.

In some embodiments, the end effector 114 may include one or more sensors (not shown), such as one or more temperature sensors (e.g., thermocouples, thermistors, etc.), impedance sensors, and/or other sensors. The sensors and/or the electrodes may be connected to one or more wires extending through the shaft 116 and configured to transmit signals to and from the sensors and/or convey energy to the electrodes.

As shown, the device 102 is operatively coupled to the console 104 via a wired connection, such as cable 120. It should be noted, however, that the device 102 and console 104 may be operatively coupled to one another via a wireless connection. The console 104 is configured to provide various functions for the device 102, which may include, but is not limited to, controlling, monitoring, supplying, and/or otherwise supporting operation of the device 102. For example, when the device 102 is configured for electrode-based, heat-element-based, and/or transducer-based treatment, the console 104 may include an energy generator 106 configured to generate RF energy (e.g., monopolar, bipolar, or multi-polar RF energy), pulsed electrical energy, microwave energy, optical energy, ultrasound energy (e.g., intraluminally-delivered ultrasound and/or HIFU), direct heat energy, radiation (e.g., infrared, visible, and/or gamma radiation), and/or another suitable type of energy.

In some embodiments, the console 104 may include a controller 107 communicatively

Aerin Exhibit 1011, Page 433 of 2183
Aerin Medical Inc. v. Neurent Medical Ltd.
IPR2025-01126

coupled to the device 102. However, in the embodiments described herein, the controller 107 may generally be carried by and provided within the handle 118 of the device 102. The controller 107 is configured to initiate, terminate, and/or adjust operation of one or more electrodes provided by the end effector 114 directly and/or via the console 104. For example, the controller 107 can be configured to execute an automated control algorithm and/or to receive control instructions from an operator (e.g., surgeon or other medical professional or clinician). For example, the controller 107 and/or other components of the console 104 (e.g., processors, memory, etc.) can include a computer-readable medium carrying instructions, which when executed by the controller 107, causes the device 102 to perform certain functions (e.g., apply energy in a specific manner, detect impedance, detect temperature, detect nerve locations or anatomical structures, etc.). A memory includes one or more of various hardware devices for volatile and non-volatile storage, and can include both read-only and writable memory. For example, a memory can comprise random access memory (RAM), CPU registers, read-only memory (ROM), and writable non-volatile memory, such as flash memory, hard drives, floppy disks, CDs, DVDs, magnetic storage devices, tape drives, device buffers, and so forth. A memory is not a propagating signal divorced from underlying hardware; a memory is thus non-transitory.

The console 104 may further be configured to provide feedback to an operator before, during, and/or after a treatment procedure via evaluation/feedback algorithms 110. For example, the evaluation/feedback algorithms 110 can be configured to provide information associated with the location of nerves at the treatment site, the temperature of the tissue at the treatment site, and/or the effect of the therapeutic neuromodulation on the nerves at the treatment site. In certain embodiments, the evaluation/feedback algorithm 110 can include features to confirm efficacy of the treatment and/or enhance the desired performance of the system 100. For example, the evaluation/feedback algorithm 110, in conjunction with the controller 107, can be configured to monitor temperature at the treatment site during therapy and automatically shut off the energy delivery when the temperature reaches a predetermined maximum (e.g., when applying RF energy) or predetermined minimum (e.g., when applying cryotherapy). In other embodiments, the evaluation/feedback algorithm 110, in conjunction with the controller 107, can be configured to automatically terminate treatment after a predetermined maximum time, a predetermined maximum impedance rise of the targeted tissue (i.e., in comparison to a baseline

Aerin Exhibit 1011, Page 434 of 2183
Aerin Medical Inc. v. Neurent Medical Ltd.
IPR2025-01126

impedance measurement), a predetermined maximum impedance of the targeted tissue), and/or other threshold values for biomarkers associated with autonomic function. This and other information associated with the operation of the system 100 can be communicated to the operator via a graphical user interface (GUI) 112 provided via a display on the console 104 and/or a separate display (not shown) communicatively coupled to the console 104, such as a tablet or monitor. The GUI 112 may generally provide operational instructions for the procedure, such as indicating when the device 102 is primed and ready to perform the treatment, and further providing status of therapy during the procedure, including indicating when the treatment is complete.

For example, as previously described, the end effector 114 and/or other portions of the system 100 can be configured to detect various parameters of a tissue of interest at the target site to determine the anatomy at the target site (e.g., tissue types, tissue locations, vasculature, bone structures, foramen, sinuses, etc.), locate nerves and/or other structures, and allow for neural mapping. For example, the end effector 114 may be configured to detect impedance, dielectric properties, temperature, and/or other properties that indicate the presence of neural tissue or fibers in the target region, as described in greater detail herein.

As shown in FIG. 1A, the console 104 further includes a monitoring system 108 configured to receive data from the end effector 114 (i.e., detected electrical and/or thermal measurements of tissue at the target site), specifically sensed by appropriate sensors (e.g., temperature sensors and/or impedance sensors, or the like), and process this information to identify the presence of nerves, the location of nerves, neural activity at *the* target site, and/or other properties of the neural tissue, such a physiological properties (e.g., depth), bioelectric properties, and thermal properties. The nerve monitoring system 108 can be operably coupled to the electrodes and/or other features of the end effector 114 via signal wires (e.g., copper wires) that extend through the cable 120 and through the length of the shaft 116. In other embodiments, the end effector 114 can be communicatively coupled to the nerve monitoring system 108 using other suitable communication means.

The nerve monitoring system 108 can determine neural locations and activity before therapeutic neuromodulation to determine precise treatment regions corresponding to the positions of the desired nerves. The nerve monitoring system 108 can further be used during treatment to determine the effect of the therapeutic neuromodulation, and/or after treatment to

Aerin Exhibit 1011, Page 435 of 2183
Aerin Medical Inc. v. Neurent Medical Ltd.
IPR2025-01126

evaluate whether the therapeutic neuromodulation treated the target nerves to a desired degree. This information can be used to make various determinations related to the nerves proximate to the target site, such as whether the target site is suitable for neuromodulation. In addition, the nerve monitoring system 108 can also compare the detected neural locations and/or activity before and after therapeutic neuromodulation, and compare the change in neural activity to a predetermined threshold to assess whether the application of therapeutic neuromodulation was effective across the treatment site. For example, the nerve monitoring system 108 can further determine electroneurogram (ENG) signals based on recordings of electrical activity of neurons taken by the end effector 114 before and after therapeutic neuromodulation. Statistically meaningful (e.g., measurable or noticeable) decreases in the ENG signal(s) taken after neuromodulation can serve as an indicator that the nerves were sufficiently ablated. Additional features and functions of the nerve monitoring system 108, as well as other functions of the various components of the console 104, including the evaluation/feedback algorithms 110 for providing real-time feedback capabilities for ensuring optimal therapy for a given treatment is administered, are described in at least U.S. Publication No. 2016/0331459 and U.S. Publication No. 2018/0133460, the contents of each of which are incorporated by reference herein in their entireties.

The device 102 provides access to target sites associated with peripheral nerves for the subsequent neuromodulation of such nerves and treatment of a corresponding peripheral neurological condition or disorder. The peripheral nervous system is one of two components that make up the nervous system of bilateral animals, with the other part being the central nervous system (CNS). The PNS consists of the nerves and ganglia outside the brain and spinal cord. The main function of the PNS is to connect the CNS to the limbs and organs, essentially serving as a relay between the brain and spinal cord and the rest of the body. The peripheral nervous system is divided into the somatic nervous system and the autonomic nervous system. In the somatic nervous system, the cranial nerves are part of the PNS with the exception of the optic nerve (cranial nerve II), along with the retina. The second cranial nerve is not a true peripheral nerve but a tract of the diencephalon. Cranial nerve ganglia originated in the CNS. However, the remaining ten cranial nerve axons extend beyond the brain and are therefore considered part of the PNS. The autonomic nervous system exerts involuntary control over smooth muscle and glands. The connection between CNS and organs allows the system to be in two different

Aerin Exhibit 1011, Page 436 of 2183
Aerin Medical Inc. v. Neurent Medical Ltd.
IPR2025-01126

functional states: sympathetic and parasympathetic. Accordingly, the devices, systems, and methods of the present invention are useful in detecting, identifying, and precision targeting nerves associated with the peripheral nervous system for treatment of corresponding peripheral neurological conditions or disorders.

The peripheral neurological conditions or disorders may include, but are not limited to, chronic pain, movement disorders, epilepsy, psychiatric disorders, cardiovascular disorders, gastrointestinal disorders, genitourinary disorders, to name a few. For example, chronic pain may include headaches, complex regional pain syndrome, neuropathy, peripheral neuralgia, ischemic pain, failed back surgery syndrome, and trigeminal neuralgia. The movement disorders may include spasticity, Parkinson's disease, tremor, dystonia, Tourette syndrome, camptocormia, hemifacial spasm, and Meige syndrome. The psychiatric disorders may include depression, obsessive compulsive disorder, drug addiction, and anorexia/eating disorders. The functional restoration may include restoration of certain functions post traumatic brain injury, hearing impairment, and blindness. The cardiovascular disorders may include angina, heart failure, hypertension, peripheral vascular disorders, and stroke. The gastrointestinal disorders may include dysmotility and obesity. The genitourinary disorders may include painful bladder syndrome, interstitial cystitis, and voiding dysfunction.

For example, the system 100 may be used for the treatment of a cardiovascular disorder, such as arrhythmias or heart rhythm disorders, including, but not limited to, atrial fibrillation (AF or A-fib). Atrial fibrillation is an irregular and often rapid heart rate that can increase one's risk of stroke, heart failure, and other heart-related complications. Atrial fibrillation occurs when regions of cardiac tissue abnormally conduct electric signals to adjacent tissue, thereby disrupting the normal cardiac cycle and causing asynchronous rhythm. Atrial fibrillation symptoms often include heart palpitations, shortness of breath, and weakness. While episodes of atrial fibrillation can come and go, a person may develop atrial fibrillation that doesn't go away and thus will require treatment. Although atrial fibrillation itself usually isn't life-threatening, it is a serious medical condition that sometimes requires emergency treatment, as it may lead to complications. For example, atrial fibrillation is associated with an increased risk of heart failure, dementia, and stroke.

The normal electrical conduction system of the heart allows the impulse that is generated by the sinoatrial node (SA node) of the heart to be propagated to and stimulate the myocardium

Aerin Exhibit 1011, Page 437 of 2183
Aerin Medical Inc. v. Neurent Medical Ltd.
IPR2025-01126

(muscular layer of the heart). When the myocardium is stimulated, it contracts. It is the ordered stimulation of the myocardium that allows efficient contraction of the heart, thereby allowing blood to be pumped to the body. In AF, the normal regular electrical impulses generated by the sinoatrial node in the right atrium of the heart are overwhelmed by disorganized electrical impulses usually originating in the roots of the pulmonary veins. This leads to irregular conduction of ventricular impulses that generate the heartbeat. In particular, during AF, the heart's two upper chambers (the atria) beat chaotically and irregularly, out of coordination with the two lower chambers (the ventricles) of the heart.

During atrial fibrillation, the regular impulses produced by the sinus node for a normal heartbeat are overwhelmed by rapid electrical discharges produced in the atria and adjacent parts of the pulmonary veins. Sources of these disturbances are either automatic foci, often localized at one of the pulmonary veins, or a small number of localized sources in the form of either a re-entrant leading circle, or electrical spiral waves (rotors). These localized sources may be found in the left atrium near the pulmonary veins or in a variety of other locations through both the left or right atrium. There are three fundamental components that favor the establishment of a leading circle or a rotor: 1) slow conduction velocity of cardiac action potential; 2) short refractory period; and 3) small wavelength. Wavelength is the product of velocity and refractory period. If the action potential has fast conduction, with a long refractory period and/or conduction pathway shorter than the wavelength, an AF focus would not be established. In multiple wavelet theory, a wavefront will break into smaller daughter wavelets when encountering an obstacle, through a process called vortex shedding; but under proper conditions, such wavelets can reform and spin around a center, forming an AF focus.

The system 100 provides for the treatment of AF, in which the device 102 may provide access to and provide treatment of one or more target sites associated with nerves that correspond to, or are otherwise associated with, treating AF. For example, the device 102, in conjunction with the console 104, may detect, identify, and precision target cardiac tissue and subsequently deliver energy at a level or frequency sufficient to therapeutically modulate nerves associated with such cardiac tissue. The therapeutic modulation of such nerves is sufficient to disrupt the origin of the signals causing the AF and/or disrupt the conducting pathway for such signals.

Aerin Exhibit 1011, Page 438 of 2183
Aerin Medical Inc. v. Neurent Medical Ltd.
IPR2025-01126

Similar to the conduction system of the heart, a neural network exists which surrounds the heart and plays an important role in formation of the substrate of AF and when a trigger is originated, usually from pulmonary vein sleeves, AF occurs. This neural network includes ganglionated plexi (GP) located adjacent to pulmonary vein ostia which are under control of higher centers in normal people. For example, the heart is richly innervated by the autonomic nerves. The ganglion cells of the autonomic nerves are located either outside the heart (extrinsic) or inside the heart (intrinsic). Both extrinsic and intrinsic nervous systems are important for cardiac function and arrhythmogenesis. The vagal nerves include axons that come from various nuclei in the medulla. The extrinsic sympathetic nerves come from the paravertebral ganglia, including the superior cervical ganglion, middle cervical ganglion, the cervicothoracic (stellate) ganglion and the thoracic ganglia. The intrinsic cardiac nerves are found mostly in the atria, and are intimately involved in atrial arrhythmogenesis cardiovascular disorder, such as arrhythmias or heart rhythm disorders, including, but not limited to, atrial fibrillation. When GP become hyperactive owing to loss of inhibition from higher centers (e.g., in elderly), AF can occur.

The system 100 can be used to control hyperactive GP either by stimulating higher centers and their connections, such as vagus nerve stimulation, or simply by ablating GP. Accordingly, the device 102, in conjunction with the console 104, may detect and identify ganglionated plexus (GP) and further determine an energy level sufficient to therapeutically modulate or treat (i.e., ablate) the GP for the treatment of AF (i.e., surgically disrupting the origin of the signals causing the AF and disrupting the conducting pathway for such signals) while minimizing and/or preventing collateral damage to surrounding or adjacent non-neural tissue including bloods vessels and bone and non-targeted neural tissue. It should be noted that other nerves and/or cardiac tissue, or other structures, known to have an impact on or cause AF, may be targeted by the system 100, including, but not limited to, pulmonary veins (e.g., pulmonary vein isolation upon creation of lesions around PV ostia to prevent triggers from reaching atrial substrate).

In addition to treating arrhythmias, the system 100 may also be used for the treatment of other cardiovascular-related conditions, particularly those involving the kidney. The kidneys play a significant role in the progression of CHF, as well as in Chronic Renal Failure (CRF), End-Stage Renal Disease (ESRD), hypertension (pathologically high blood pressure), and other cardio-renal diseases.

Aerin Exhibit 1011, Page 439 of 2183
Aerin Medical Inc. v. Neurent Medical Ltd.
IPR2025-01126

The functions of the kidney can be summarized under three broad categories: filtering blood and excreting waste products generated by the body's metabolism; regulating salt, water, electrolyte and acid-base balance; and secreting hormones to maintain vital organ blood flow. Without properly functioning kidneys, a patient will suffer water retention, reduced urine flow and an accumulation of waste toxins in the blood and body. These conditions resulting from reduced renal function or renal failure (kidney failure) are believed to increase the workload of the heart.

For example, in a CHF patient, renal failure will cause the heart to further deteriorate as the water build-up and blood toxins accumulate due to the poorly functioning kidneys and, in turn, cause the heart further harm. CHF is a condition that occurs when the heart becomes damaged and reduces blood flow to the organs of the body. If blood flow decreases sufficiently, kidney function becomes impaired and results in fluid retention, abnormal hormone secretions and increased constriction of blood vessels. These results increase the workload of the heart and further decrease the capacity of the heart to pump blood through the kidney and circulatory system. This reduced capacity further reduces blood flow to the kidney. It is believed that progressively decreasing perfusion of the kidney is a principal non-cardiac cause perpetuating the downward spiral of CHF. Moreover, the fluid overload and associated clinical symptoms resulting from these physiologic changes are predominant causes for excessive hospital admissions, reduced quality of life, and overwhelming costs to the health care system due to CHF.

End-stage renal disease is another condition at least partially controlled by renal neural activity. There has been a dramatic increase in patients with ESRD due to diabetic nephropathy, chronic glomerulonephritis and uncontrolled hypertension. Chronic renal failure (CRF) slowly progresses to ESRD. CRF represents a critical period in the evolution of ESRD. The signs and symptoms of CRF are initially minor, but over the course of 2-5 years, become progressive and irreversible. While some progress has been made in combating the progression to, and complications of, ESRD, the clinical benefits of existing interventions remain limited.

Arterial hypertension is a major health problem worldwide. Treatment-resistant hypertension is defined as the failure to achieve target blood pressure despite the concomitant use of maximally tolerated doses of three different antihypertensive medications, including a diuretic. Treatment-resistant hypertension is associated with considerable morbidity and

Aerin Exhibit 1011, Page 440 of 2183
Aerin Medical Inc. v. Neurent Medical Ltd.
IPR2025-01126

mortality. Patients with treatment-resistant hypertension have markedly increased cardiovascular morbidity and mortality, facing an increase in the risk of myocardial infarction (MI), stroke, and death compared to patients whose hypertension is adequately controlled.

The autonomic nervous system is recognized as an important pathway for control signals that are responsible for the regulation of body functions critical for maintaining vascular fluid balance and blood pressure. The autonomic nervous system conducts information in the form of signals from the body's biologic sensors such as baroreceptors (responding to pressure and volume of blood) and chemoreceptors (responding to chemical composition of blood) to the central nervous system via its sensory fibers. It also conducts command signals from the central nervous system that control the various innervated components of the vascular system via its motor fibers.

It is known from clinical experience and research that an increase in renal sympathetic nerve activity leads to vasoconstriction of blood vessels supplying the kidney, decreased renal blood flow, decreased removal of water and sodium from the body, and increased renin secretion. It is also known that reduction of sympathetic renal nerve activity, e.g., via denervation, may reverse these processes.

The renal sympathetic nervous system plays a critical influence in the pathophysiology of hypertension. The adventitia of the renal arteries has efferent and afferent sympathetic nerves. Renal sympathetic activation via the efferent nerves initiates a cascade resulting in elevated blood pressure. Efferent sympathetic outflow leads to vasoconstriction with a subsequent reduction in glomerular blood flow, a lowering of the glomerular filtration rate, release of renin by the juxtaglomerular cells, and the subsequent activation of the renin-angiotensin-aldosterone axis leading to increased tubular reabsorption of sodium and water. Decreased glomerular filtration rate also prompts additional systemic sympathetic release of catecholamines. As a consequence, blood pressure increases by a rise in total blood volume and increased peripheral vascular resistance.

The system 100 can be used for the treatment of cardio-renal diseases, including hypertension, by providing renal neuromodulation and/or denervation. For example, the device 102 may be placed at one or more target sites associated with renal nerves other neural fibers that contribute to renal neural function, or other neural features. For example, the device 102, in conjunction with the console 104, may detect, identify, and precision target renal nerve tissue

Aerin Exhibit 1011, Page 441 of 2183
Aerin Medical Inc. v. Neurent Medical Ltd.
IPR2025-01126

and subsequently deliver energy at a level or frequency sufficient to therapeutically modulate nerves associated with such renal tissue. The therapeutic modulation of such renal nerves and/or renal tissue is sufficient to completely block or denervate the target neural structures and/or disrupt renal nervous activity, while minimizing and/or preventing collateral damage to surrounding or adjacent non-neural tissue including bloods vessels and bone and non-targeted neural tissue.

It should further be noted that the system 100 can be used to determine disease progression. In particular, the present system 100 can obtain measurements at one or more target sites associated with a given disease, disorder, or the like. Such measurements may be based on the active neural parameters (i.e., neuronal firing and active voltage monitoring) and may be used to identify neurons. The active neural parameters (and thus behavior) change with disease progression, thereby allowing the present system to identify such changes and determine a progression of the underlying disease or disorder. Such capabilities are possible based, at least in part, on the fact that the present system 100 is configured to monitor passive electric phenomena (i.e., the present system 100 determines the ohmic conductivity frequency, which remains consistent, while conductivity will be different based on disease or disorder progression).

FIG. 3 is a side view of one embodiment of a handheld device for providing therapeutic neuromodulation consistent with the present disclosure. As previously described, the device 102 includes an end effector (not shown) transformable between a collapsed/retracted configuration and an expanded deployed configuration, a shaft 116 operably associated with the end effector, and a handle 118 operably associated with the shaft 116. The handle 118 includes at least a first mechanism 126 for deployment of the end effector from collapsed/retracted configuration to the expanded, deployed configuration, and a second mechanism 128, separate from the first mechanism 124, for control of energy output by the end effector, specifically electrodes or other energy elements provided by the end effector. The handheld device 102 may further include an auxiliary line 121, which may provide a fluid connection between a fluid source, for example, and the shaft 116 such that fluid may be provided to a target site via the distal end of the shaft 116. In some embodiments, the auxiliary line 121 may provide a connection between a vacuum source and the shaft 116, such that the device 102 may include suction capabilities (via the distal end of the shaft 116).

Aerin Exhibit 1011, Page 442 of 2183
Aerin Medical Inc. v. Neurent Medical Ltd.
IPR2025-01126

FIG. 4 is an enlarged, perspective view of one embodiment of an end effector 214 consistent with the present disclosure. As shown, the end effector 214 is generally positioned at a distal portion 116b of the shaft 116. The end effector 214 is transformable between a low-profile delivery state to facilitate intraluminal delivery of the end effector 214 to a treatment site and an expanded state, as shown. The end effector 214 includes a plurality of struts 240 that are spaced apart from each other to form a frame or basket 242 when the end effector 214 is in the expanded state. The struts 240 can carry one or more energy delivery elements, such as a plurality of electrodes 244. In the expanded state, the struts 240 can position at least two of the electrodes 244 against tissue at a target site within a particular region. The electrodes 244 can apply bipolar or multi-polar RF energy to the target site to therapeutically modulate nerves associated with a peripheral neurological condition or disorder. In various embodiments, the electrodes 244 can be configured to apply pulsed RF energy with a desired duty cycle (e.g., 1 second on/0.5 seconds off) to regulate the temperature increase in the target tissue.

In the embodiment illustrated in FIG. 4, the basket 242 includes eight branches 246 spaced radially apart from each other to form at least a generally spherical structure, and each of the branches 246 includes two struts 240 positioned adjacent to each other. In other embodiments, however, the basket 242 can include fewer than eight branches 246 (e.g., two, three, four, five, six, or seven branches) or more than eight branches 246. In further embodiments, each branch 246 of the basket 242 can include a single strut 240, more than two struts 240, and/or the number of struts 240 per branch can vary. In still further embodiments, the branches 246 and struts 240 can form baskets or frames having other suitable shapes for placing the electrodes 244 in contact with tissue at the target site. For example, when in the expanded state, the struts 240 can form an ovoid shape, a hemispherical shape, a cylindrical structure, a pyramid structure, and/or other suitable shapes.

The end effector 214 can further include an internal or interior support member 248 that extends distally from the distal portion 116b of the shaft 116. A distal end portion 250 of the support member 248 can support the distal end portions of the struts 240 to form the desired basket shape. For example, the struts 240 can extend distally from the distal potion 116b of the shaft 116 and the distal end portions of the struts 240 can attach to the distal end portion 250 of the support member 248. In certain embodiments, the support member 248 can include an internal channel (not shown) through which electrical connectors (e.g., wires) coupled to the

Aerin Exhibit 1011, Page 443 of 2183
Aerin Medical Inc. v. Neurent Medical Ltd.
IPR2025-01126

electrodes 244 and/or other electrical features of the end effector 214 can run. In various embodiments, the internal support member 248 can also carry an electrode (not shown) at the distal end portion 250 and/or along the length of the support member 248.

The basket 242 can transform from the low-profile delivery state to the expanded state (shown in FIG. 4) by either manually manipulating a handle of the device 102, interacting with the first mechanism 126 for deployment of the end effector 214 from collapsed/retracted configuration to the expanded, deployed configuration, and/or other feature at the proximal portion of the shaft 116 and operably coupled to the basket 242. For example, to move the basket 242 from the expanded state to the delivery state, an operator can push the support member 248 distally to bring the struts 240 inward toward the support member 248. An introducer or guide sheath (not shown) can be positioned over the low-profile end effector 214 to facilitate intraluminal delivery or removal of the end effector 214 from or to the target site. In other embodiments, the end effector 214 is transformed between the delivery state and the expanded state using other suitable means, such as the first mechanism 126, as will be described in greater detail herein.

The individual struts 240 can be made from a resilient material, such as a shape-memory material (e.g., Nitinol) that allows the struts 240 to self-expand into the desired shape of the basket 242 when in the expanded state. In other embodiments, the struts 240 can be made from other suitable materials and/or the end effector 214 can be mechanically expanded via a balloon or by proximal movement of the support member 248. The basket 242 and the associated struts 240 can have sufficient rigidity to support the electrodes 244 and position or press the electrodes 244 against tissue at the target site. In addition, the expanded basket 242 can press against surrounding anatomical structures proximate to the target site and the individual struts 240 can at least partially conform to the shape of the adjacent anatomical structures to anchor the end effector 214 at the treatment site during energy delivery. In addition, the expansion and conformability of the struts 240 can facilitate placing the electrodes 244 in contact with the surrounding tissue at the target site.

At least one electrode 244 is disposed on individual struts 240. In the illustrated embodiment, two electrodes 244 are positioned along the length of each strut 240. In other embodiments, the number of electrodes 244 on individual struts 240 be only one, more than two, zero, and/or the number of electrodes 244 on the different struts 240 can vary. The electrodes

Aerin Exhibit 1011, Page 444 of 2183
Aerin Medical Inc. v. Neurent Medical Ltd.
IPR2025-01126

244 can be made from platinum, iridium, gold, silver, stainless steel, platinum-iridium, cobalt chromium, iridium oxide, polyethylenedioxythiophene ("PEDOT"), titanium, titanium nitride, carbon, carbon nanotubes, platinum grey, Drawn Filled Tubing ("DFT") with a silver core made by Fort Wayne Metals of Fort Wayne, Ind., and/or other suitable materials for delivery RF energy to target tissue.

In certain embodiments, each electrode 444 can be operated independently of the other electrodes 244. For example, each electrode can be individually activated and the waveform, polarity and amplitude of each electrode can be selected by an operator or a control algorithm (e.g., executed by the controller 107 of FIG. 1A). Various embodiments of such independently controlled electrodes 244 are described in greater detail herein. The selective independent control of the electrodes 244 allows the end effector 214 to deliver RF energy to highly customized regions and to further create multiple micro-lesions to selectively modulate a target neural structure by effectively causing multi-point interruption of a neural signal due to the multiple micro-lesions. For example, a select portion of the electrodes 244 can be activated to target neural fibers in a specific region while the other electrodes 244 remain inactive. In certain embodiments, for example, electrodes 244 may be activated across the portion of the basket 242 that is adjacent to tissue at the target site, and the electrodes 244 that are not proximate to the target tissue can remain inactive to avoid applying energy to non-target tissue. Such configurations facilitate selective therapeutic modulation of nerves along a portion of a target site without applying energy to structures in other portions of the target site.

The electrodes 244 can be electrically coupled to an RF generator (e.g., the generator 106 of FIG. 1A) via wires (not shown) that extend from the electrodes 244, through the shaft 116, and to the RF generator. When each of the electrodes 244 is independently controlled, each electrode 244 couples to a corresponding wire that extends through the shaft 116. In other embodiments, multiple electrodes 244 can be controlled together and, therefore, multiple electrodes 244 can be electrically coupled to the same wire extending through the shaft 116. The RF generator and/or components operably coupled (e.g., a control module) thereto can include custom algorithms to control the activation of the electrodes 244. For example, the RF generator can deliver RF power at about 200-300 W to the electrodes 244, and do so while activating the electrodes 244 in a predetermined pattern selected based on the position of the end effector 214 relative to the treatment site and/or the identified locations of the target nerves. In other

Aerin Exhibit 1011, Page 445 of 2183
Aerin Medical Inc. v. Neurent Medical Ltd.
IPR2025-01126

embodiments, the RF generator delivers power at lower levels (e.g., less than 1 W, 2-5W, 5-15 W, 15-50 W, 50-150 W, etc.) and/or higher power levels.

The end effector 214 can further include one or more sensors 252 (e.g., temperature sensors, impedance sensors, etc.) disposed on the struts 240 and/or other portions of the end effector 214 and configured to sense/detect one or more properties associated with tissue at a target site. For example, temperature sensors are configured to detect the temperature adjacent thereto. The sensors 252 can be electrically coupled to a console (e.g., the console 104 of FIG. 1A) via wires (not shown) that extend through the shaft 116. In various embodiments, the sensors 252 can be positioned proximate to the electrodes 244 to detect various properties of targeted tissue and/or the treatment associated therewith. As will be described in greater detail herein, the sensed data can be provided to the console 104, wherein such data is generally related to at least bioelectric properties of tissue at the target site. In turn, the console 104 (via the controller 107, monitoring system 108, and evaluation/feedback algorithms 110) is configured to process such data and determine to identify a type of each of the one or more tissues at the target site. The console (via the controller 107, monitoring system 108, and evaluation/feedback algorithms 110) is further configured to determine a treatment pattern (also referred to herein as "ablation pattern") to be delivered by one or more of the plurality of electrodes of the end effector based on the tissue type, as well as tissue location and/or depth. The ablation energy associated with the ablation pattern is at a level sufficient to ablate a targeted tissue and minimize and/or prevent collateral damage to surrounding or adjacent non-targeted tissue at the target site. In particular, a given treatment pattern may include, for example, a predetermined treatment time, a precise level of energy to be delivered, and a predetermined impedance threshold for that particular tissue.

The device 102 is further be configured to provide the console 104 with sensed data in the form of feedback data, in real-, or near-real, time. The real-time feedback data is associated with the effect of the therapeutic stimulation on the targeted tissue. For example, feedback data may be associated with efficacy of ablation upon targeted tissue (e.g., neural tissue) during and/or after delivery of initial energy from one or more of the plurality of electrodes. Accordingly, the console 104 (via the controller 107, monitoring system 108, and evaluation/feedback algorithms 110) is configured to process such real-time feedback data to determine if certain properties of the targeted tissue undergoing treatment (e.g., tissue

Aerin Exhibit 1011, Page 446 of 2183
Aerin Medical Inc. v. Neurent Medical Ltd.
IPR2025-01126

temperature, tissue impedance, etc.) reach predetermined thresholds for irreversible tissue damage.

More specifically, the console 104 (via the controller 107, monitoring system 108, and evaluation/feedback algorithms 110) is configured to automatically control delivery of energy to the targeted tissue based on the processing of the real-time feedback data, wherein such data includes at least impedance measurement data associated with the targeted tissue collected during delivery of energy to the targeted tissue. The console 104 (via the controller 107, monitoring system 108, and evaluation/feedback algorithms 110) is configured to process impedance measurement data to detect a slope change event (e.g., an asymptotic rise) within an impedance profile associated with the treatment, wherein, with reference to the predetermined impedance threshold, the slope change event is indicative of whether the ablation/modulation of the targeted tissue is successful. In turn, the controller 107 can automatically tune energy output individually for the one or more electrodes after an initial level of energy has been delivered based, at least in part, on monitoring and processing of the real-time feedback data, most notably impedance data, to ensure the desired ablation/modulation is achieved. For example, once a slope change event (e.g., an asymptotic rise) within an impedance profile is detected, with reference to the predetermined impedance threshold of the targeted tissue (which is known via the treatment pattern), the application of therapeutic neuromodulation energy can be terminated to allow the tissue to remain intact and to further prevent and/or minimize collateral damage to surrounding or adjacent non-targeted tissue. For example, in certain embodiments, the energy delivery can automatically be tuned based on an evaluation/feedback algorithm (e.g., the evaluation/feedback algorithm 110 of FIG. 1A) stored on a console (e.g., the console 104 of FIG. 1A) operably coupled to the end effector 214.

FIGS. 5A-5F are various views of another embodiment of an end effector 314 consistent with the present disclosure. As generally illustrated, the end effector 314 is a multi-segmented end effector, which includes at least a first segment 322 and a second segment 324 spaced apart from one another. The first segment 322 is generally positioned closer to a distal portion of the shaft 116, and is thus sometimes referred to herein as the proximal segment 322, while the second segment 324 is generally positioned further from the distal portion of the shaft 116 and is thus sometimes referred to herein as the distal segment 324. Each of the first and second segments 322 and 324 is transformable between a retracted configuration, which includes a low-

Aerin Exhibit 1011, Page 447 of 2183
Aerin Medical Inc. v. Neurent Medical Ltd.
IPR2025-01126

profile delivery state and a deployed configuration, which includes an expanded state, as shown in the figures. The end effector 314 is generally designed to be positioned within a nasal region of the patient for the treatment of a rhinosinusitis condition while minimizing or avoiding collateral damage to surrounding tissue, such as blood vessels or bone. In particular, the end effector 314 is configured to be advanced within the nasal cavity and be positioned at one or more target sites generally associated with postganglionic parasympathetic fibers that innervate the nasal mucosa. In turn, the end effector 314 is configured to therapeutically modulate the postganglionic parasympathetic nerves.

It should be noted, however, that an end effector consistent with the present disclosure may be multi-segmented in a similar fashion as end effector 314 and may be used to provide treatment in other regions of the patient outside of the nasal cavity and thus is not limited to the particular design/configuration as the end effector 314 nor the intended treatment site (e.g., nasal cavity). Rather, other multi-segmented designs are contemplated for use in particular regions of a patient, particularly regions in which the use of multiple and distinct segments would be advantageous, as is the case with the end effector 314 design due to the anatomy of the nasal cavity.

FIG. 5A is an enlarged, perspective view of the multi-segment end effector illustrating the first (proximal) segment 322 and second (distal) segment 324. FIG. 5B is an exploded, perspective view of the multi-segment end effector 314. FIG. 5C is an enlarged, top view of the multi-segment end effector 314. FIG. 5D is an enlarged, side view of the multi-segment end effector 314. FIG. 5E is an enlarged, front (proximal facing) view of the first (proximal) segment 322 of the multi-segment end effector 314 and FIG. 5F is an enlarged, front (proximal facing) view of the second (distal) segment 324 of the multi-segment end effector 314.

As illustrated, the first segment 322 includes at least a first set of flexible support elements, generally in the form of wires, arranged in a first configuration, and the second segment 324 includes a second set of flexible support elements, also in the form of wires, arranged in a second configuration. The first and second sets of flexible support elements include composite wires having conductive and elastic properties. For example, in some embodiments, the composite wires include a shape memory material, such as Nitinol. The flexible support elements may further include a highly lubricious coating, which may allow for desirable electrical insulation properties as well as desirable low friction surface finish. Each of

Aerin Exhibit 1011, Page 448 of 2183
Aerin Medical Inc. v. Neurent Medical Ltd.
IPR2025-01126

the first and second segments 322, 324 is transformable between a retracted configuration and an expanded deployed configuration such that the first and second sets of flexible support elements are configured to position one or more electrodes provided on the respective segments (see electrodes 336 in FIGS. 5E and 5F) into contact with one or more target sites when in the deployed configuration.

As shown, when in the expanded deployed configuration, the first set of support elements of the first segment 322 includes at least a first pair of struts 330a,330b, each comprising a loop (or leaflet) shape and extending in an upward direction and a second pair of struts 332a, 332b, each comprising a loop (or leaflet) shape and extending in a downward direction, generally in an opposite direction relative to at least the first pair of struts 330a, 330b. It should be noted that the terms upward and downward are used to describe the orientation of the first and second segments 322, 324 relative to one another. More specifically, the first pair of struts 330a, 330b generally extend in an outward inclination in a first direction relative to a longitudinal axis of the multi-segment end effector 314 and are spaced apart from one another. Similarly, the second pair of struts 332a, 332b extend in an outward inclination in a second direction substantially opposite the first direction relative to the longitudinal axis of the multi-segment end effector and spaced apart from one another.

The second set of support elements of the second segment 324, when in the expanded deployed configuration, includes a second set of struts 334(1), 334(2), 334(n) (approximately six struts), each comprising a loop shape extending outward to form an open-ended circumferential shape. As shown, the open-ended circumferential shape generally resembles a blooming flower, wherein each looped strut 334 may generally resemble a flower petal. It should be noted that the second set of struts 334 may include any number of individual struts and is not limited to six, as illustrated. For example, in some embodiments, the second segment 124 may include two, three, four, five, six, seven, eight, nine, ten, or more struts 334.

The first and second segments 322, 324, specifically struts 330, 332, and 334 include one or more energy delivery elements, such as a plurality of electrodes 336. It should be noted that any individual strut may include any number of electrodes 336 and is not limited to one electrode, as shown. In the expanded state, the struts 330, 332, and 334 can position any number of electrodes 336 against tissue at a target site within the nasal region (e.g., proximate to the palatine bone inferior to the SPF). The electrodes 336 can apply bipolar or multi-polar

Aerin Exhibit 1011, Page 449 of 2183
Aerin Medical Inc. v. Neurent Medical Ltd.
IPR2025-01126

radiofrequency (RF) energy to the target site to therapeutically modulate postganglionic parasympathetic nerves that innervate the nasal mucosa proximate to the target site. In various embodiments, the electrodes 336 can be configured to apply pulsed RF energy with a desired duty cycle (e.g., 1 second on/0.5 seconds off) to regulate the temperature increase in the target tissue.

The first and second segments 322, 324 and the associated struts 330, 332, and 334 can have sufficient rigidity to support the electrodes 336 and position or press the electrodes 336 against tissue at the target site. In addition, each of the expanded first and second segments 322, 324 can press against surrounding anatomical structures proximate to the target site (e.g., the turbinates, the palatine bone, etc.) and the individual struts 330, 332, 334 can at least partially conform to the shape of the adjacent anatomical structures to anchor the end effector 314. In addition, the expansion and conformability of the struts 330, 332, 334 can facilitate placing the electrodes 336 in contact with the surrounding tissue at the target site. The electrodes 336 can be made from platinum, iridium, gold, silver, stainless steel, platinum-iridium, cobalt chromium, iridium oxide, polyethylenedioxythiophene (PEDOT), titanium, titanium nitride, carbon, carbon nanotubes, platinum grey, Drawn Filled Tubing (DFT) with a silver core, and/or other suitable materials for delivery RF energy to target tissue. In some embodiments, such as illustrated in FIG. 6, a strut may include an outer jacket surrounding a conductive wire, wherein portions of the outer jacket are selectively absent along a length of the strut, thereby exposing the underlying conductive wire so as to act as an energy delivering element (i.e., an electrode) and/or sensing element, as described in greater detail herein.

In certain embodiments, each electrode 336 can be operated independently of the other electrodes 336. For example, each electrode can be individually activated and the polarity and amplitude of each electrode can be selected by an operator or a control algorithm (e.g., executed by the controller 107 previously described herein). The selective independent control of the electrodes 336 allows the end effector 314 to deliver RF energy to highly customized regions. For example, a select portion of the electrodes 336 can be activated to target neural fibers in a specific region while the other electrodes 336 remain inactive. In certain embodiments, for example, electrodes 136 may be activated across the portion of the second segment 324 that is adjacent to tissue at the target site, and the electrodes 336 that are not proximate to the target tissue can remain inactive to avoid applying energy to non-target tissue. Such configurations

Aerin Exhibit 1011, Page 450 of 2183
Aerin Medical Inc. v. Neurent Medical Ltd.
IPR2025-01126

facilitate selective therapeutic modulation of nerves on the lateral nasal wall within one nostril without applying energy to structures in other portions of the nasal cavity.

The electrodes 336 are electrically coupled to an RF generator (e.g., the generator 106 of FIG. 1A) via wires (not shown) that extend from the electrodes 336, through the shaft 116, and to the RF generator. When each of the electrodes 336 is independently controlled, each electrode 336 couples to a corresponding wire that extends through the shaft 116. In other embodiments, multiple electrodes 336 can be controlled together and, therefore, multiple electrodes 336 can be electrically coupled to the same wire extending through the shaft 116. As previously described, the RF generator and/or components operably coupled (e.g., a control module) thereto can include custom algorithms to control the activation of the electrodes 336. For example, the RF generator can deliver RF power at about 460-480 kHz (+ or - 5 kHz) to the electrodes 336, and do so while activating the electrodes 336 in a predetermined pattern selected based on the position of the end effector 314 relative to the treatment site and/or the identified locations of the target tissues. It should further be noted that the electrodes 336 may be individually activated and controlled (i.e., controlled level of energy output and delivery) based, at least in part, on feedback data. The RF generator is able to provide bipolar low power (10 watts with maximum setting of 50 watts) RF energy delivery, and further provide multiplexing capabilities (across a maximum of 30 channels).

Once deployed, the first and second segments 322, 324 contact and conform to a shape of the respective locations, including conforming to and complementing shapes of one or more anatomical structures at the respective locations. In turn, the first and second segments 322, 324 become accurately positioned within the nasal cavity to subsequently deliver, via one or more electrodes 336, precise and focused application of RF thermal energy or non-thermal energy to the one or more target sites to thereby therapeutically modulate associated neural tissue. More specifically, the first and second segments 322, 324 have shapes and sizes when in the expanded configuration that are specifically designed to place portions of the first and second segments 322, 324, and thus one or more electrodes associated therewith 336, into contact with target sites within nasal cavity associated with postganglionic parasympathetic fibers that innervate the nasal mucosa.

For example, the first set of flexible support elements of the first segment 322 conforms to and complements a shape of a first anatomical structure at the first location when the first

Aerin Exhibit 1011, Page 451 of 2183
Aerin Medical Inc. v. Neurent Medical Ltd.
IPR2025-01126

segment 322 is in the deployed configuration and the second set of flexible support elements of the second segment 124 conforms to and complements a shape of a second anatomical structure at the second location when the second segment is in the deployed configuration. The first and second anatomical structures may include, but are not limited to, inferior turbinate, middle turbinate, superior turbinate, inferior meatus, middle meatus, superior meatus, pterygopalatine region, pterygopalatine fossa, sphenopalatine foramen, accessory sphenopalatine foramen(ae), and sphenopalatine micro-foramen(ae).

In some embodiments, the first segment 322 of the multi-segment end effector 314 is configured in a deployed configuration to fit around at least a portion of a middle turbinate at an anterior position relative to the middle turbinate and the second segment 324 of the multi-segment end effector is configured in a deployed configuration to contact a plurality of tissue locations in a cavity at a posterior position relative to the middle turbinate.

For example, the first set of flexible support elements of the first segment (i.e., struts 330 and 332) conforms to and complements a shape of a lateral attachment and posterior-inferior edge of the middle turbinate when the first segment 322 is in the deployed configuration and the second set of flexible support elements (i.e., struts 334) of the second segment 324 contact a plurality of tissue locations in a cavity at a posterior position relative to the lateral attachment and posterior-inferior edge of middle turbinate when the second segment 324 is in the deployed configuration. Accordingly, when in the deployed configuration, the first and second segments 322, 324 are configured to position one or more associated electrodes 336 at one or more target sites relative to either of the middle turbinate and the plurality of tissue locations in the cavity behind the middle turbinate. In turn, electrodes 336 are configured to deliver RF energy at a level sufficient to therapeutically modulate postganglionic parasympathetic nerves innervating nasal mucosa at an innervation pathway within the nasal cavity of the patient.

As illustrated in FIG. 5E, the first segment 322 comprises a bilateral geometry. In particular, the first segment 322 includes two identical sides, including a first side formed of struts 330a, 332a and a second side formed of struts 330b, 332b. This bilateral geometry allows at least one of the two sides to conform to and accommodate an anatomical structure within the nasal cavity when the first segment 322 is in an expanded state. For example, when in the expanded state, the plurality of struts 330a, 332a contact multiple locations along multiple portions of the anatomical structure and electrodes provided by the struts are configured to emit

Aerin Exhibit 1011, Page 452 of 2183
Aerin Medical Inc. v. Neurent Medical Ltd.
IPR2025-01126

energy at a level sufficient to create multiple micro-lesions in tissue of the anatomical structure that interrupt neural signals to mucus producing and/or mucosal engorgement elements. In particular, struts 330a, 332a conform to and complement a shape of a lateral attachment and posterior-inferior edge of the middle turbinate when the first segment 322 is in the deployed configuration, thereby allowing for both sides of the anatomical structure to receive energy from the electrodes. By having this independence between first and second side (i.e., right and left side) configurations, the first segment 322 is a true bilateral device. By providing a bilateral geometry, the multi-segment end effector 314 does not require a repeat use configuration to treat the other side of the anatomical structure, as both sides of the structure are accounted at the same time due to the bilateral geometry. The resultant micro-lesion pattern can be repeatable and is predictable in both macro element (depth, volume, shape parameter, surface area) and can be controlled to establish low to high effects of each, as well as micro elements (the thresholding of effects within the range of the macro envelope can be controlled), as well be described in greater detail herein. The systems of the present invention are further able to establish gradients within allowing for control over neural effects without having widespread effect to other cellular bodies, as will be described in greater detail herein.

FIG. 7 is a cross-sectional view of a portion of the shaft 116 of the handheld device taken along lines 7-7 of FIG. 3. As illustrated, the shaft 116 may be constructed from multiple components so as to have the ability to constrain the end effector in the retracted configuration (i.e., the low-profile delivery state) when the end effector is retracted within the shaft 116, and to further provide an atraumatic, low profile and durable means to deliver the end effector to the target site. The shaft 116 includes coaxial tubes which travel from the handle 118 to a distal end of the shaft 116. The shaft 116 assembly is low profile to ensure adequate delivery of therapy in areas requiring low-profile access. The shaft 116 includes an outer sheath 138, surrounding a hypotube 140, which is further assembled over electrode wires 129 which surround an inner lumen 142. The outer sheath 138 serves as the interface between the anatomy and the device 102. The outer sheath 138 may generally include a low friction PTFE liner to minimize friction between the outer sheath 138 and the hypotube 140 during deployment and retraction. In particular the outer sheath 138 may generally include an encapsulated braid along a length of the shaft 116 to provide flexibility while retaining kink resistance and further retaining column

Aerin Exhibit 1011, Page 453 of 2183
Aerin Medical Inc. v. Neurent Medical Ltd.
IPR2025-01126

and/or tensile strength. For example, the outer sheath 138 may include a soft Pebax material, which is atraumatic and enables smooth delivery through a passageway.

The hypotube 140 is assembled over the electrode wires starting within the handle 118 and travelling to the proximal end of the end effector. The hypotube 140 generally acts to protect the wires during delivery and is malleable to enable flexibility without kinking to thereby improve trackability. The hypotube 140 provides stiffness and enables torqueability of the device 102 to ensure accurate placement of the end effector 314. The hypotube 140 also provides a low friction exterior surface which enables low forces when the outer sheath 138 moves relative to the hypotube 140 during deployment and retraction or constraint. The shaft 116 may be pre-shaped in such a manner so as to complement a given anatomy (e.g., nasal cavity). For example, the hypotube 140 may be annealed to create a bent shaft 116 with a pre-set curve. The hypotube 140 may include a stainless-steel tubing, for example, which interfaces with a liner in the outer sheath 138 for low friction movement.

The inner lumen 142 may generally provide a channel for fluid extraction during a treatment procedure. For example, the inner lumen 142 extends from the distal end of the shaft 116 through the hypotube 140 and to atmosphere via a fluid line (line 121 of FIG. 3). The inner lumen 142 materials are chosen to resist forces of external components acting thereon during a procedure.

FIG. 8A is a side view of the handle of the handheld 118 and FIG. 8B is a side view of the handle 118 illustrating internal components enclosed within. The handle 118 generally includes an ergonomically-designed grip portion which provides ambidextrous use for both left and right handed use and conforms to hand anthropometrics to allow for at least one of an overhand grip style and an underhand grip style during use in a procedure. For example, the handle 118 may include specific contours, including recesses 144, 146, and 148 which are designed to naturally receive one or more of an operator's fingers in either of an overhand grip or underhand grip style and provide a comfortable feel for the operator. For example, in an underhand grip, recess 144 may naturally receive an operator's index finger, recess 146 may naturally receive an operator's middle finger, and recess 148 may naturally receive an operator's ring and little (pinkie or pinky) fingers which wrap around the proximal protrusion 150 and the operator's thumb naturally rests on a top portion of the handle 118 in a location adjacent to the first mechanism 126. In an overhand grip, the operator's index finger may naturally rest on the

Aerin Exhibit 1011, Page 454 of 2183
Aerin Medical Inc. v. Neurent Medical Ltd.
IPR2025-01126

top portion of the handle 118, adjacent to the first mechanism 126, while recess 144 may naturally receive the operator's middle finger, recess 146 may naturally receive a portion of the operator's middle and/or ring fingers, and recess 148 may naturally receive and rest within the space (sometimes referred to as the purlicue) between the operator's thumb and index finger.

As previously described, the handle includes multiple user-operated mechanisms, including at least a first mechanism 126 for deployment of the end effector from the collapsed/retracted configuration to the expanded deployed configuration and a second mechanism 128 for controlling of energy output by the end effector, notably energy delivery from one or more electrodes. As shown, the user inputs for the first and second mechanisms 126, 128 are positioned a sufficient distance to one another to allow for simultaneous one-handed operation of both user inputs during a procedure. For example, user input for the first mechanism 126 is positioned on a top portion of the handle 118 adjacent the grip portion and user input for the second mechanism 128 is positioned on side portions of the handle 118 adjacent the grip portion. As such, in an underhand grip style, the operator's thumb rests on the top portion of the handle adjacent to the first mechanism 126 and at least their middle finger is positioned adjacent to the second mechanism 128, each of the first and second mechanisms 126, 128 accessible and able to be actuated. In an overhand grip system, the operator's index finger rests on the top portion of the handle adjacent to the first mechanism 126 and at least their thumb is positioned adjacent to the second mechanism 128, each of the first and second mechanisms 126, 128 accessible and able to be actuated. Accordingly, the handle accommodates various styles of grip and provides a degree of comfort for the surgeon, thereby further improving execution of the procedure and overall outcome.

Referring to FIG. 8B, the various components provided within the handle 118 are illustrated. As shown, the first mechanism 126 may generally include a rack and pinion assembly providing movement of end effector between the retracted and deployed configurations in response to input from a user-operated controller. The rack and pinion assembly generally includes a set of gears 152 for receiving input from the user-operated controller and converting the input to linear motion of a rack member 154 operably associated with at least one of the shaft 116 and the end effector. The rack and pinion assembly comprises a gearing ratio sufficient to balance a stroke length and retraction and deployment forces, thereby improving control over the deployment of the end effector. As shown, the rack member 154 may be coupled to a portion of

Aerin Exhibit 1011, Page 455 of 2183
Aerin Medical Inc. v. Neurent Medical Ltd.
IPR2025-01126

the shaft 116, for example, such that movement of the rack member 154 in a direction towards a proximal end of the handle 118 results in corresponding movement of the shaft 116 while the end effector remains stationary, thereby exposing the end effector and allowing the end effector to transition from the constrained, retracted configuration to the expanded, deployed configuration. Similarly, movement of the rack member 154 in a direction towards a distal end of the handle 118 results in corresponding movement of the shaft 116 while the end effector remains stationary, and thereby encloses the end effector within the shaft 116. It should be noted that, in other embodiments, the rack member 154 may be directly coupled to a portion of the end effector such that movement of the rack member 154 results in corresponding movement of the end effector while the shaft 116 remains stationary, thereby transitioning the end effector between the retracted and deployed configurations.

The user-operated controller associated with the first mechanism 126 may include a slider mechanism operably associated with the rack and pinion rail assembly. Movement of the slider mechanism in a rearward direction towards a proximal end of the handle results in transitioning of the end effector to the deployed configuration and movement of the slider mechanism in a forward direction towards a distal end of the handle results in transitioning of the end effector to the retracted configuration. In other embodiment, the user-operated controller associated with the first mechanism 126 may include a scroll wheel mechanism operably associated with the rack and pinion rail assembly. Rotation of the wheel in a rearward direction towards a proximal end of the handle results in transitioning of the end effector to the deployed configuration and rotation of the wheel in a forward direction towards a distal end of the handle results in transitioning of the end effector to the retracted configuration.

FIGS. 9A, 9B, and 9C are block diagrams illustrating the process of sensing, via an end effector, data associated with one or more tissues at a target site, notably bioelectric properties of one more tissues at the target site, and the subsequent processing of such data (via the controller 107, monitoring system 108, and evaluation/feedback algorithms 110) to determine the type of tissue(s) at the target site, determining a treatment pattern to be delivered by one or more of the plurality of electrodes of the end effector based on identified tissue types (as well as tissue location and/or depth), and subsequent receipt and processing of real-time feedback data associated with the targeted tissue undergoing treatment. The ablation energy associated with

Aerin Exhibit 1011, Page 456 of 2183
Aerin Medical Inc. v. Neurent Medical Ltd.
IPR2025-01126

the ablation pattern is at a level sufficient to ablate a targeted tissue and minimize and/or prevent collateral damage to surrounding or adjacent non-targeted tissue at the target site.

It should be noted that, while the block diagrams of FIGS. 9A, 9B, and 9C include reference to end effector 214, other end effector embodiments, including end effector 314, are similarly configured with respect to sensing data associated with at least the presence of neural tissue and other properties of the neural tissue, including neural tissue depth. Accordingly, the following process is not limited to end effector 214.

FIG. 9A is a block diagram illustrating delivery of non-therapeutic energy from electrodes 244 of the end effector at a frequency for sensing one or more properties associated with tissue at a target site in response to the non-therapeutic energy.

As previously described, the handheld treatment device includes an end effector comprising a micro-electrode array arranged about a plurality of struts. For example, end effector 214 includes a plurality of struts 240 that are spaced apart from each other to form a frame or basket 242 when the end effector 214 is in the expanded state. The struts 240 include a plurality of energy delivery elements, such as a plurality of electrodes 244. In the expanded state, each of the plurality of struts is able to conform to and accommodate an anatomical structure at a target site. When positioned, the struts may contact multiple locations along multiple portions of a target site and thereby position one or more electrodes 244 against tissue at a target site. At least a subset of electrodes is configured to deliver non-therapeutic stimulating energy at a frequency/waveform to respective positions at the target site to thereby sense the bioelectric properties of the one or more tissues at the target site, and further convey such data to the console 104. In addition to bioelectric properties, the data may also include at least one of physiological properties and thermal properties of tissue at the target site.

For example, upon delivering non-therapeutic stimulating energy (via one or more electrodes 244) to respective positions, various properties of the tissue at the one or more target sites can be detected. This information can then be transmitted to the console 104, particularly the controller 107, monitoring system 108, and evaluation/feedback algorithms 110 to determine the anatomy at the target site (e.g., tissue types, tissue locations, vasculature, bone structures, foramen, sinuses, etc.), locate a tissue of interest (targeted tissue to receive electric therapeutic stimulation), such as neural tissue, differentiate between different types of neural tissue, and map the anatomical and/or neural structure at the target site. For example, the end effector 214 can be

Aerin Exhibit 1011, Page 457 of 2183
Aerin Medical Inc. v. Neurent Medical Ltd.
IPR2025-01126

used to detect resistance, complex electrical impedance, dielectric properties, temperature, and/or other properties that indicate the presence of neural fibers and/or other anatomical structures in the target region. In certain embodiments, the end effector 214, together with the console 104 components, can be used to determine resistance (rather than impedance) of the tissue (i.e., the load) to more accurately identify the characteristics of the tissue. For example, the evaluation/feedback algorithms 110 can determine resistance of the tissue by detecting the actual power and current of the load (e.g., via the electrodes 244).

In some embodiments, the system 100 provides resistance measurements with a high degree of accuracy and a very high degree of precision, such as precision measurements to the hundredths of an Ohm (e.g., 0.01Ω) for the range of 1-50Ω. The high degree of resistance detection accuracy provided by the system 100 allows for the detection sub-microscale structures, including the firing of neural tissue, differences between neural tissue and other anatomical structures (e.g., blood vessels), and even different types of neural tissue. This information can be analyzed by the evaluation/feedback algorithms 110 and/or the controller 107 and communicated to the operator via a high resolution spatial grid (e.g., on the display 112) and/or other type of display to identify neural tissue and other anatomy at the treatment site and/or indicate predicted neuromodulation regions based on the ablation pattern with respect to the mapped anatomy.

As previously described, in certain embodiments, each electrode 244 can be operated independently of the other electrodes 244. For example, each electrode can be individually activated and the polarity and amplitude of each electrode can be selected by an operator or a control algorithm executed by the controller 107. The selective independent control of the electrodes 244 allows the end effector 214 to detect information (i.e., the presence of neural tissue, depth of neural tissue, and other physiological and bioelectrical properties) and subsequently deliver RF energy to highly customized regions. For example, a select portion of the electrodes 244 can be activated to target specific neural fibers in a specific region while the other electrodes 244 remain inactive. In addition, the electrodes 244 can be individually activated to stimulate or therapeutically modulate certain regions in a specific pattern at different times (e.g., via multiplexing), which facilitates detection of anatomical parameters across a zone of interest and/or regulated therapeutic neuromodulation.

Aerin Exhibit 1011, Page 458 of 2183
Aerin Medical Inc. v. Neurent Medical Ltd.
IPR2025-01126

As previously described, the system 100 can identify tissue type of one or more tissues at a target site prior to therapy such that the therapeutic stimulation can be applied to precise regions including targeted tissue, while avoiding negative effects on non-targeted tissue and structures (e.g., blood vessels). For example, the system 100 can detect various bioelectrical parameters in an interest zone to determine the location and morphology of various tissue types (e.g., different types of neural tissue, neuronal directionality, etc.) and/or other tissue (e.g., glandular structures, vessels, bony regions, etc.). The system 100 is further configured to measure bioelectric potential.

To do so, one or more of the electrodes 244 is placed in contact with an epithelial surface at a region of interest (e.g., a treatment site). Electrical stimuli (e.g., constant or pulsed currents at one or more frequencies, and/or alternating (sine, square, triangle, sawtooth, etc.) wave or direct constant current/power/voltage source at one or more frequencies) are applied to the tissue by one or more electrodes 244 at or near the treatment site, and the voltage and/or current differences based on the wave applied at various different frequencies between various pairs of electrodes 244 of the end effector 214 may be measured to produce a spectral profile or map of the detected bioelectric potential, which can be used to identify different types of tissues (e.g., vessels, neural tissue, and/or other types of tissue) in the region of interest. For example, a fixed current (i.e., direct or alternating current) can be applied to a pair of electrodes 244 adjacent to each other and the resultant voltages and/or currents between other pairs of adjacent electrodes 244 are measured. Conversely, a fixed voltage (i.e. mono or bi-phasic) can be applied to a pair of electrodes 244 adjacent to each other and the resultant current between other pairs of adjacent electrodes 244 are measured. It will be appreciated that the current injection electrodes 244 and measurement electrodes 244 need not be adjacent, and that modifying the spacing between the two current injection electrodes 244 can affect the depth of the recorded signals. For example, closely-spaced current injection electrodes 244 provided recorded signals associated with tissue deeper from the surface of the tissue than further spaced apart current injection electrodes 244 that provide recorded signals associated with tissue at shallower depths. Recordings from electrode pairs with different spacings may be merged to provide additional information on depth and localization of anatomical structures.

Further, complex impedance and/or resistance measurements of the tissue at the region of interest can be detected directly from current-voltage data provided by the bioelectric potential

Aerin Exhibit 1011, Page 459 of 2183
Aerin Medical Inc. v. Neurent Medical Ltd.
IPR2025-01126

measurements while differing levels of frequency currents are applied to the tissue (e.g., via the end effector 114), and this information can be used to map the neural and anatomical structures by the use of frequency differentiation reconstruction. In particular, current-voltage data may be observed with the difference in dielectric and conductive properties of tissue type when different levels of current frequencies are applied. Applying the stimuli at different frequencies will target different stratified layers or cellular bodies or clusters. At high signal frequencies (e.g., electrical injection or stimulation), for example, cell membranes of the neural tissue do not impede current flow, and the current passes directly through the cell membranes. In this case, the resultant measurement (e.g., impedance, resistance, capacitance, and/or induction) is a function of the intracellular and extracellular tissue and liquids. At low signal frequencies, the membranes impede current flow to provide different defining characteristics of the tissues, such as the shapes of the cells or cell spacing. The stimulation frequencies can be in the megahertz range, in the kilohertz range (e.g., 400-500 kHz, 450-480 kHz, etc.), and/or other frequencies attuned to the tissue being stimulated and the characteristics of the device being used. The detected complex impedance or resistances levels from the zone of interest can be displayed to the user (e.g., via the display 112) to visualize certain structures based on the stimulus frequency.

Further, the inherent morphology and composition of the anatomical structures within a given region or zone of a patient's body react differently to different frequencies and, therefore, specific frequencies can be selected to identify very specific structures. For example, the morphology or composition of targeted structures for anatomical mapping may depend on whether the cells of tissue or other structure are membranonic, stratified, and/or annular. In various embodiments, the applied stimulation signals can have predetermined frequencies attuned to specific neural tissue, such as the level of myelination and/or morphology of the myelination. For example, second axonal parasympathetic structures are poorly myelinated than sympathetic nerves or other structures and, therefore, will have a distinguishable response (e.g., complex impedance, resistance, etc.) with respect to a selected frequency than sympathetic nerves. Accordingly, applying signals with different frequencies to the target site can distinguish the targeted parasympathetic nerves from the non-targeted sensory nerves, and therefore provide highly specific target sites for neural mapping before or after therapy and/or neural evaluation post-therapy.

Aerin Exhibit 1011, Page 460 of 2183
Aerin Medical Inc. v. Neurent Medical Ltd.
IPR2025-01126

In some embodiments, the neural and/or anatomical mapping includes measuring data at a region of interest with at least two different frequencies to identify certain anatomical structures such that the measurements are taken first based on a response to an injection signal having a first frequency and then again based on an injection signal having a second frequency different from the first. For example, there are two frequencies at which hypertrophied (i.e., disease-state characteristics) sub-mucosal targets have a different electrical conductivity or permittivity compared to "normal" (i.e., healthy) tissue. Complex conductivity may be determined based on one or more measured physiological parameters (e.g., complex impedance, resistance, dielectric measurements, dipole measurements, etc.) and/or observance of one or more confidently known attributes or signatures. Furthermore, the system 100 can also apply neuromodulation energy via the electrodes 244 at one or more predetermined frequencies attuned to a target neural structure to provide highly targeted ablation of the selected neural structure associated with the frequency(ies). This highly targeted neuromodulation also reduces the collateral effects of neuromodulation therapy to non-target sites/structures (e.g., blood vessels) because the targeted signal (having a frequency tuned to a target neural structure) will not have the same modulating effects on the non-target structures.

Accordingly, passive bioelectric properties, such as complex impedance and resistance, can be used by the system 100 before, during, and/or after neuromodulation therapy to guide one or more treatment parameters. For example, before, during, and/or after treatment, impedance or resistance measurements may be used to confirm and/or detect contact between one or more electrodes 244 and the adjacent tissue. The impedance or resistance measurements can also be used to detect whether the electrodes 244 are placed appropriately with respect to the targeted tissue type by determining whether the recorded spectra have a shape consistent with the expected tissue types and/or whether serially collected spectra were reproducible. In some embodiments, impedance or resistance measurements may be used to identify a boundary for the treatment zone (e.g., specific neural tissue that are to be disrupted), anatomical landmarks, anatomical structures to avoid (e.g., vascular structures or neural tissue that should not be disrupted), and other aspects of delivering energy to tissue.

The bioelectric information can be used to produce a spectral profile or map of the different anatomical features tissues at the target site, and the anatomical mapping can be visualized in a 3D or 2D image via the display 112 and/or other user interface to guide the

Aerin Exhibit 1011, Page 461 of 2183
Aerin Medical Inc. v. Neurent Medical Ltd.
IPR2025-01126

selection of a suitable treatment site. This neural and anatomical mapping allows the system 100 to accurately detect and therapeutically modulate neural fibers associated with certain neurological conditions or disorders to be treated. In addition, anatomical mapping also allows the clinician to identify certain structures that the clinician may wish to avoid during therapeutic neural modulation (e.g., certain arteries). The neural and anatomical bioelectric properties detected by the system 100 can also be used during and after treatment to determine the real-time effect of the therapeutic neuromodulation on the treatment site. For example, the evaluation/feedback algorithms 110 can also compare the detected neural locations and/or activity before and after therapeutic neuromodulation, and compare the change in neural activity to a predetermined threshold to assess whether the application of therapeutic neuromodulation was effective across the treatment site.

FIG. 9B is a block diagram illustrating communication of sensor data from the handheld device 102 to the controller and subsequent determination, via the controller, of a treatment pattern for controlling delivery of energy at a specific level for a specific period of time to the tissue of interest (i.e., the targeted tissue) sufficient to ensure successful ablation/modulation of the targeted tissue while minimizing and/or preventing collateral damage to surrounding or adjacent non-targeted tissue at the target site. As shown, the end effector 214 communicates the tissue data (i.e., bioelectric properties of tissue at the target site) to the console 104. The bioelectric properties may include, but are not limited to, complex impedance, resistance, reactance, capacitance, inductance, permittivity, conductivity, dielectric properties, muscle or nerve firing voltage, muscle or nerve firing current, depolarization, hyperpolarization, magnetic field, induced electromotive force, and combinations thereof. The dielectric properties may include, for example, at least a complex relative dielectric permittivity.

In turn, console 104 (via the controller 107, monitoring system 108, and evaluation/feedback algorithms 110) is configured to process such data and determine a type of tissue at the target site. The console 104 (via the controller 107, monitoring system 108, and evaluation/feedback algorithms 110) is further configured to determine a treatment pattern to be delivered by one or more of the plurality of electrodes of the end effector based, at least in part, on identified tissues. The treatment pattern (also referred to herein as "ablation pattern"), may include various parameters associated with the delivery of energy, including, for example, a predetermined treatment time, a precise level of energy to be delivered, and a predetermined

Aerin Exhibit 1011, Page 462 of 2183
Aerin Medical Inc. v. Neurent Medical Ltd.
IPR2025-01126

impedance threshold for that particular tissue. The console 104 (via the controller 107, monitoring system 108, and evaluation/feedback algorithms 110) is configured to tune energy output (i.e., delivery of electrical therapeutic stimulation) based on the treatment pattern of a tissue of interest such that the energy delivered is at a specific frequency for a predetermined period of time and up to a predetermined impedance threshold, such that energy delivery is targeted the tissue of interest while avoiding the non-targeted tissue.

It should be noted that, in some embodiments, the system 100 may include a database 400 containing a plurality of profiles 402(1)-402(n) of identified and known tissue types, wherein each profile may include electric signature data for the associated tissue type. The electric signature data may generally include previously identified bioelectric properties of the tissue type, including impedance profiles with known impedance threshold values associated with successful and unsuccessful ablation and/or modulation treatment of that particular tissue. Accordingly, the console 104 (via the controller 107, monitoring system 108, and evaluation/feedback algorithms 110) is configured to process data received from the end effector 114 (i.e., bioelectric properties of one or more tissues at the target site) and determine a type of tissue at the target site, and a treatment pattern for each of the one or more identified tissue types based on a comparison of the data with the electric signature data stored in each of the profiles 402. Upon a positive correlation between data sets, the console 104 is configured to identify a matching profile and thus determine the one or more tissue types at the target site and the respective treatment patterns of each.

FIG. 9C is a block diagram illustrating delivery of energy to the target site based on the treatment pattern output from the controller, monitoring of real-time feedback data associated with the targeted tissue undergoing treatment, and subsequent control over the delivery of energy based on the processing of the feedback data. Upon delivery energy from the electrodes to the targeted tissue (based on the treatment pattern), the device 102, via the electrodes/sensors (244, 252) is further configured to provide the console 104 with sensed data in the form of feedback data, in real-, or near-real, time. The real-time feedback data is associated with the effect of the therapeutic stimulation on the targeted tissue. For example, feedback data may be associated with efficacy of ablation upon targeted tissue (e.g., neural tissue) during and/or after delivery of initial energy from one or more of the plurality of electrodes. The console 104 (via the controller 107, monitoring system 108, and evaluation/feedback algorithms 110) is configured to process

Aerin Exhibit 1011, Page 463 of 2183
Aerin Medical Inc. v. Neurent Medical Ltd.
IPR2025-01126

such real-time feedback data to determine if certain properties of the targeted tissue undergoing treatment (e.g., tissue temperature, tissue impedance, etc.) reach predetermined thresholds for irreversible tissue damage.

More specifically, the console 104 (via the controller 107, monitoring system 108, and evaluation/feedback algorithms 110) is configured to automatically control delivery of energy to the targeted tissue based on the processing of the real-time feedback data, wherein such data includes at least impedance measurement data associated with the targeted tissue collected during delivery of energy to the targeted tissue. The console 104 (via the controller 107, monitoring system 108, and evaluation/feedback algorithms 110) is configured to process impedance measurement data to detect a slope change event (e.g., an asymptotic rise) within an impedance profile associated with the treatment, wherein, with reference to the predetermined impedance threshold, the slope change event is indicative of whether the ablation/modulation of the targeted tissue is successful. In turn, the controller 107 can automatically tune energy output individually for the one or more electrodes after an initial level of energy has been delivered based, at least in part, on monitoring and processing of the real-time feedback data, most notably impedance data, to ensure the desired ablation/modulation is achieved. For example, once a slope change event (e.g., an asymptotic rise) within an impedance profile is detected, with reference to the predetermined impedance threshold of the targeted tissue (which is known via the treatment pattern), the application of therapeutic neuromodulation energy can be terminated to allow the tissue to remain intact and to further prevent and/or minimize collateral damage to surrounding or adjacent non-targeted tissue. For example, in certain embodiments, the energy delivery can automatically be tuned based on an evaluation/feedback algorithm (e.g., the evaluation/feedback algorithm 110 of FIG. 1A) stored on a console (e.g., the console 104 of FIG. 1A) operably coupled to the end effector 214.

For example, in one embodiment, the console 104 (via the controller 107, monitoring system 108, and evaluation/feedback algorithms 110) is configured to process the impedance measurement data (received as part of the real-time feedback data) to calculate an active impedance value during delivery of energy from the one or more electrodes to the targeted tissue. In particular, the console 104 (via the controller 107, monitoring system 108, and evaluation/feedback algorithms 110) may be configured to process the active impedance value using an algorithm to determine efficacy of ablation/modulation of the targeted tissue based on a

Aerin Exhibit 1011, Page 464 of 2183
Aerin Medical Inc. v. Neurent Medical Ltd.
IPR2025-01126

comparison of the active impedance value with at least one of a predetermined minimum impedance value, a predetermined low terminal impedance value, and a predetermined high terminal impedance value. For example, the impedance values (i.e., predetermined minimum impedance value, predetermined low terminal impedance value, and predetermined high terminal impedance value) may range between approximately 100 ohms and 1 kohms. In the event that the active impedance value is less than the predetermined minimum impedance value, the console 104 is configured to determine that ablation/modulation is unsuccessful and then further disables energy delivery from the one or more electrodes. In the event that the active impedance value is greater than the predetermined minimum impedance value and greater than the predetermined low terminal impedance value, the console 104 is configured to calculate a slope change for the detection of a slope event. If a negative slope event is detected, the console 104 is configured to determine that ablation/modulation is successful and the controller disables energy delivery from the one or more electrodes upon detecting a negative slope event. If a negative slope event is not detected, the console 104 determines that ablation/modulation is unsuccessful and disables energy delivery from the one or more electrodes. In the absence of detecting a slope event, the console 104 is configured to determine that ablation/modulation is unsuccessful if the active impedance value is greater than the predetermined high terminal impedance value and the controller further disables energy delivery from the one or more electrodes.

The electrodes 244 are configured to be independently controlled and activated by the controller 107 (in conjunction with the evaluation/feedback algorithms 110) to thereby deliver energy independent of one another. Accordingly, the controller 107 can tune energy output individually for the one or more electrodes 244 after an initial level of energy has been delivered based, at least in part, on feedback data. For example, once the threshold is reached, the application of therapeutic stimulation energy can be terminated to allow the tissue to remain intact. In other embodiments, if the threshold has not been reached, the controller can maintain, reduce, or increase energy output to a given electrode 244 until such threshold is reached. Accordingly, the energy delivery of any given electrode 244 can automatically be tuned based on an evaluation/feedback algorithm (e.g., the evaluation/feedback algorithm 110 of FIG. 1A) stored on a console (e.g., the console 104 of FIG. 1A) operably coupled to the end effector 214. For example, at least some of the electrodes 244 may have different levels of energy to be

Aerin Exhibit 1011, Page 465 of 2183
Aerin Medical Inc. v. Neurent Medical Ltd.
IPR2025-01126

delivered at respective positions sufficient to ablate neural tissue at the respective positions based on the feedback data received for the respective locations.

The console 104 (via the controller 107, monitoring system 108, and evaluation/feedback algorithms 110) is further configured to transmit a signal resulting in an output, via interactive interface 112, of an alert to a user indicating a status of the efficacy of ablation/modulation of the targeted tissue. The alert may include, for example, a visual alert including at least one of a color and text displayed on a graphical user interface (GUI) and indicating whether the ablation/modulation is successful or unsuccessful, particularly with respect to respective sets of electrodes.

FIG. 10 is a flow diagram illustrating one embodiment of a method 500 for treating a condition. The condition may include, for example, a peripheral neurological condition of a patient. The method 500 includes providing a treatment device comprising an end effector including one or more electrodes and a controller operably associated with the treatment device (operation 510). The method 500 further includes positioning the end effector at a target site associated with a patient (operation 520) and determining, via the controller, a treatment pattern for controlling delivery of energy from the one or more electrodes to one or more tissues at a target site based, at least in part, on identifying data received from the device associated with the one or more tissues (operation 530).

The identifying data is associated with one or more properties of the one or more tissues, wherein the one or more properties may include, but are not limited to, a type of tissue, a depth of the one or more tissues, and a location of the one or more tissues. For example, a subset of the one or more electrodes may be configured to deliver non-therapeutic stimulating energy at a frequency/waveform to respective positions at the target site to thereby sense at least bioelectric properties of the one or more tissues at the target site. The bioelectric properties may include, but are not limited to, complex impedance, resistance, reactance, capacitance, inductance, permittivity, conductivity, dielectric properties, muscle or nerve firing voltage, muscle or nerve firing current, depolarization, hyperpolarization, magnetic field, and induced electromotive force.

The controller is generally configured to process the identifying data to determine the

Aerin Exhibit 1011, Page 466 of 2183
Aerin Medical Inc. v. Neurent Medical Ltd.
IPR2025-01126

treatment pattern. The processing of identifying data, via the controller, may include, for example comparing the identifying data received from the device with electric signature data associated with a plurality of known tissue types. The electric signature data, for example, may include at least bioelectric properties of known tissue types. The comparison may include correlating the identifying data received from the device with electric signature data from a supervised and/or an unsupervised trained neural network

The processing of the data may include, for example: a) comparing the data received from the device with electric signature data associated with a plurality of known tissue types; and (b) use of (i) a supervised and/or (ii) an unsupervised trained neural network. For example, the controller may be configured to compare the tissue data (i.e., data received from the treatment device associated with tissue at the target site) with profiles of known tissue types stored in a database, for example. Each profile may generally include electric signature data that generally characterizes a known tissue type, including previously identified physiological, histological, and bioelectric properties of a known tissue type, including impedance profiles with known impedance threshold values associated with successful and unsuccessful ablation and/or modulation treatment of that particular tissue.

The method 500 further includes receiving, from the device, and processing, via the controller, real-time feedback data associated with the one or more tissues upon supplying treatment energy to the one or more electrodes (operation 540). The method 500 further includes controlling, via the controller, supply of treatment energy to the one or more electrodes based on the processing of the real-time feedback data to ensure that the delivery of energy from the one or more electrodes is delivered at a level, and for a period of time, sufficient to ablate and/or modulate targeted tissue and minimize and/or prevent collateral damage to surrounding or adjacent non-targeted tissue at the target site (operation 550).

The treatment pattern may include, for example, a predetermined treatment time, a level of energy to be delivered from the electrodes, and a predetermined impedance threshold. Accordingly, the feedback data may include at least impedance measurement data associated with the targeted tissue at the target site. The controller may be configured to process the impedance measurement data to calculate an active impedance value during delivery of energy from the one or more electrodes to the targeted tissue. In particular, the controller may be configured to process the active impedance value using an algorithm to determine efficacy of

Aerin Exhibit 1011, Page 467 of 2183
Aerin Medical Inc. v. Neurent Medical Ltd.
IPR2025-01126

ablation/modulation of the targeted tissue based on a comparison of the active impedance value with at least one of a predetermined minimum impedance value, a predetermined low terminal impedance value, and a predetermined high terminal impedance value. In the event that the active impedance value is less than the predetermined minimum impedance value, the controller is configured to determine that ablation/modulation is unsuccessful and then further disables energy delivery from the one or more electrodes. In the event that the active impedance value is greater than the predetermined minimum impedance value and greater than the predetermined low terminal impedance value, the controller is configured to calculate a slope change for the detection of a slope event. If a negative slope event is detected, the controller is configured to determine that ablation/modulation is successful and the controller disables energy delivery from the one or more electrodes upon detecting a negative slope event. If a negative slope event is not detected, the controller determines that ablation/modulation is unsuccessful and disables energy delivery from the one or more electrodes. In the absence of detecting a slope event, the controller is configured to determine that ablation/modulation is unsuccessful if the active impedance value is greater than the predetermined high terminal impedance value and the controller further disables energy delivery from the one or more electrodes.

The controller is further configured to transmit a signal resulting in an output, via an interactive interface, of an alert to a user indicating a status of the efficacy of ablation/modulation of the targeted tissue. The alert may include, for example, a visual alert including at least one of a color and text displayed on a graphical user interface (GUI) and indicating whether the ablation/modulation is successful or unsuccessful.

In some embodiments, the condition includes a peripheral neurological condition. The peripheral neurological condition may be associated with a nasal condition or a non-nasal condition of the patient. For example, the non-nasal condition may include atrial fibrillation (AF). In some embodiments, the nasal condition may include rhinosinusitis. Accordingly, in some embodiments, the target site is within a sino-nasal cavity of the patient. The delivery of the ablation energy may result in disruption of multiple neural signals to, and/or result in local hypoxia of, mucus producing and/or mucosal engorgement elements within the sino-nasal cavity of the patient. The targeted tissue is proximate or inferior to a sphenopalatine foramen. Yet still, delivery of the ablation energy may result in therapeutic modulation of postganglionic parasympathetic nerves innervating nasal mucosa at foramina and or microforamina of a palatine

Aerin Exhibit 1011, Page 468 of 2183
Aerin Medical Inc. v. Neurent Medical Ltd.
IPR2025-01126

bone of the patient. In particular, delivery of the ablation energy causes multiple points of interruption of neural branches extending through foramina and microforamina of palatine bone. Yet still, in some embodiments, delivery of the ablation energy may cause thrombus formation within one or more blood vessels associated with mucus producing and/or mucosal engorgement elements within the nose. The resulting local hypoxia of the mucus producing and/or mucosal engorgement elements may result in decreased mucosal engorgement to thereby increase volumetric flow through a nasal passage of the patient. Additionally, or alternatively, the resulting local hypoxia may cause neuronal degeneration.

FIGS. 11A and 11B are graphs illustrating impedance profiles of two different sets of electrodes delivering energy to respective portions of targeted tissue, wherein the graphs illustrate a slope change event (e.g., asymptotic rise) which is indicative of whether the ablation/modulation of the targeted tissue is successful.

As previously described, systems and methods are further configured to receive and process real-time feedback data associated with the targeted tissue undergoing treatment to further ensure that energy delivered is maintained within the scope of the treatment pattern. More specifically, the systems and methods are configured to automatically control delivery of energy to the targeted tissue based on the processing of the real-time feedback data, wherein such data includes at least impedance measurement data associated with the targeted tissue collected during delivery of energy to the targeted tissue. The controller is configured to process impedance measurement data to detect a slope change event (e.g., an asymptotic rise) within an impedance profile associated with the treatment, wherein, with reference to the predetermined impedance threshold, the slope change event is indicative of whether the ablation/modulation of the targeted tissue is successful. In turn, the controller is configured to automatically control the delivery of energy to the targeted tissue based on real-time monitoring of feedback data, most notably impedance data, to ensure the desired ablation/modulation is achieved.

As a result, the systems and methods are able to ensure that optimal energy is delivered in order to delay the onset of impedance roll-off, until the target ablation/modulation depth is achieved, while maintaining clinically relevant treatment time. Accordingly, the invention solves the problem of causing unnecessary collateral damage to non-targeted tissue during a procedure involving the application of electrotherapeutic stimulation at a target site composed of a variety of tissue types.

Aerin Exhibit 1011, Page 469 of 2183
Aerin Medical Inc. v. Neurent Medical Ltd.
IPR2025-01126

The following provides a detailed description of the various capabilities of systems and methods of the present invention, including, but not limited to, neuromodulation monitoring, feedback, and mapping capabilities, which, in turn, allowing for detection of anatomical structures and function, neural identification and mapping, and anatomical mapping, for example.

Neuromodulation Monitoring, Feedback, and Mapping Capabilities

As previously described, the system 100 includes a console 104 to which the device 102 is to be connected. The console 104 is configured to provide various functions for the device 102, which may include, but is not limited to, controlling, monitoring, supplying, and/or otherwise supporting operation of the device 102. The console 104 can further be configured to generate a selected form and/or magnitude of energy for delivery to tissue or nerves at the target site via the end effector (214, 314), and therefore the console 104 may have different configurations depending on the treatment modality of the device 102. For example, when device 102 is configured for electrode-based, heat-element-based, and/or transducer-based treatment, the console 104 includes an energy generator 106 configured to generate RF energy (e.g., monopolar, bipolar, or multi-polar RF energy), pulsed electrical energy, microwave energy, optical energy, ultrasound energy (e.g., intraluminally-delivered ultrasound and/or HIFU), direct heat energy, radiation (e.g., infrared, visible, and/or gamma radiation), and/or another suitable type of energy. When the device 102 is configured for cryotherapeutic treatment, the console 104 can include a refrigerant reservoir (not shown), and can be configured to supply the device 102 with refrigerant. Similarly, when the device 102 is configured for chemical-based treatment (e.g., drug infusion), the console 104 can include a chemical reservoir (not shown) and can be configured to supply the device 102 with one or more chemicals.

In some embodiments, the console 104 may include a controller 107 communicatively coupled to the device 102. However, in the embodiments described herein, the controller 107 may generally be carried by and provided within the handle 118 of the device 102. The controller 107 is configured to initiate, terminate, and/or adjust operation of one or more electrodes provided by the end effector (214, 314) directly and/or via the console 104. For example, the controller 107 can be configured to execute an automated control algorithm and/or

Aerin Exhibit 1011, Page 470 of 2183
Aerin Medical Inc. v. Neurent Medical Ltd.
IPR2025-01126

to receive control instructions from an operator (e.g., surgeon or other medical professional or clinician). For example, the controller 107 and/or other components of the console 104 (e.g., processors, memory, etc.) can include a computer-readable medium carrying instructions, which when executed by the controller 107, causes the device 102 to perform certain functions (e.g., apply energy in a specific manner, detect impedance, detect temperature, detect nerve locations or anatomical structures, perform nerve mapping, etc.). A memory includes one or more of various hardware devices for volatile and non-volatile storage, and can include both read-only and writable memory. For example, a memory can comprise random access memory (RAM), CPU registers, read-only memory (ROM), and writable non-volatile memory, such as flash memory, hard drives, floppy disks, CDs, DVDs, magnetic storage devices, tape drives, device buffers, and so forth. A memory is not a propagating signal divorced from underlying hardware; a memory is thus non-transitory.

The console 104 may further be configured to provide feedback to an operator before, during, and/or after a treatment procedure via mapping/evaluation/feedback algorithms 110. For example, the mapping/evaluation/feedback algorithms 110 can be configured to provide information associated with the location of nerves at the treatment site, the location of other anatomical structures (e.g., vessels) at the treatment site, the temperature at the treatment site during monitoring and modulation, and/or the effect of the therapeutic neuromodulation on the nerves at the treatment site. In certain embodiments, the mapping/evaluation/feedback algorithm 110 can include features to confirm efficacy of the treatment and/or enhance the desired performance of the system 100. For example, the mapping/evaluation/feedback algorithm 110, in conjunction with the controller 107 and the end effector (214, 314), can be configured to monitor neural activity and/or temperature at the treatment site during therapy and automatically shut off the energy delivery when the neural activity and/or temperature reaches a predetermined threshold (e.g., a threshold reduction in neural activity, a threshold maximum temperature when applying RF energy, or a threshold minimum temperature when applying cryotherapy). In other embodiments, the mapping/evaluation/feedback algorithm 110, in conjunction with the controller 107, can be configured to automatically terminate treatment after a predetermined maximum time, a predetermined maximum impedance or resistance rise of the targeted tissue (i.e., in comparison to a baseline impedance measurement), a predetermined maximum impedance of the targeted tissue), and/or other threshold values for biomarkers associated with autonomic

Aerin Exhibit 1011, Page 471 of 2183
Aerin Medical Inc. v. Neurent Medical Ltd.
IPR2025-01126

function. This and other information associated with the operation of the system 100 can be communicated to the operator via a display 112 (e.g., a monitor, touchscreen, user interface, etc.) on the console 104 and/or a separate display (not shown) communicatively coupled to the console 104.

In various embodiments, the end effector (214, 314) and/or other portions of the system 100 can be configured to detect various bioelectric-parameters of the tissue at the target site, and this information can be used by the mapping/evaluation/feedback algorithms 110 to determine the anatomy at the target site (e.g., tissue types, tissue locations, vasculature, bone structures, foramen, sinuses, etc.), locate neural tissue, differentiate between different types of neural tissue, map the anatomical and/or neural structure at the target site, and/or identify neuromodulation patterns of the end effector (214, 314) with respect to the patient's anatomy. For example, the end effector (214, 314) can be used to detect resistance, complex electrical impedance, dielectric properties, temperature, and/or other properties that indicate the presence of neural fibers and/or other anatomical structures in the target region. In certain embodiments, the end effector (214, 314), together with the mapping/evaluation/feedback algorithms 110, can be used to determine resistance (rather than impedance) of the tissue (i.e., the load) to more accurately identify the characteristics of the tissue. The mapping/evaluation/feedback algorithms 110 can determine resistance of the tissue by detecting the actual power and current of the load (e.g., via the electrodes (244, 336)).

In some embodiments, the system 100 provides resistance measurements with a high degree of accuracy and a very high degree of precision, such as precision measurements to the hundredths of an Ohm (e.g., 0.01Ω) for the range of 1-2000Ω. The high degree of resistance detection accuracy provided by the system 100 allows for the detection sub-microscale structures and events, including the firing of neural tissue, differences between neural tissue and other anatomical structures (e.g., blood vessels), and event different types of neural tissue. This information can be analyzed by the mapping/evaluation/feedback algorithms and/or the controller 107 and communicated to the operator via a high resolution spatial grid (e.g., on the display 112) and/or other type of display to identify neural tissue and other anatomy at the treatment site and/or indicate predicted neuromodulation regions based on the ablation pattern with respect to the mapped anatomy.

As previously described, in certain embodiments, each electrode (244, 336) can be

Aerin Exhibit 1011, Page 472 of 2183
Aerin Medical Inc. v. Neurent Medical Ltd.
IPR2025-01126

operated independently of the other electrodes (244, 336). For example, each electrode can be individually activated and the polarity and amplitude of each electrode can be selected by an operator or a control algorithm executed by the controller 107. The selective independent control of the electrodes (244, 336) allows the end effector (214, 314) to detect information and deliver RF energy to highly customized regions. For example, a select portion of the electrodes (244, 336) can be activated to target specific neural fibers in a specific region while the other electrodes (244, 336) remain inactive. In certain embodiments, for example, electrodes (244, 336) may be activated across the portion of a strut that is adjacent to tissue at the target site, and the electrodes (244, 336) that are not proximate to the target tissue can remain inactive to avoid applying energy to non-target tissue. In addition, the electrodes (244, 336) can be individually activated to stimulate or therapeutically modulate certain regions in a specific pattern at different times (e.g., via multiplexing), which facilitates detection of anatomical parameters across a zone of interest and/or regulated therapeutic neuromodulation.

The electrodes (244, 336) can be electrically coupled to the energy generator 106 via wires (not shown) that extend from the electrodes (244, 336), through the shaft 116, and to the energy generator 106. When each of the electrodes (244, 336) is independently controlled, each electrode (244, 336) couples to a corresponding wire that extends through the shaft 116. This allows each electrode (244, 336) to be independently activated for stimulation or neuromodulation to provide precise ablation patterns and/or individually detected via the console 104 to provide information specific to each electrode (244, 336) for neural or anatomical detection and mapping. In other embodiments, multiple electrodes (244, 336) can be controlled together and, therefore, multiple electrodes (244, 336) can be electrically coupled to the same wire extending through the shaft 116. The energy generator 16 and/or components (e.g., a control module) operably coupled thereto can include custom algorithms to control the activation of the electrodes (244, 336). For example, the RF generator can deliver RF power at about 200-100 W to the electrodes (244, 336), and do so while activating the electrodes (244, 336) in a predetermined pattern selected based on the position of the end effector (214, 314) relative to the treatment site and/or the identified locations of the target nerves. In other embodiments, the energy generator 106 delivers power at lower levels (e.g., less than 1 W, 1-5 W, 5-15 W, 15-50 W, 50-150 W, etc.) for stimulation and/or higher power levels. For example, the energy generator 106 can be configured to delivery stimulating energy pulses of 1-3 W via the

Aerin Exhibit 1011, Page 473 of 2183
Aerin Medical Inc. v. Neurent Medical Ltd.
IPR2025-01126

electrodes (244, 336) to stimulate specific targets in the tissue.

As previously described, the end effector (214, 314) can further include one or more temperature sensors disposed on the struts and/or other portions of the end effector (214, 314) and electrically coupled to the console 104 via wires (not shown) that extend through the shaft 116. In various embodiments, the temperature sensors can be positioned proximate to the electrodes (244, 336) to detect the temperature at the interface between tissue at the target site and the electrodes (244, 336). In other embodiments, the temperature sensors can penetrate the tissue at the target site (e.g., a penetrating thermocouple) to detect the temperature at a depth within the tissue. The temperature measurements can provide the operator or the system with feedback regarding the effect of the therapeutic neuromodulation on the tissue. For example, in certain embodiments the operator may wish to prevent or reduce damage to the tissue at the treatment site, and therefore the temperature sensors can be used to determine if the tissue temperature reaches a predetermined threshold for irreversible tissue damage. Once the threshold is reached, the application of therapeutic neuromodulation energy can be terminated to allow the tissue to remain intact and avoid significant tissue sloughing during wound healing. In certain embodiments, the energy delivery can automatically terminate based on the mapping/evaluation/feedback algorithm 110 stored on the console 104 operably coupled to the temperature sensors.

In certain embodiments, the system 100 can determine the locations and/or morphology of neural tissue and/or other anatomical structures before therapy such that the therapeutic neuromodulation can be applied to precise regions including target neural tissue, while avoiding negative effects on non-target structures, such as blood vessels. As described in further detail below, the system 100 can detect various bioelectrical parameters in an interest zone to determine the location and morphology of various neural tissue (e.g., different types of neural tissue, neuronal directionality, etc.) and/or other tissue (e.g., glandular structures, vessels, bony regions, etc.). In some embodiments, the system 100 is configured to measure bioelectric potential. To do so, one or more of the electrodes (244, 336) is placed in contact with an epithelial surface at a region of interest (e.g., a treatment site). Electrical stimuli (e.g., constant or pulsed currents at one or more frequencies) are applied to the tissue by one or more electrodes (244, 336) at or near the treatment site, and the voltage and/or current differences at various different frequencies between various pairs of electrodes (244, 336) of the end effector (214,

Aerin Exhibit 1011, Page 474 of 2183
Aerin Medical Inc. v. Neurent Medical Ltd.
IPR2025-01126

314) may be measured to produce a spectral profile or map of the detected bioelectric potential, which can be used to identify different types of tissues (e.g., vessels, neural tissue, and/or other types of tissue) in the region of interest. For example, current (i.e., direct or alternating current) can be applied to a pair of electrodes (244, 336) adjacent to each other and the resultant voltages and/or currents between other pairs of adjacent electrodes (244, 336) are measured. It will be appreciated that the current injection electrodes (244, 336) and measurement electrodes (244, 336) need not be adjacent, and that modifying the spacing between the two current injection electrodes (244, 336) can affect the depth of the recorded signals. For example, closely-spaced current injection electrodes (244, 336) provided recorded signals associated with tissue deeper from the surface of the tissue than further spaced apart current injection electrodes (244, 336) that provide recorded signals associated with tissue at shallower depths. Recordings from electrode pairs with different spacings may be merged to provide additional information on depth and localization of anatomical structures.

Further, complex impedance and/or resistance measurements of the tissue at the region of interest can be detected directly from current-voltage data provided by the bioelectric measurements while differing levels of frequency currents are applied to the tissue (e.g., via the end effector (214, 314)), and this information can be used to map the neural and anatomical structures by the use of frequency differentiation reconstruction. Applying the stimuli at different frequencies will target different stratified layers or cellular bodies or clusters. At high signal frequencies (e.g., electrical injection or stimulation), for example, cell membranes of the neural tissue do not impede current flow, and the current passes directly through the cell membranes. In this case, the resultant measurement (e.g., impedance, resistance, capacitance, and/or induction) is a function of the intracellular and extracellular tissue and liquids, ions, proteins and polysaccharides. At low signal frequencies, the membranes impede current flow to provide different defining characteristics of the tissues, such as the shapes and morphologies of the cells or cell densities or cell spacing. The stimulation frequencies can be in the megabertz range, in the kilohertz range (e.g., 400-500 kHz, 450-480 kHz, etc.), and/or other frequencies attuned to the tissue being stimulated and the characteristics of the device being used. The detected complex impedance or resistances levels from the zone of interest can be displayed to the user (e.g., via the display 112) to visualize certain structures based on the stimulus frequency.

Aerin Exhibit 1011, Page 475 of 2183
Aerin Medical Inc. v. Neurent Medical Ltd.
IPR2025-01126

Further, the inherent morphology and composition of the anatomical structures in a given region or zone of the patient react differently to different frequencies and, therefore, specific frequencies can be selected to identify very specific structures. For example, the morphology or composition of targeted structures for anatomical mapping may depend on whether the cells of tissue or other structure are membranonic, stratified, and/or annular. In various embodiments, the applied stimulation signals can have predetermined frequencies attuned to specific neural tissue, such as the level of myelination and/or morphology of the myelination. For example, second axonal parasympathetic structures are poorly myelinated than sympathetic nerves or other structures and, therefore, will have a distinguishable response (e.g., complex impedance, resistance, etc.) with respect to a selected frequency than sympathetic nerves. Accordingly, applying signals with different frequencies to the target site can distinguish the targeted parasympathetic nerves from the non-targeted sensory nerves, and therefore provide highly specific target sites for neural mapping before or after therapy and/or neural evaluation post-therapy. In some embodiments, the neural and/or anatomical mapping includes measuring data at a region of interest with at least two different frequencies to identify certain anatomical structures such that the measurements are taken first based on a response to an injection signal having a first frequency and then again based on an injection signal having a second frequency different from the first. For example, there are two frequencies at which hypertrophied (i.e., disease-state characteristics) sub-mucosal targets have a different electrical conductivity or permittivity compared to "normal" (i.e., healthy) tissue. Complex conductivity may be determined based on one or more measured physiological parameters (e.g., complex impedance, resistance, dielectric measurements, dipole measurements, etc.) and/or observance of one or more confidently known attributes or signatures. Furthermore, the system 100 can also apply neuromodulation energy via the electrodes (244, 336) at one or more predetermined frequencies attuned to a target neural structure to provide highly targeted ablation of the selected neural structure associated with the frequency(ies). This highly targeted neuromodulation also reduces the collateral effects of neuromodulation therapy to non-target sites/structures (e.g., blood vessels) because the targeted signal (having a frequency tuned to a target neural structure) will not have the same modulating effects on the non-target structures.

Accordingly, bioelectric properties, such as complex impedance and resistance, can be used by the system 100 before, during, and/or after neuromodulation therapy to guide one or

Aerin Exhibit 1011, Page 476 of 2183
Aerin Medical Inc. v. Neurent Medical Ltd.
IPR2025-01126

more treatment parameters. For example, before, during, and/or after treatment, impedance or resistance measurements may be used to confirm and/or detect contact between one or more electrodes (244, 336) and the adjacent tissue. The impedance or resistance measurements can also be used to detect whether the electrodes (244, 336) are placed appropriately with respect to the targeted tissue type by determining whether the recorded spectra have a shape consistent with the expected tissue types and/or whether serially collected spectra were reproducible. In some embodiments, impedance or resistance measurements may be used to identify a boundary for the treatment zone (e.g., specific neural tissue that are to be disrupted), anatomical landmarks, anatomical structures to avoid (e.g., vascular structures or neural tissue that should not be disrupted), and other aspects of delivering energy to tissue.

The bioelectric information can be used to produce a spectral profile or map of the different anatomical features tissues at the target site, and the anatomical mapping can be visualized in a 3D or 2D image via the display 112 and/or other user interface to guide the selection of a suitable treatment site. This neural and anatomical mapping allows the system 100 to accurately detect and therapeutically modulate the postganglionic parasympathetic neural fibers that innervate the mucosa at numerous neural entrance points within a given zone or region of a patient. Further, because there are not any clear anatomical markers denoting the location of the SPF, accessory foramen, and microforamina, the neural mapping allows the operator to identify and therapeutically modulate nerves that would otherwise be unidentifiable without intricate dissection of the mucosa. In addition, anatomical mapping also allows the clinician to identify certain structures that the clinician may wish to avoid during therapeutic neural modulation (e.g., certain arteries). The neural and anatomical bioelectric properties detected by the system 100 can also be used during and after treatment to determine the real-time effect of the therapeutic neuromodulation on the treatment site. For example, the mapping/evaluation/feedback algorithms 110 can also compare the detected neural locations and/or activity before and after therapeutic neuromodulation, and compare the change in neural activity to a predetermined threshold to assess whether the application of therapeutic neuromodulation was effective across the treatment site.

In various embodiments, the system 100 can also be configured to map the expected therapeutic modulation patterns of the electrodes (244, 336) at specific temperatures and, in certain embodiments, take into account tissue properties based on the anatomical mapping of the

Aerin Exhibit 1011, Page 477 of 2183
Aerin Medical Inc. v. Neurent Medical Ltd.
IPR2025-01126

target site. For example, the system 100 can be configured to map the ablation pattern of a specific electrode ablation pattern at the 45° C. isotherm, the 55° C. isotherm, the 65° C. isotherm, and/or other temperature/ranges (e.g., temperatures ranging from 45° C. to 70° C. or higher) depending on the target site and/or structure.

The system 100 may provide, via the display 112, three-dimensional views of such projected ablation patterns of the electrodes (244, 336) of the end effector (214, 314). The ablation pattern mapping may define a region of influence that each electrode (244, 336) has on the surrounding tissue. The region of influence may correspond to the region of tissue that would be exposed to therapeutically modulating energy based on a defined electrode activation pattern (i.e., one, two, three, four, or more electrodes on any given strut). In other words, the ablation pattern mapping can be used to illustrate the ablation pattern of any number of electrodes (244, 336), any geometry of the electrode layout, and/or any ablation activation protocol (e.g., pulsed activation, multi-polar/sequential activation, etc.).

In some embodiments, the ablation pattern may be configured such that each electrode (244, 336) has a region of influence surrounding only the individual electrode (244, 336) (i.e., a "dot" pattern). In other embodiments, the ablation pattern may be such that two or more electrodes (244, 336) may link together to form a sub-grouped regions of influence that define peanut-like or linear shapes between two or more electrodes (244, 336). In further embodiments, the ablation pattern can result in a more expansive or contiguous pattern in which the region of influence extends along multiple electrodes (244, 336) (e.g., along each strut). In still further embodiments, the ablation pattern may result in different regions of influence depending upon the electrode activation pattern, phase angle, target temperature, pulse duration, device structure, and/or other treatment parameters. The three-dimensional views of the ablation patterns can be output to the display 112 and/or other user interfaces to allow the clinician to visualize the changing regions of influence based on different durations of energy application, different electrode activation sequences (e.g., multiplexing), different pulse sequences, different temperature isotherms, and/or other treatment parameters. This information can be used to determine the appropriate ablation algorithm for a patient's specific anatomy. In other embodiments, the three-dimensional visualization of the regions of influence can be used to illustrate the regions from which the electrodes (244, 336) detect data when measuring bioelectrical properties for anatomical mapping. In this embodiment, the three dimensional

Aerin Exhibit 1011, Page 478 of 2183
Aerin Medical Inc. v. Neurent Medical Ltd.
IPR2025-01126

visualization can be used to determine which electrode activation pattern should be used to determine the desired properties (e.g., impedance, resistance, etc.) in the desired area. In certain embodiments, it may be better to use dot assessments, whereas in other embodiments it may be more appropriate to detect information from linear or larger contiguous regions.

In some embodiments, the mapped ablation pattern is superimposed on the anatomical mapping to identify what structures (e.g., neural tissue, vessels, etc.) will be therapeutically modulated or otherwise affected by the therapy. An image may be provided to the surgeon which includes a digital illustration of a predicted or planned neuromodulation zone in relation to previously identified anatomical structures in a zone of interest. For example, the illustration may show numerous neural tissue and, based on the predicted neuromodulation zone, identifies which neural tissue are expected to be therapeutically modulated. The expected therapeutically modulated neural tissue may be shaded to differentiate them from the non-affected neural tissue. In other embodiments, the expected therapeutically modulated neural tissue can be differentiated from the non-affected neural tissue using different colors and/or other indicators. In further embodiments, the predicted neuromodulation zone and surrounding anatomy (based on anatomical mapping) can be shown in a three dimensional view (and/or include different visualization features (e.g., color-coding to identify certain anatomical structures, bioelectric properties of the target tissue, etc.). The combined predicted ablation pattern and anatomical mapping can be output to the display 112 and/or other user interfaces to allow the clinician to select the appropriate ablation algorithm for a patient's specific anatomy.

The imaging provided by the system 100 allows the clinician to visualize the ablation pattern before therapy and adjust the ablation pattern to target specific anatomical structures while avoiding others to prevent collateral effects. For example, the clinician can select a treatment pattern to avoid blood vessels, thereby reducing exposure of the vessel to the therapeutic neuromodulation energy. This reduces the risk of damaging or rupturing vessels and, therefore, prevents immediate or latent bleeding. Further, the selective energy application provided by the neural mapping reduces collateral effects of the therapeutic neuromodulation, such as tissue sloughing off during wound healing (e.g., 1-3 weeks post ablation), thereby reducing the aspiration risk associated with the neuromodulation procedure.

The system 100 can be further configured to apply neuromodulation energy (via the electrodes (244, 336)) at specific frequencies attuned to the target neural structure and, therefore,

Aerin Exhibit 1011, Page 479 of 2183
Aerin Medical Inc. v. Neurent Medical Ltd.
IPR2025-01126

specifically target desired neural tissue over non-target structures. For example, the specific neuromodulation frequencies can correspond to the frequencies identified as corresponding to the target structure during neural mapping. As described above, the inherent morphology and composition of the anatomical structures react differently to different frequencies. Thus, frequency-tuned neuromodulation energy tailored to a target structure does not have the same modulating effects on non-target structures. More specifically, applying the neuromodulation energy at the target-specific frequency causes ionic agitation in the target neural structure, leading to differentials in osmotic potentials of the targeted neural tissue and dynamic changes in neuronal membronic potentials (resulting from the difference in intra-cellular and extra-cellular fluidic pressure). This causes degeneration, possibly resulting in vacuolar degeneration and, eventually, necrosis at the target neural structure, but is not expected to functionally affect at least some non-target structures (e.g., blood vessels). Accordingly, the system 100 can use the neural-structure specific frequencies to both (1) identify the locations of target neural tissue to plan electrode ablation configurations (e.g., electrode geometry and/or activation pattern) that specifically focus the neuromodulation on the target neural structure; and (2) apply the neuromodulation energy at the characteristic neural frequencies to selectively ablate the neural tissue responsive to the characteristic neural frequencies. For example, the end effector (214, 314) of the system 100 may selectively stimulate and/or modulate parasympathetic fibers, sympathetic fibers, sensory fibers, alpha/beta/delta fibers, C-fibers, anoxic terminals of one or more of the foregoing, insulated over non-insulated fibers (regions with fibers), and/or other neural tissue. In some embodiments, the system 100 may also selectively target specific cells or cellular regions during anatomical mapping and/or therapeutic modulation, such as smooth muscle cells, sub-mucosal glands, goblet cells, and stratified cellular regions within a given tissue type. Therefore, the system 100 provides highly selective neuromodulation therapy specific to targeted neural tissue, and reduces the collateral effects of neuromodulation therapy to non-target structures (e.g., blood vessels).

The present disclosure provides a method of anatomical mapping and therapeutic neuromodulation. The method includes expanding an end effector (i.e., end effector (214, 314)) at a zone of interest ("interest zone"). For example, the end effector (214, 314) can be expanded such that at least some of the electrodes (244, 336) are placed in contact with tissue at the interest zone. The expanded device can then take bioelectric measurements via the electrodes (244, 336)

Aerin Exhibit 1011, Page 480 of 2183
Aerin Medical Inc. v. Neurent Medical Ltd.
IPR2025-01126

and/or other sensors to ensure that the desired electrodes are in proper contact with the tissue at the interest zone. In some embodiments, for example, the system 100 detects the impedance and/or resistance across pairs of the electrodes (244, 336) to confirm that the desired electrodes have appropriate surface contact with the tissue and that all of the electrodes are (244, 336) functioning properly.

The method continues by optionally applying an electrical stimulus to the tissue, and detecting bioelectric properties of the tissue to establish baseline norms of the tissue. For example, the method can include measuring resistance, complex impedance, current, voltage, nerve firing rate, neuromagnetic field, muscular activation, and/or other parameters that are indicative of the location and/or function of neural tissue and/or other anatomical structures (e.g., glandular structures, blood vessels, etc.). In some embodiments, the electrodes (244, 336) send one or more stimulation signals (e.g., pulsed signals or constant signals) to the interest zone to stimulate neural activity and initiate action potentials. The stimulation signal can have a frequency attuned to a specific target structure (e.g., a specific neural structure, a glandular structure, a vessel) that allows for identification of the location of the specific target structure. The specific frequency of the stimulation signal is a function of the host permeability and, therefore, applying the unique frequency alters the tissue attenuation and the depth into the tissue the RF energy will penetrate. For example, lower frequencies typically penetrate deeper into the tissue than higher frequencies.

Pairs of the non-stimulating electrodes (244, 336) of the end effector (214, 314) can then detect one or more bioelectric properties of the tissue that occur in response to the stimulus, such as impedance or resistance. For example, an array of electrodes (e.g., the electrodes (244, 336)) can be selectively paired together in a desired pattern (e.g., multiplexing the electrodes (244, 336)) to detect the bioelectric properties at desired depths and/or across desired regions to provide a high level of spatial awareness at the interest zone. In certain embodiments, the electrodes (244, 336) can be paired together in a time-sequenced manner according to an algorithm (e.g., provided by the mapping/evaluation/feedback algorithms 110). In various embodiments, stimuli can be injected into the tissue at two or more different frequencies, and the resultant bioelectric responses (e.g., action potentials) in response to each of the injected frequencies can be detected via various pairs of the electrodes (244, 336). For example, an anatomical or neural mapping algorithm can cause the end effector (214, 314) to deliver pulsed

Aerin Exhibit 1011, Page 481 of 2183
Aerin Medical Inc. v. Neurent Medical Ltd.
IPR2025-01126

RF energy at specific frequencies between different pairs of the electrodes (244, 336) and the resultant bioelectric response can be recorded in a time sequenced rotation until the desired interest zone is adequately mapped (i.e., "multiplexing"). For example, the end effector (214, 314) can deliver stimulation energy at a first frequency via adjacent pairs of the electrodes (244, 336) for a predetermined time period (e.g., 1-50 milliseconds), and the resultant bioelectric activity (e.g., resistance) can be detected via one or more other pairs of electrodes (244, 336) (e.g., spaced apart from each other to reach varying depths within the tissue). The end effector (214, 314) can then apply stimulation energy at a second frequency different from the first frequency, and the resultant bioelectric activity can be detected via the other electrodes. This can continue when the interest zone has been adequately mapped at the desired frequencies. As described in further detail below, in some embodiments the baseline tissue bioelectric properties (e.g., nerve firing rate) are detected using static detection methods (without the injection of a stimulation signal).

After detecting the baseline bioelectric properties, the information can be used to map anatomical structures and/or functions at the interest zone. For example, the bioelectric properties detected by the electrodes (244, 336) can be amazed via the mapping/evaluation/feedback algorithms 110, and an anatomical map can be output to a user via the display 112. In some embodiments, complex impedance, dielectric, or resistance measurements can be used to map parasympathetic nerves and, optionally, identify neural tissue in a diseased state of hyperactivity. The bioelectric properties can also be used to map other non-target structures and the general anatomy, such as blood vessels, bone, and/or glandular structures. The anatomical locations can be provided to a user (e.g., on the display 112) as a two-dimensional map (e.g., illustrating relative intensities, illustrating specific sites of potential target structures) and/or as a three-dimensional image. This information can be used to differentiate structures on a submicron, cellular level and identify very specific target structures (e.g., hyperactive parasympathetic nerves). The method can also predict the ablation patterns of the end effector (214, 314) based on different electrode neuromodulation protocol and, optionally, superimpose the predicted neuromodulation patterns onto the mapped anatomy to indicate to the user which anatomical structures will be affected by a specific neuromodulation protocol. For example, when the predicted neuromodulation pattern is displayed in relation to the mapped anatomy, a clinician can determine whether target structures will be appropriately

Aerin Exhibit 1011, Page 482 of 2183
Aerin Medical Inc. v. Neurent Medical Ltd.
IPR2025-01126

ablated and whether non-target structures (e.g., blood vessels) will be undesirably exposed to the therapeutic neuromodulation energy. Thus, the method can be used for planning neuromodulation therapy to locate very specific target structures, avoid non-target structures, and select electrode neuromodulation protocols.

Once the target structure is located and a desired electrode neuromodulation protocol has been selected, the method continues by applying therapeutic neuromodulation to the target structure. The neuromodulation energy can be applied to the tissue in a highly targeted manner that forms micro-lesions to selectively modulate the target structure, while avoiding non-targeted blood vessels and allowing the surrounding tissue structure to remain healthy for effective wound healing. In some embodiments, the neuromodulation energy can be applied in a pulsed manner, allowing the tissue to cool between modulation pulses to ensure appropriate modulation without undesirably affecting non-target tissue. In some embodiments, the neuromodulation algorithm can deliver pulsed RF energy between different pairs of the electrodes (244, 336) in a time sequenced rotation until neuromodulation is predicted to be complete (i.e., "multiplexing"). For example, the end effector (214, 314) can deliver neuromodulation energy (e.g., having a power of 5-10 W (e.g., 7 W, 8 W, 9 W) and a current of about 50-100 mA) via adjacent pairs of the electrodes (244, 336) until at least one of the following conditions is met: (a) load resistance reaches a predefined maximum resistance (e.g., 350Ω); (b) a thermocouple temperature associated with the electrode pair reaches a predefined maximum temperature (e.g., 80° C.); or (c) a predetermined time period has elapsed (e.g., 10 seconds). After the predetermined conditions are met, the end effector (214, 314) can move to the next pair of electrodes in the sequence, and the neuromodulation algorithm can terminate when all of the load resistances of the individual pairs of electrodes is at or above a predetermined threshold (e.g., 100Ω). In various embodiments, the RF energy can be applied at a predetermined frequency (e.g., 450-500 kHz) and is expected to initiate ionic agitation of the specific target structure, while avoiding functional disruption of non-target structures.

During and/or after neuromodulation therapy, the method continues by detecting and, optionally, mapping the post-therapy bioelectric properties of the target site. This can be performed in a similar manner as described above. The post-therapy evaluation can indicate if the target structures (e.g., hyperactive parasympathetic nerves) were adequately modulated or ablated. If the target structures are not adequately modulated (i.e., if neural activity is still

Aerin Exhibit 1011, Page 483 of 2183
Aerin Medical Inc. v. Neurent Medical Ltd.
IPR2025-01126

detected in the target structure and/or the neural activity has not decreased), the method can continue by again applying therapeutic neuromodulation to the target. If the target structures were adequately ablated, the neuromodulation procedure can be completed.

Detection of Anatomical Structures and Function

Various embodiments of the present technology can include features that measure bio-electric, dielectric, and/or other properties of tissue at target sites to determine the presence, location, and/or activity of neural tissue and other anatomical structures and, optionally, map the locations of the detected neural tissue and/or other anatomical structures. For example, the present technology can be used to detect glandular structures and, optionally, their mucoserous functions and/or other functions. The present technology can also be configured to detect vascular structures (e.g., arteries) and, optionally, their arterial functions, volumetric pressures, and/or other functions. The mapping features discussed below can be incorporated into any the system 100 and/or any other devices disclosed herein to provide an accurate depiction of nerves at the target site.

Neural and/or anatomical detection can occur (a) before the application of a therapeutic neuromodulation energy to determine the presence or location of neural tissue and other anatomical structures (e.g., blood vessels, glands, etc.) at the target site and/or record baseline levels of neural activity; (b) during therapeutic neuromodulation to determine the real-time effect of the energy application on the neural fibers at the treatment site; and/or (c) after therapeutic neuromodulation to confirm the efficacy of the treatment on the targeted structures (e.g., nerves glands, etc.). This allows for the identification of very specific anatomical structures (even to the micro-scale or cellular level) and, therefore, provides for highly targeted neuromodulation. This enhances the efficacy and efficiency of the neuromodulation therapy. In addition, the anatomical mapping reduces the collateral effects of neuromodulation therapy to non-target sites. Accordingly, the targeted neuromodulation inhibits damage or rupture of blood vessels (i.e., inhibits undesired bleeding) and collateral damage to tissue that may be of concern during wound healing (e.g., when damaged tissue sloughs off).

In certain embodiments, the systems disclosed herein can use bioelectric measurements, such as impedance, resistance, voltage, current density, and/or other parameters (e.g., temperature) to determine the anatomy, in particular the neural, glandular, and vascular anatomy,

Aerin Exhibit 1011, Page 484 of 2183
Aerin Medical Inc. v. Neurent Medical Ltd.
IPR2025-01126

at the target site. The bioelectric properties can be detected after the transmission of a stimulus (e.g., an electrical stimulus, such as RF energy delivered via the electrodes (244, 336); i.e., "dynamic" detection) and/or without the transmission of a stimulus (i.e., "static" detection).

Dynamic measurements include various embodiments to excite and/or detect primary or secondary effects of neural activation and/or propagation. Such dynamic embodiments involve the heightened states of neural activation and propagation and use this dynamic measurement for nerve location and functional identification relative to the neighboring tissue types. For example, a method of dynamic detection can include: (1) delivering stimulation energy to a treatment site via a treatment device (e.g., the end effector) to excite parasympathetic nerves at the treatment site; (2) measuring one or more physiological parameters (e.g., resistance, impedance, etc.) at the treatment site via a measuring/sensing array of the treatment device (e.g., the electrodes (244, 336)); (4) based on the measurements, identifying the relative presence and position of parasympathetic nerves at the treatment site; and (5) delivering ablation energy to the identified parasympathetic nerves to block the detected para-sympathetic nerves.

Static measurements include various embodiments associated with specific native properties of the stratified or cellular composition at or near the treatment site. The static embodiments are directed to inherent biologic and electrical properties of tissue types at or near the treatment site, the stratified or cellular compositions at or near the treatment site, and contrasting both foregoing measurements with tissue types adjacent the treatment site (and that are not targeted for neuromodulation). This information can be used to localize specific targets (e.g., parasympathetic fibers) and non-targets (e.g., vessels, sensory nerves, etc.). For example, a method of static detection can include: (1) before ablation, utilizing a measuring/sensing array of a treatment device (e.g., the electrodes (244, 336)) to determine one or more baseline physiological parameters; (2) geometrically identifying inherent tissue properties within a region of interest based on the measured physiological parameters (e.g., resistance, impedance, etc.); (3) delivering ablation energy to one or more nerves within the region of via treatment device interest; (4) during the delivery of the ablation energy, determining one or more mid-procedure physiological parameters via the measuring/sensing array; and (5) after the delivery of ablation energy, determining one or more post-procedure physiological parameters via the measurement/sensing array to determine the effectiveness of the delivery of the ablation energy on blocking the nerves that received the ablation energy.

Aerin Exhibit 1011, Page 485 of 2183
Aerin Medical Inc. v. Neurent Medical Ltd.
IPR2025-01126

After the initial static and/or dynamic detection of bioelectric properties, the location of anatomical features can be used to determine where the treatment site(s) should be with respect to various anatomical structures for therapeutically effective neuromodulation of the targeted nerves. The bioelectric and other physiological properties described herein can be detected via electrodes (e.g., the electrodes (244, 336) of the end effector (214, 314)), and the electrode pairings on a device (e.g., end effector (214, 314)) can be selected to obtain the bioelectric data at specific zones or regions and at specific depths of the targeted regions. The specific properties detected at or surrounding target neuromodulation sites and associated methods for obtaining these properties are described below. These specific detection and mapping methods discussed below are described with reference to the system 100 , although the methods can be implemented on other suitable systems and devices that provide for anatomical identification, anatomical mapping and/or neuromodulation therapy.

Neural Identification and Mapping

In many neuromodulation procedures, it is beneficial to identify the portions of the nerves that fall within a zone and/or region of influence (referred to as the "interest zone") of the energy delivered by a device 102, as well as the relative three-dimensional position of the neural tissue relative to the device 102. Characterizing the portions of the neural tissue within the interest zone and/or determining the relative positions of the neural tissue within the interest zone enables the clinician to (1) selectively activate target neural tissue over non-target structures (e.g., blood vessels), and (2) sub-select specific targeted neural tissue (e.g., parasympathetic nerves) over non-target neural tissue (e.g., sensory nerves, subgroups of neural tissue, neural tissue having certain compositions or morphologies) The target structures (e.g., parasympathetic nerves) and non-target structures (e.g., blood vessels, sensory nerves, etc.) can be identified based on the inherent signatures of specific structures, which are defined by the unique morphological compositions of the structures and the bioelectrical properties associated with these morphological compositions. For example, unique, discrete frequencies can be associated with morphological compositions and, therefore, be used to identify certain structures. The target and non-target structures can also be identified based on relative bioelectrical activation of the structures to sub-select specific neural structures. Further, target and non-target structures can be identified by the differing detected responses of the structures to a tailored

Aerin Exhibit 1011, Page 486 of 2183
Aerin Medical Inc. v. Neurent Medical Ltd.
IPR2025-01126

injected stimuli. For example, the systems described herein can detect the magnitude of response of structures and the difference in the responses of anatomical structures with respect to differing stimuli (e.g., stimuli injected at different frequencies).

At least for purposes of this disclosure, a nerve can include the following portions that are defined based on their respective orientations relative to the interest zone: terminating neural tissue (e.g., terminating axonal structures), branching neural tissue (e.g., branching axonal structures), and travelling neural tissue (e.g., travelling axonal structures). For example, terminating neural tissue enter the zone but do not exit. As such, terminating neural tissue are terminal points for neuronal signaling and activation. Branching neural tissue are nerves that enter the interest zone and increase number of nerves exiting the interest zone. Branching neural tissue are typically associated with a reduction in relative geometry of nerve bundle. Travelling neural tissue are nerves that enter the interest zone and exit the zone with no substantially no change in geometry or numerical value.

The system 100 can be used to detect voltage, current, complex impedance, resistance, permittivity, and/or conductivity, which are tied to the compound action potentials of nerves, to determine and/or map the relative positions and proportionalities of nerves in the interest zone. Neuronal cross-sectional area ("CSA") is expected to be due to the increase in axonic structures. Each axon is a standard size. Larger nerves (in cross-sectional dimension) have a larger number of axons than nerves having smaller cross-sectional dimensions. The compound action responses from the larger nerves, in both static and dynamic assessments, are greater than smaller nerves. This is at least in part because the compound action potential is the cumulative action response from each of the axons. When using static analysis, for example, the system 100 can directly measure and map impedance or resistance of nerves and, based on the determined impedance or resistance, determine the location of nerves and/or relative size of the nerves. In dynamic analysis, the system 100 can be used to apply a stimulus to the interest zone and detect the dynamic response of the neural tissue to the stimulus. Using this information, the system 100 can determine and/or map impedance or resistance in the interest zone to provide information related to the neural positions or relative nerve sizes. Neural impedance mapping can be illustrated by showing the varying complex impedance levels at a specific location at differing cross-sectional depths. In other embodiments, neural impedance or resistance can be mapped in a three-dimensional display.

Aerin Exhibit 1011, Page 487 of 2183
Aerin Medical Inc. v. Neurent Medical Ltd.
IPR2025-01126

Identifying the portions and/or relative positions of the nerves within the interest zone can inform and/or guide selection of one or more treatment parameters (e.g., electrode ablation patterns, electrode activation plans, etc.) of the system 100 for improving treatment efficiency and efficacy. For example, during neural monitoring and mapping, the system 100 can identify the directionality of the nerves based at least in part on the length of the neural structure extending along the interest zone, relative sizing of the neural tissue, and/or the direction of the action potentials. This information can then be used by the system 100 or the clinician to automatically or manually adjust treatment parameters (e.g., selective electrode activation, bipolar and/or multipolar activation, and/or electrode positioning) to target specific nerves or regions of nerves. For example, the system 100 can selectively activate specific electrodes (244, 336), electrode combinations (e.g., asymmetric or symmetric), and/or adjust the bi-polar or multi-polar electrode configuration. In some embodiments, the system 100 can adjust or select the waveform, phase angle, and/or other energy delivery parameters based on the nerve portion/position mapping and/or the nerve proportionality mapping. In some embodiments, structure and/or properties of the electrodes (244, 336) themselves (e.g., material, surface roughening, coatings, cross-sectional area, perimeter, penetrating, penetration depth, surface-mounted, etc.) may be selected based on the nerve portion and proportionality mapping.

In various embodiments, treatment parameters and/or energy delivery parameters can be adjusted to target on-axis or near axis travelling neural tissue and/or avoid the activation of traveling neural tissue that are at least generally perpendicular to the end effector (214, 314). Greater portions of the on-axis or near axis travelling neural tissue are exposed and susceptible to the neuromodulation energy provided by the end effector (214, 314) than a perpendicular travelling neural structure, which may only be exposed to therapeutic energy at a discrete cross-section. Therefore, the end effector (214, 314) is more likely to have a greater effect on the on-axis or near axis travelling neural tissue. The identification of the neural structure positions (e.g., via complex impedance or resistance mapping) can also allow targeted energy delivery to travelling neural tissue rather than branching neural tissue (typically downstream of the travelling neural tissue) because the travelling neural tissue are closer to the nerve origin and, therefore, more of the nerve is affected by therapeutic neuromodulation, thereby resulting in a more efficient treatment and/or a higher efficacy of treatment. Similarly, the identification of neural structure positions can be used to target travelling and branching neural tissue over

Aerin Exhibit 1011, Page 488 of 2183
Aerin Medical Inc. v. Neurent Medical Ltd.
IPR2025-01126

terminal neural tissue. In some embodiments, the treatment parameters can be adjusted based on the detected neural positions to provide a selective regional effect. For example, a clinician can target downstream portions of the neural tissue if only wanting to influence partial effects on very specific anatomical structures or positions.

In various embodiments, neural locations and/or relative positions of nerves can be determined by detecting the nerve-firing voltage and/or current over time. An array of the electrodes (244, 336) can be positioned in contact with tissue at the interest zone, and the electrodes (244, 336) can measure the voltage and/or current associated with nerve-firing. This information can optionally be mapped (e.g., on a display 112) to identify the location of nerves in a hyper state (i.e., excessive parasympathetic tone). Rhinitis is at least in part the result of over-firing nerves because this hyper state drives the hyper-mucosal production and hyper-mucosal secretion. Therefore, detection of nerve firing rate via voltage and current measurements can be used to locate the portions of the interest region that include hyper-parasympathetic neural function (i.e., nerves in the diseased state). This allows the clinician to locate specific nerves (i.e., nerves with excessive parasympathetic tone) before neuromodulation therapy, rather than simply targeting all parasympathetic nerves (including non-diseased state parasympathetic nerves) to ensure that the correct tissue is treated during neuromodulation therapy. Further, nerve firing rate can be detected during or after neuromodulation therapy so that the clinician can monitor changes in nerve firing rate to validate treatment efficacy. For example, recording decreases or elimination of nerve firing rate after neuromodulation therapy can indicate that the therapy was effective in therapeutically treating the hyper/diseased nerves.

In various embodiments, the system 100 can detect neural activity using dynamic activation by injecting a stimulus signal (i.e., a signal that temporarily activates nerves) via one or more of the electrodes (244, 336) to induce an action potential, and other pairs of electrodes (244, 336) can detect bioelectric properties of the neural response. Detecting neural tissue using dynamic activation involves detecting the locations of action potentials within the interest zone by measuring the discharge rate in neurons and the associated processes. The ability to numerically measure, profile, map, and/or image fast neuronal depolarization for generating an accurate index of activity is a factor in measuring the rate of discharge in neurons and their processes. The action potential causes a rapid increase in the voltage across nerve fiber and the electrical impulse then spreads along the fiber. As an action potential occurs, the conductance of

Aerin Exhibit 1011, Page 489 of 2183
Aerin Medical Inc. v. Neurent Medical Ltd.
IPR2025-01126

a neural cell membrane changes, becoming about 40 times larger than it is when the cell is at rest. During the action potential or neuronal depolarization, the membrane resistance diminishes by about 80 times, thereby allowing an applied current to enter the intracellular space as well. Over a population of neurons, this leads to a net decrease in the resistance during coherent neuronal activity, such as chronic para-sympathetic responses, as the intracellular space will provide additional conductive ions. The magnitude of such fast changes has been estimated to have local resistivity changes with recording near DC is 2.8-3.7% for peripheral nerve bundles.

Detecting neural tissue using dynamic activation includes detecting the locations of action potentials within the interest zone by measuring the discharge rate in neurons and the associated processes. The basis of each this discharge is the action potential, during which there is a depolarization of the neuronal membrane of up to 110 mV or more, lasting approximately 2 milliseconds, and due to the transfer of micromolar quantities of ions (e.g., sodium and potassium) across the cellular membrane. The complex impedance or resistance change due to the neuronal membrane falls from 1000 to 25 Ωcm. The introduction of a stimulus and subsequent measurement of the neural response can attenuate noise and improve signal to noise ratios to precisely focus on the response region to improve neural detection, measurement, and mapping.

In some embodiments, the difference in measurements of physiological parameters (e.g., complex impedance, resistance, voltage) over time, which can reduce errors, can be used to create a neural profiles, spectrums, or maps. For example, the sensitivity of the system 100 can be improved because this process provides repeated averaging to a stimulus. As a result, the mapping function outputs can be a unit-less ratio between the reference and test collated data at a single frequency and/or multiple frequencies and/or multiple amplitudes. Additional considerations may include multiple frequency evaluation methods that consequently expand the parameter assessments, such as resistivity, admittivity, center frequency, or ratio of extra- to intracellular resistivity.

In some embodiments, the system 100 may also be configured to indirectly measure the electrical activity of neural tissue to quantify the metabolic recovery processes that accompany action potential activity and act to restore ionic gradients to normal. These are related to an accumulation of ions in the extracellular space. The indirect measurement of electrical activity can be approximately a thousand times larger (in the order of millimolar), and thus are easier to

Aerin Exhibit 1011, Page 490 of 2183
Aerin Medical Inc. v. Neurent Medical Ltd.
IPR2025-01126

measure and can enhance the accuracy of the measured electrical properties used to generate the neural maps.

The system 100 can perform dynamic neural detection by detecting nerve-firing voltage and/or current and, optionally, nerve firing rate over time, in response to an external stimulation of the nerves. For example, an array of the electrodes (244, 336) can be positioned in contact with tissue at the interest zone, one or more of the electrodes (244, 336) can be activated to inject a signal into the tissue that stimulates the nerves, and other electrodes (244, 336) of the electrode array can measure the neural voltage and/or current due to nerve firing in response to the stimulus. This information can optionally be mapped (e.g., on a display 112) to identify the location of nerves and, in certain embodiments, identify parasympathetic nerves in a hyper state (e.g., indicative of Rhinitis or other diseased state). The dynamic detection of neural activity (voltage, current, firing rate, etc.) can be performed before neuromodulation therapy to detect target nerve locations to select the target site and treatment parameters to ensure that the correct tissue is treated during neuromodulation therapy. Further, dynamic detection of neural activity can be performed during or after neuromodulation therapy to allow the clinician to monitor changes in neural activity to validate treatment efficacy. For example, recording decreases or elimination of neural activity after neuromodulation therapy can indicate that the therapy was effective in therapeutically treating the hyper/diseased nerves.

In some embodiments, a stimulating signal can be delivered to the vicinity of the targeted nerve via one or more penetrating electrodes (e.g., microneedles that penetrate tissue) associated with the end effector (214, 314) and/or a separate device. The stimulating signal generates an action potential, which causes smooth muscle cells or other cells to contract. The location and strength of this contraction can be detected via the penetrating electrode(s) and, thereby, indicate to the clinician the distance to the nerve and/or the location of the nerve relative to the stimulating needle electrode. In some embodiments, the stimulating electrical signal may have a voltage of typically 1-2 mA or greater and a pulse width of typically 100-200 microseconds or greater. Shorter pulses of stimulation result in better discrimination of the detected contraction, but may require more current. The greater the distance between the electrode and the targeted nerve, the more energy is required to stimulate. The stimulation and detection of contraction strength and/or location enables identification of how close or far the electrodes are from the nerve, and therefore can be used to localize the nerve spatially. In some embodiments, varying

Aerin Exhibit 1011, Page 491 of 2183
Aerin Medical Inc. v. Neurent Medical Ltd.
IPR2025-01126

pulse widths may be used to measure the distance to the nerve. As the needle becomes closer to the nerve, the pulse duration required to elicit a response becomes less and less.

To localize nerves via muscle contraction detection, the system 100 can vary pulse-width or amplitude to vary the energy (Energy=pulse-width*amplitude) of the stimulus delivered to the tissue via the penetrating electrode(s). By varying the stimulus energy and monitoring muscle contraction via the penetrating electrodes and/or other type of sensor, the system 100 can estimate the distance to the nerve. If a large amount of energy is required to stimulate the nerve/contract the muscle, the stimulating/penetrating electrode is far from the nerve. As the stimulating/penetrating electrode, moves closer to the nerve, the amount of energy required to induce muscle contraction will drop. For example, an array of penetrating electrodes can be positioned in the tissue at the interest zone and one or more of the electrodes can be activated to apply stimulus at different energy levels until they induce muscle contraction. Using an iterative process, localize the nerve (e.g., via the mapping/evaluation/feedback algorithm 110).

In some embodiments, the system 100 can measure the muscular activation from the nerve stimulus (e.g., via the electrodes (244, 336)) to determine neural positioning for neural mapping, without the use of penetrating electrodes. In this embodiment, the treatment device targets the smooth muscle cells' varicosities surrounding the submucosal glands and the vascular supply, and then the compound muscle action potential. This can be used to summate voltage response from the individual muscle fiber action potentials. The shortest latency is the time from stimulus artifact to onset of the response. The corresponding amplitude is measured from baseline to negative peak and measured in millivolts (mV). Nerve latencies (mean±SD) in adults typically range about 2-6 milliseconds, and more typically from about 3.4±0.8 to about 4.0±0.5 milliseconds.

In some embodiments, the system 100 can record a neuromagnetic field outside of the nerves to determine the internal current of the nerves without physical disruption of the nerve membrane. Without being bound by theory, the contribution to the magnetic field from the current inside the membrane is two orders of magnitude larger than that from the external current, and that the contribution from current within the membrane is substantially negligible. Electrical stimulation of the nerve in tandem with measurements of the magnetic compound action fields ("CAFs") can yield sequential positions of the current dipoles such that the location of the conduction change can be estimated (e.g., via the least-squares method). Visual

Aerin Exhibit 1011, Page 492 of 2183
Aerin Medical Inc. v. Neurent Medical Ltd.
IPR2025-01126

representation (e.g., via the display 112) using magnetic contour maps can show normal or non-normal neural characteristics (e.g., normal can be equated with a characteristic quadrupolar pattern propagating along the nerve), and therefore indicate which nerves are in a diseases, hyperactive state and suitable targets for neuromodulation.

During magnetic field detection, an array of the electrodes (244, 336) can be positioned in contact with tissue at the interest zone and, optionally, one or more of the electrodes (244, 336) can be activated to inject an electrical stimulus into the tissue. As the nerves in the interest zone fire (either in response to a stimulus or in the absence of it), the nerve generates a magnetic field (e.g., similar to a current carrying wire), and therefore changing magnetic fields are indicative of the nerve nerve-firing rate. The changing magnetic field caused by neural firing can induce a current detected by nearby sensor wire (e.g., the sensor 314) and/or wires associated with the nearby electrodes (244, 336). By measuring this current, the magnetic field strength can be determined. The magnetic fields can optionally be mapped (e.g., on a display 112) to identify the location of nerves and select target nerves (nerves with excessive parasympathetic tone) before neuromodulation therapy to ensure that the desired nerves are treated during neuromodulation therapy. Further, the magnetic field information can be used during or after neuromodulation therapy so that the clinician can monitor changes in nerve firing rate to validate treatment efficacy.

In other embodiments, the neuromagnetic field is measured with a Hall Probe or other suitable device, which can be integrated into the end effector (214, 314) and/or part of a separate device delivered to the interest zone. Alternatively, rather than measuring the voltage in the second wire, the changing magnetic field can be measured in the original wire (i.e. the nerve) using a Hall probe. A current going through the Hall probe will be deflected in the semi-conductor. This will cause a voltage difference between the top and bottom portions, which can be measured. In some aspects of this embodiments, three orthogonal planes are utilized.

In some embodiments, the system 100 can be used to induce electromotive force ("EMF") in a wire (i.e., a frequency-selective circuit, such as a tunable/LC circuit) that is tunable to resonant frequency of a nerve. In this embodiment, the nerve can be considered to be a current carrying wire, and the firing action potential is a changing voltage. This causes a changing current which, in turn, causes a changing magnetic flux (i.e., the magnetic field that is perpendicular to the wire). Under Faraday's Law of Induction/Faraday's Principle, the changing

Aerin Exhibit 1011, Page 493 of 2183
Aerin Medical Inc. v. Neurent Medical Ltd.
IPR2025-01126

magnetic flux induces EMF (including a changing voltage) in a nearby sensor wire (e.g., integrated into the end effector (214, 314), the sensor 314, and/or other structure), and the changing voltage can be measured via the system 100.

In further embodiments, the sensor wire (e.g., the sensor 314) is an inductor and, therefore, provides an increase of the magnetic linkage between the nerve (i.e., first wire) and the sensor wire (i.e., second wire), with more turns for increasing effect. (e.g., V2,rms=V1,rms (N2/N1)). Due to the changing magnetic field, a voltage is induced in the sensor wire, and this voltage can be measured and used to estimate current changes in the nerve. Certain materials can be selected to enhance the efficiency of the EMF detection. For example, the sensor wire can include a soft iron core or other high permeability material for the inductor.

During induced EMF detection, the end effector (214, 314) and/or other device including a sensor wire is positioned in contact with tissue at the interest zone and, optionally, one or more of the electrodes (244, 336) can be activated to inject an electrical stimulus into the tissue. As the nerves in the interest zone fire (either in response to a stimulus or in the absence of it), the nerve generates a magnetic field (e.g., similar to a current carrying wire) that induces a current in the sensor wire (e.g., the sensor 314). This information can be used to determine neural location and/or map the nerves (e.g., on a display 112) to identify the location of nerves and select target nerves (nerves with excessive parasympathetic tone) before neuromodulation therapy to ensure that the desired nerves are treated during neuromodulation therapy. EMF information can also be used during or after neuromodulation therapy so that the clinician can monitor changes in nerve firing rate to validate treatment efficacy.

In some embodiments, the system 100 can detect magnetic fields and/or EMF generated at a selected frequency that corresponds to a particular type of nerve. The frequency and, by extension, the associated nerve type of the detected signal can be selected based on an external resonant circuit. Resonance occurs on the external circuit when it is matched to the frequency of the magnetic field of the particular nerve type and that nerve is firing. In manner, the system 100 can be used to locate a particular sub-group/type of nerves.

In some embodiments, the system 100 can include a variable capacitor frequency-selective circuit to identify the location and/or map specific nerves (e.g., parasympathetic nerve, sensory nerve, nerve fiber type, nerve subgroup, etc.). The variable capacitor frequency-selective circuit can be defined by the sensor 314 and/or other feature of the end effector (214,

Aerin Exhibit 1011, Page 494 of 2183
Aerin Medical Inc. v. Neurent Medical Ltd.
IPR2025-01126

314). Nerves have different resonant frequencies based on their function and structure. Accordingly, the system 100 can include a tunable LC circuit with a variable capacitor (C) and/or variable inductor (L) that can be selectively tuned to the resonant frequency of desired nerve types. This allows for the detection of neural activity only associated with the selected nerve type and its associated resonant frequency. Tuning can be achieved by moving the core in and out of the inductor. For example, tunable LC circuits can tune the inductor by: (i) changing the number of coils around the core; (ii) changing the cross-sectional area of the coils around the core; (iii) changing the length of the coil, and/or (iv) changing the permeability of the core material (e.g., changing from air to a core material). Systems including such a tunable LC circuit provide a high degree of dissemination and differentiation not only as to the activation of a nerve signal, but also with respect to the nerve type that is activated and the frequency at which the nerve is firing.

Anatomical Mapping

In various embodiments, the system 100 is further configured to provide minimally-invasive anatomical mapping that uses focused energy current/voltage stimuli from a spatially localized source (e.g., the electrodes (244, 336)) to cause a change in the conductivity of the of the tissue at the interest zone and detect resultant biopotential and/or bioelectrical measurements (e.g., via the electrodes (244, 336)). The current density in the tissue changes in response to changes of voltage applied by the electrodes (244, 336), which creates a change in the electric current that can be measured with the end effector (214, 314) and/or other portions of the system 100. The results of the bioelectrical and/or biopotential measurements can be used to predict or estimate relative absorption profilometry to predict or estimate the tissue structures in the interest zone. More specifically, each cellular construct has unique conductivity and absorption profiles that can be indicative of a type of tissue or structure, such as bone, soft tissue, vessels, nerves, types of nerves, and/or certain neural tissue. For example, different frequencies decay differently through different types of tissue. Accordingly, by detecting the absorption current in a region, the system 100 can determine the underlying structure and, in some instances, to a sub-microscale, cellular level that allows for highly specialized target localization and mapping. This highly specific target identification and mapping enhances the efficacy and efficiency of

Aerin Exhibit 1011, Page 495 of 2183
Aerin Medical Inc. v. Neurent Medical Ltd.
IPR2025-01126

neuromodulation therapy, while also enhancing the safety profile of the system 100 to reduce collateral effects on non-target structures.

To detect electrical and dielectric tissue properties (e.g., resistance, complex impedance, conductivity, and/or, permittivity as a function of frequency), the electrodes (244, 336) and/or another electrode array is placed on tissue at an interest region, and an internal or external source (e.g., the generator 106) applies stimuli (current/voltage) to the tissue. The electrical properties of the tissue between the source and the receiver electrodes (244, 336) are measured, as well as the current and/or voltage at the individual receiver electrodes (244, 336). These individual measurements can then be converted into an electrical map/image/profile of the tissue and visualized for the user on the display 112 to identify anatomical features of interest and, in certain embodiments, the location of firing nerves. For example, the anatomical mapping can be provided as a color-coded or gray-scale three-dimensional or two-dimensional map showing differing intensities of certain bioelectric properties (e.g., resistance, impedance, etc.), or the information can be processed to map the actual anatomical structures for the clinician. This information can also be used during neuromodulation therapy to monitor treatment progression with respect to the anatomy, and after neuromodulation therapy to validate successful treatment. In addition, the anatomical mapping provided by the bioelectrical and/or biopotential measurements can be used to track the changes to non-target tissue (e.g., vessels) due to neuromodulation therapy to avoid negative collateral effects. For example, a clinician can identify when the therapy begins to ligate a vessel and/or damage tissue, and modify the therapy to avoid bleeding, detrimental tissue ablation, and/or other negative collateral effects.

Furthermore, the threshold frequency of electric current used to identify specific targets can subsequently be used when applying therapeutic neuromodulation energy. For example, the neuromodulation energy can be applied at the specific threshold frequencies of electric current that are target neuronal-specific and differentiated from other non-targets (e.g., blood vessels, non-target nerves, etc.). Applying ablation energy at the target-specific frequency results in an electric field that creates ionic agitation in the target neural structure, which leads to differentials in osmotic potentials of the targeted neural tissue. These osmotic potential differentials cause dynamic changes in neuronal membronic potentials (resulting from the difference in intra-cellular and extra-cellular fluidic pressure) that lead to vacuolar degeneration of the targeted neural tissue and, eventually, necrosis. Using the highly targeted threshold neuromodulation

Aerin Exhibit 1011, Page 496 of 2183
Aerin Medical Inc. v. Neurent Medical Ltd.
IPR2025-01126

energy to initiate the degeneration allows the system 100 to deliver therapeutic neuromodulation to the specific target, while surrounding blood vessels and other non-target structures are functionally maintained.

In some embodiments, the system 100 can further be configured to detect bioelectrical properties of tissue by non-invasively recording resistance changes during neuronal depolarization to map neural activity with electrical impedance, resistance, bio-impedance, conductivity, permittivity, and/or other bioelectrical measurements. Without being bound by theory, when a nerve depolarizes, the cell membrane resistance decreases (e.g., by approximately 80×) so that current will pass through open ion channels and into the intracellular space. Otherwise the current remains in the extracellular space. For non-invasive resistance measurements, tissue can be stimulated by applying a current of less than 100 Hz, such as applying a constant current square wave at 1 Hz with an amplitude less than 25% (e.g., 10%) of the threshold for stimulating neuronal activity, and thereby preventing or reducing the likelihood that the current does not cross into the intracellular space or stimulating at 2 Hz. In either case, the resistance and/or complex impedance is recorded by recording the voltage changes. A complex impedance or resistance map or profile of the area can then be generated.

For impedance/conductivity/permittivity detection, the electrodes (244, 336) and/or another electrode array are placed on tissue at an interest region, and an internal or external source (e.g., the generator 106) applies stimuli to the tissue, and the current and/or voltage at the individual receiver electrodes (244, 336) is measured. The stimuli can be applied at different frequencies to isolate different types of nerves. These individual measurements can then be converted into an electrical map/image/profile of the tissue and visualized for the user on the display 112 to identify anatomical features of interest. The neural mapping can also be used during neuromodulation therapy to select specific nerves for therapy, monitor treatment progression with respect to the nerves and other anatomy, and validate successful treatment.

In some embodiments of the neural and/or anatomical detection methods described above, the procedure can include comparing the mid-procedure physiological parameter(s) to the baseline physiological parameter(s) and/or other, previously-acquired mid-procedure physiological parameter(s) (within the same energy delivery phase). Such a comparison can be used to analyze state changes in the treated tissue. The mid-procedure physiological parameter(s) may also be compared to one or more predetermined thresholds, for example, to

Aerin Exhibit 1011, Page 497 of 2183
Aerin Medical Inc. v. Neurent Medical Ltd.
IPR2025-01126

indicate when to stop delivering treatment energy. In some embodiments of the present technology, the measured baseline, mid-, and post-procedure parameters include a complex impedance. In some embodiments of the present technology, the post-procedure physiological parameters are measured after a pre-determined time period to allow the dissipation of the electric field effects (ionic agitation and/or thermal thresholds), thus facilitating accurate assessment of the treatment.

In some embodiments, the anatomical mapping methods described above can be used to differentiate the depth of soft tissues within the nasal mucosa. The depth of mucosa on the turbinates is relatively deep while the depth off the turbinate is relatively shallow and, therefore, identifying the tissue depth in the present technology also identifies positions within the nasal mucosa and where precisely to target. Further, by providing the micro-scale spatial impedance mapping of epithelial tissues as described above, the inherent unique signatures of stratified layers or cellular bodies can be used as identifying the region of interest. For example, different regions have larger or small populations of specific structures, such as submucosal glands, so target regions can be identified via the identification of these structures.

In some embodiments, the system 100 includes additional features that can be used to detect anatomical structures and map anatomical features. For example, the system 100 can include an ultrasound probe for identification of neural tissue and/or other anatomical structures. Higher frequency ultrasound provides higher resolution, but less depth of penetration. Accordingly, the frequency can be varied to achieve the appropriate depth and resolution for neural/anatomical localization. Functional identification may rely on the spatial pulse length ("SPL") (wavelength multiplied by number of cycles in a pulse). Axial resolution (SPL/2) may also be determined to locate nerves.

In some embodiments, the system 100 can further be configured to emit stimuli with selective parameters that suppress rather than fully stimulate neural activity. For example, in embodiments where the strength-duration relationship for extracellular neural stimulation is selected and controlled, a state exists where the extracellular current can hyperpolarize cells, resulting in suppression rather than stimulation spiking behavior (i.e., a full action potential is not achieved). Both models of ion channels, Hodgkin–Huxley (HH) and Retinol Ganglion Cell (RGC), suggest that it is possible to hyperpolarize cells with appropriately designed burst extracellular stimuli, rather than extending the stimuli. This phenomenon could be used to

Aerin Exhibit 1011, Page 498 of 2183
Aerin Medical Inc. v. Neurent Medical Ltd.
IPR2025-01126

suppress, rather than stimulate, neural activity during any of the embodiments of neural detection and/or modulation described herein.

In various embodiments, the system 100 could apply the anatomical mapping techniques disclosed herein to locate or detect the targeted vasculature and surrounding anatomy before, during, and/or after treatment.

Incorporation by Reference

References and citations to other documents, such as patents, patent applications, patent publications, journals, books, papers, web contents, have been made throughout this disclosure. All such documents are hereby incorporated herein by reference in their entirety for all purposes.

Equivalents

Various modifications of the invention and many further embodiments thereof, in addition to those shown and described herein, will become apparent to those skilled in the art from the full contents of this document, including references to the scientific and patent literature cited herein. The subject matter herein contains important information, exemplification and guidance that can be adapted to the practice of this invention in its various embodiments and equivalents thereof.

Reference throughout this specification to "one embodiment" or "an embodiment" means that a particular feature, structure, or characteristic described in connection with the embodiment is included in at least one embodiment. Thus, appearances of the phrases "in one embodiment" or "in an embodiment" in various places throughout this specification are not necessarily all referring to the same embodiment. Furthermore, the particular features, structures, or characteristics may be combined in any suitable manner in one or more embodiments.

The terms and expressions which have been employed herein are used as terms of description and not of limitation, and there is no intention, in the use of such terms and expressions, of excluding any equivalents of the features shown and described (or portions thereof), and it is recognized that various modifications are possible within the scope of the claims. Accordingly, the claims are intended to cover all such equivalents.

EXAMPLES

Aerin Exhibit 1011, Page 499 of 2183
Aerin Medical Inc. v. Neurent Medical Ltd.
IPR2025-01126

The following description provides details and results of a study concerning the characterization and optimization of radiofrequency (RF) thermal ablations for the treatment of nasal conditions, namely rhinitis, in accordance with the systems and methods of the present invention.

I. Introduction:

Rhinitis (allergic or non-allergic or combination of both types) is an inflammation mediated disease of mucosal tissue lining the nasal cavity. Rhinitis can result in a variety of local conditions e.g., post-nasal drainage, nasal obstruction, rhinorrhea, sneezing, itching, and numerous other symptoms, adversely affecting quality of life. Rhinitis is one of the most common nasal disorders in the United States with an estimated prevalence of approximately 80 million.

Autonomic fibers innervate the submucosal glands and the vasculature of the nasal mucosa and sub-mucosa. An imbalance in the autonomic nervous function often leads to inflammation of the nasal mucosa, where an increase in parasympathetic input drives hyperactivity of the submucosal glands and engorgement of the venous sinusoids; resulting in glandular secretion and vasodilation. Recently, sphenopalatine nerve resection has been described as an effective surgical treatment that severs the post-ganglionic neural pathways within the nose, and can provide beneficial symptomatic relief.

The NEUROMARK System, designed and developed by Neurent Medical Ltd, as shown in Figure 1a and 1b, is a novel device with a multi-stage electrode array that treats rhinitis. The NEUROMARK™ System through local application of radio frequency (RF) in the nasal cavity targets the primary and accessory innervation pathways of the posterior nasal nerves providing lasting symptom relief for treatment of chronic rhinitis. NEUROMARK™ System creates multiple distinct focal lesions on the lateral wall of the nasal cavity targeting two high density nerve rich regions whilst simultaneously limiting surface damage and avoiding wider collateral tissue damage.

Typically, during RF ablation, ~500 kHz current is applied to the target tissue via a pair of electrodes that induces localized volumetric heating due to the Joule effect thus creating regions of high current density. Prior RF ablation studies have demonstrated the importance of selecting appropriate power delivery algorithms, as applied power level during ablative

Aerin Exhibit 1011, Page 500 of 2183
Aerin Medical Inc. v. Neurent Medical Ltd.
IPR2025-01126

treatments greatly impacts the rate of heating and transient changes in impedance at the electrode – tissue interface, and consequently the size and shape of ablation zones. Generally, the target temperature using RF for ablating a nerve is considered to be at or above 45°C. RF ablation is a commonly used approach for *in situ* thermal ablation of tissue, and is in clinical use as a minimally invasive therapeutic method for volumetric reduction of gross tissue treating hypertrophied turbinates.

The objective of the present study was to perform single and multifactorial evaluation of significant electromechanical parameters of the NEUROMARK™ system; such as electrode geometry, electrode spacing, energy delivery strategy to assess both the individual impact and as a complex interactive set on treatment outputs such as ablation depth and volume, treatment-temperature isotherms, treatment time and tissue thermal damage. As tissue damage is a function of both temperature and time; this research evaluated relevant electromechanical parameters and determined an optimization set of the identified parameters to maximize the ablation depth; with specific interest on creating isothermic contours between 55-60°C – 85-90°C to ensure submucosal neurogenic pathways are ablated while minimizing collateral tissue damage whilst maintaining a clinically relevant treatment duration. Temperatures higher than 90°C often lead to irreversible changes in the tissue such as carbonization and desiccation of the tissue surrounding the active electrodes, limiting any further conduction of thermal energy and restricting the energy deposition and thus reducing the size of ablation volume (references).

We employed a combination of multi-physics computational modelling and *ex vivo* studies to carry out the optimization studies. Specifically, the effects of electrode geometry including the electrode length and inter-pair spacing on temperature isotherms, lesion depth as well as treatment time was evaluated individually as well as a combination with respect to different power levels. Multiple duty cycle energy delivery strategies were also investigated with respect to treatment times. Modeling results were validated with benchtop experiments using *excised* tissue. To estimate the anticipated performance *in vivo*, a second set of modelling study was also performed by incorporating the effects of tissue blood perfusion.

II. Methods:

A. Radiofrequency Ablation System for Rhinitis Treatment

Aerin Exhibit 1011, Page 501 of 2183
Aerin Medical Inc. v. Neurent Medical Ltd.
IPR2025-01126

The NEUROMARK™ system consists of a handheld RF NEUROMARK™ device, incorporating a deployable electrode array and a NEUROMARK™ RF generator providing control of power delivery (see FIG. 12A). The device shaft is suitable for advancement into the nasal cavity alongside and under the guidance of nasal endoscope. Once advanced to the treatment site, the atraumatic super elastic electrode array is deployed to facilitate electrical contact with the nasal mucosa.

The end effector consists of two stages of 6 petals each, with every petal consisting of multiple bipolar electrode pairs (see FIGS. 12A and 12B). NEUROMARK™ RF generator contains a multiplexer unit that can independently power and control each petal. The RF generator provides power at 460 kHz in pulsed or continuous mode. Prior to, and during power delivery, the generator constantly monitors electrical impedance at the tissue interface for each petal.

B. NEUROMARK™ System: Rhinitis Treatment Objectives

The main objective of this treatment is to create distinct multi-point lesions along the lateral wall of the nasal cavity, with the depth of each respective lesion up to 4 mm to ablate the sub-mucosal tissue and submucosal neurogenic tone while minimizing surface mucosal and collateral tissue damage within and between each ablation lesion. Another objective of this treatment is to deliver optimum energy in order to delay the onset of impedance roll-off until the target ablation depth is achieved, while maintaining clinically relevant treatment time.

C. Model-Based Assessment and Optimization of Device Geometry and Energy-Delivery Settings

We employed computational Bio-heat transfer models to characterize the impact of NEUROMARK™ device electrode geometrical parameters and energy delivery strategies that play a dominant role on current density patterns within tissue, as these can be expected to considerably impact thermal ablation profiles. Device geometry parameters that affect current density patterns, include electrode diameter, electrode length, intra-pair and inter-pair electrode spacing, rendered in FIG. 12C. These parameters and their respective ranges were evaluated individually first and then subsequently as a combination with respect to various power levels. The critical parameters, and their optimum ranges were chosen based on: 1) percentage target

Aerin Exhibit 1011, Page 502 of 2183
Aerin Medical Inc. v. Neurent Medical Ltd.
IPR2025-01126

ablation depth achieved and 2) maximal separation between thermal damage/isothermal contours ranging between 55-60°C – 85-90°C (or zone of impact) to ensure the submucosal neurogenic tone are ablated while minimizing unintended tissue damage by maintaining a clinically relevant treatment duration.

In the present study, electrode diameter and intra-pair spacing were kept constant. The range of electrode length investigated from a baseline and 20% and 40% higher than the baseline also referred to as short, medium and large respectively. Similarly, the range of electrode inter-pair spacing investigated was from a baseline and 30% and 60% higher than the baseline, also referred to as short, medium and large respectively. To fully comprehend the complex interplay of these parameters on ablation depth, zone of impact and treatment time, the combined effect of the optimum/critical parameters selected from single factor optimization was also evaluated. In addition; constant applied power and pulsed or duty cycled (DC) power delivery (100%, 70% and 50% of the constant power) was also investigated with respect to the ablation depth, isothermal contours as well as the treatment time.

Using COMSOL Multiphysics we performed two types of simulations: 1) *ex vivo* scenario to carry out the single and multifactorial parameter optimization and validation with bench testing data and 2) *in vivo* scenario incorporating the blood perfusion effect.

D. Modeling Strategy to Predict Thermal Ablation Characteristics *ex vivo*

The *ex vivo* scenario modeling was used to develop and validate the computational model using *ex vivo* data. This model was then used for all the optimization work. Liver tissue was used in this approach for various reasons including 1) widely researched modeling strategies for RFA in liver tissue; 2) readily available tissue to enable *ex vivo* testing and validation. Using this approach, as discussed in the previous section, we assessed the impacts of energy delivery strategy (i.e., continuous vs. duty cycle) and electrode configuration (EL and IP spacing). The simulations were carried out at room temperature as initial tissue temperature and was terminated either following the impedance roll-off or after a sufficiently long ablation time (see FIG. 17). To validate the model and confirm the simulated thermal lesion characteristics, *ex vivo* experiments were conducted on fresh bovine liver tissue at room temperature. Power level of low-medium and medium-high range were chosen for bench testing to achieve similar treatment times (time for impedance roll-off) as that of the computational modeling.

Aerin Exhibit 1011, Page 503 of 2183
Aerin Medical Inc. v. Neurent Medical Ltd.
IPR2025-01126

As depicted in Table 1 below, Arrhenius thermal damage model was implemented to simulate thermal damage dependent changes in tissue electrical conductivity (*in vivo* and *ex vivo*) at 450 kHz. As previously reported [31], optimized values of model parameters were selected as: $\alpha = 1.26 \times 10^{-2}$ [°C^{-1}], $\beta = 1.25$, and $\gamma = 2.0 \times 10^{-15}$ [°C^{-8}].

Table 1 Biophysical properties implemented in the *ex vivo* model

Liver tissue	Unit	Value @ 25 °C	Temperature dependency
Thermal conductivity k [30]	$w.(m.k)^{-1}$	$K_0 = 0.498$	$k(T) = k_0 + 0.0008\ T$
Electrical conductivity σ [31], [32]	$S.m^{-1}$	$\sigma_0 = 0.228$	$\sigma(t,T) = \sigma_0[1 - \alpha(T-T_0) + \beta u(T) - \gamma(T-T_0)^8]$
Heat capacity c [33], [30]	$j.(kg.K)^{-1}$	$c_0 = 3800$	$c(T) = \begin{cases} c_0 \\ c_0 + 28.9\,(T - 63.5) \end{cases}$
Density ρ [30]	$kg.(m)^{-3}$	$\rho = 1060$	$\rho(T) = 1060$

E. Modeling Strategy to Predict Thermal Ablation Characteristics *in vivo*

Computational modeling was also performed to evaluate the *in vivo* scenario, i.e., incorporating blood perfusion effects starting at initial body temperature. Since the mucosal dielectric properties at the frequency of interest are not readily available in the literature, muscle tissue properties were used as muscle deemed comparable to that of the mucosal tissue. Recently, blood perfusion value of the mucosal tissue became available and was significantly different (~ 16-fold) than that of the muscle tissue. In order to consider and appreciate the effect of blood perfusion during RFA, muscle electro-thermal tissue properties were implemented in our model at 37°C (initial body temperature) with three cases using: 1) muscle blood perfusion value (or low blood perfusion case); 2) mucosal blood perfusion value (or high blood perfusion case); 3) no blood perfusion effect. All the tissue properties used for the *in vivo* simulations are listed in Table 2 below.

Table 2 Biophysical properties implemented in the *in vivo* model

Muscle tissue	Unit	Value @ 37 °C
Density ρ	$kg.(m)^{-3}$	$\rho_0 = 1090$

Aerin Exhibit 1011, Page 504 of 2183
Aerin Medical Inc. v. Neurent Medical Ltd.
IPR2025-01126

Thermal conductivity k	$w.(m.k)^{-1}$	$K_0 = 0.49$
Electrical conductivity σ	$S.m^{-1}$	$\sigma_0 = 0.446$
Heat capacity c	$J.(kg.K)^{-1}$	$c_0 = 3421$

Tissue type	**Blood perfusion rate**
Muscle	37 $ml.(\text{min.kg})^{-1}$
Mucosal	594 $ml.(\text{min.kg})^{-1}$

F. Mathematical Modeling and Governing Equations

We employed finite element method (FEM) computational models to simulate RF ablation with the NEUROMARK™ micro-electrode array. A coupled electro-thermal model was implemented to compute the electric field density in tissue, electric power density profiles, and transient heat transfer. For modeling RF ablation at ~500 kHz, the quasi-static approximation was employed in our model. The Laplace's equation was solved for determining the voltage profile in the target tissue while the subsequent spatial distribution of tissue temperature was obtained by solving the Penne's bio-heat transfer equation. Tissue electrical and thermal properties vary considerably as a function of the time– temperature history during heating. Table 1 includes temperature dependent properties implemented in our model.

A simplified 3D computational model was implemented to emulate bipolar configuration of the RF ablation device (FIG. 12C). To simplify simulations, computational models of a universal set of two bipolar pairs were considered; the wires were implemented as straight conductors, rather than curved. Device domains in our computational model included electrodes as perfect conductors, and insulated coating as perfectly non-conducting insulator.

In these studies, the NEUROMARK™ RF generator was used in a constant power mode, i.e., the voltage at the electrode surface is adjusted to maintain a constant time-averaged power delivered to tissue. The voltage needs to be adjusted since the tissue conductivity changes during heating, and thus maintaining a constant voltage would yield variations in power delivered to tissue. Thus, we also sought to implement a constant power scheme within our simulations. This was done by implementing a closed loop binary control system that first estimated the total current delivered to tissue and then adjusted the voltage boundary condition at the electrode

Aerin Exhibit 1011, Page 505 of 2183
Aerin Medical Inc. v. Neurent Medical Ltd.
IPR2025-01126

surface in order to maintain a constant power. Total electric current during simulation was used as an indicator for input voltage. The electric current in our model was calculated by summing the current density vectors normal to each surface of a test cuboid defined to surround the active electrodes, and the implicit control interface within COMSOL Multiphysics was used to define an upper and lower threshold for the total power with a tolerance of less than 5%.

G. Details of The Mesh

A total of 432,159 tetrahedral mesh elements were used to discretize the model geometry, with a minimum and maximum element size of 0.08 mm and 0.4 mm respectively in the target tissue. Finest mesh density was selected in electrode domains with maximum element size of 0.06 mm as the electro-thermal gradients tend to be steep in these regions. An initial source voltage ($V_0 \neq 0$) was applied to the boundaries of active electrodes. The corresponding electrodes were defined as electrical ground returns ($V = 0$). Initial modeling results indicating that when using the same applied voltage at the electrodes, as recovered from generator logs, the time to impedance roll off observed in simulations occurred considerably faster in simulation, consequently allowing insufficient time for the thermal ablation zone to grow. Thus, we decided to adjust the initial applied voltage (and thus the power level controlled) such that the time to roll-off in simulations agreed (within 0–5 s) with experimental observations.

Electrode and insulation domains were omitted from our model due to negligible resistive heating because the electrode and insulation domains are assumed to be perfect conductor and insulator respectively. To reasonably approximate free convective cooling in *ex vivo* tissue, a convective heat flux boundary condition was applied to the exterior surface of modeling domain. The convective heat transfer coefficient and external temperature were selected as 10 $[W.(m^2.K)^{-1}]$, and 25°C, respectively.

The outputs of the computational model were the extent of the thermal damage zone, and the transient impedance profile. The extent of the thermal damage zone was determined using the Arrhenius thermal damage model where values of frequency factor and activation energy were respectively defined as 5.51×10^{41} $[S^{-1}]$, and 2.769×10^5 $[J\ (mol)^{-1}]$ for the liver tissue. Correspondingly, for the changes in the electrical conductivity of muscle tissue, the parameters were implemented as 2.94×10^{39} $[S^{-1}]$, 2.596×10^5 $[J\ (mol)^{-1}]$. Finally, boundaries of ablation zones were estimated based on a threshold of $\Omega\ (T, t) = 1$, corresponding to 63% of the thermal

Aerin Exhibit 1011, Page 506 of 2183
Aerin Medical Inc. v. Neurent Medical Ltd.
IPR2025-01126

damage process being complete.

G. Benchtop Experimental Evaluation in *ex vivo* Tissue

To characterize thermal ablation profiles and validate computational models, initial experiments were conducted on the benchtop in fresh *ex vivo* bovine liver tissue with the NEUROMARK™ device (FIG. 12D). In these experiments, the impact of power levels on the size and shape of ablation zone was characterized, through the electrical profile logs from the generator and co-registered through dimensional assessments of ablation zones; assessed by the extent of opacification, i.e., visibly discolored tissue. We also considered variable input ranges within the applied power levels including constant power delivery and duty cycle power delivery and assessed the electrical profile logs in bench studies which were consistent with that in the simulations. Prior to ablation, liver tissue was preheated up to room temperature of 25°C in the water bath, then each heating protocol was conducted in 3 trials for repeatability purposes.

III. Results:

A. Effect of Electrode Length on Thermal Ablation Zones

Simulations were run with different electrode lengths (i.e., short, medium, and long electrodes) with same energy delivery strategy to investigate the effect on ablation outcomes while keeping the other geometrical parameters fixed. FIGS. 13A and 13B show that the zone of impact increased with increase in EL where the maximum separation between 55-60 °C to 85-90°C isothermal contours was also observed. With increase in EL, the ablation depth also increased significantly, over 200 percent, as shown in the Figure 2a, 2b, suggesting that the EL could be a critical factor in determining the ablation depth. However, FIG. 13C shows that increasing the EL delayed the impedance roll-off, resulting in a longer ablation time.

B. Effect of Electrode Inter-Pair Spacing on Thermal Ablation Zones

Simulations were run with different electrode IP spacing with the same energy delivery strategy to investigate the effects of IP spacing on ablation outcomes while keeping other geometrical parameters fixed.

FIGS. 14A and 14B show that with the short IP spacing, the lesions appeared to be

Aerin Exhibit 1011, Page 507 of 2183
Aerin Medical Inc. v. Neurent Medical Ltd.
IPR2025-01126

merged between two electrode pairs and as the IP spacing increased, the distinct lesions were present with greater zone of impact. The lesion depth remained similar with only a slight increase in case of large IP spacing (FIGS. 14A and 14D). FIG. 14C shows that increasing the IP spacing prolonged the ablation time by delaying the impedance roll-off, leading to larger surface ablation.

C. Combined Effects of Electrode Length and Inter-pair Spacing on Thermal Ablation Zones

To evaluate the multifactorial/combined effects of EL and IP spacing on ablation outcomes, simulations were run to using base electrode configuration (short EL and short IP spacing) and optimized configuration (long EL and long IP spacing).

FIGS. 15A and 15B show that with the base configuration, the zone of impact is narrow and shallow which significantly increased with the optimized configuration. Most importantly, the separation between the isothermal zones 55-60°C and 85-90°C is much more pronounced with the optimized configuration. Consistent with the observations in the single factor simulations of various EL, the percentage increase in the ablation depth with the optimized configuration was over 200 when compared to that of base configuration. However, FIG. 15C shows that the optimized configuration prolonged the ablation time by delaying the impedance roll-off, leading to larger surface ablation.

D. *Ex vivo* Validation of Computational Modeling with Optimized Electrode Geometry Configuration

Ex vivo experiments on liver tissue were conducted using the device with optimum electrode configuration (i.e., long EL, and long IP spacing) to verify and validate the computational modeling outcomes. FIGS. 16A and 16B show that the power levels in the computational modeling was adjusted to match the treatment times closely with that of two ranges of power levels (low-medium and medium-high) in bench testing.

FIG. 16C shows the ablated liver tissue that appears as slightly paler and the depth of the ablated tissue was measured and compared between different power ranges. FIG. 16D shows that 1) the ablation depths predicted by computational modeling closely matched to that of the experiment at the respective power levels; and 2) increasing the power level does not necessarily increase the ablation depth. Also, these results demonstrate that the treatment time and power

Aerin Exhibit 1011, Page 508 of 2183
Aerin Medical Inc. v. Neurent Medical Ltd.
IPR2025-01126

level are inter-dependent and plays a critical role in ablation outcomes.

E. Effect of Energy Delivery Strategy on Ablation Zones

FIG. 17 details the simulation results following different energy delivery strategies including constant and duty cycle energy deliveries. Temperature maps of tissue depth are shown immediately following the treatment (after impedance role-off) for each heating protocol with contours of thermal damage.

As demonstrated in FIG. 17, duty cycle mode delayed the impedance roll-off and resulted in longer ablation time compared to constant power delivery mode. Impedance roll-off occurred in 15 s, 29 s, and 120 s for constant power delivery, 70% duty cycle and 50% duty cycle, respectively. Ablation depth was however similar regardless of the energy delivery strategy, but the temperatures at which the thermal damage occurred varied with the % duty cycle compared to that of constant power. These results show that the similar ablation outcomes can be achieved with pulsed energy delivery strategy within a reasonable treatment time.

F. Effect of Blood Perfusion on Ablation Results

Models of muscle tissue with different blood perfusion effects (i.e., no blood perfusion, muscle blood perfusion (low perfusion scenario), and mucosal blood perfusion (high perfusion scenario) were considered to simulate the effect of blood flow on ablation results. Temperature maps and tissue impedance plots following RF ablation were simulated (FIG. 18).

Model with mucosal perfusion (high perfusion) effect impeded out slightly later than that of muscle perfusion (low perfusion) effect. Despite a prolonged ablation time when using mucosal blood perfusion that is significantly higher than that of muscle, all three models resulted in a similar zone of impact and ablation depth.

IV. Discussion:

In this study, we employed Multiphysics modeling and bench testing to comparatively assess the impact and subsequently optimize the NEUROMARK™ RF ablation device geometry and energy delivery parameters to achieve desired lesion characteristics, with application to treatment of chronic rhinitis. For safe and successful rhinitis treatment, sufficiently deep thermal

Aerin Exhibit 1011, Page 509 of 2183
Aerin Medical Inc. v. Neurent Medical Ltd.
IPR2025-01126

ablation zones (up to 4 mm) should target posterior lateral nasal nerves to effectively decrease Rhinitis symptoms while minimizing tissue surface damage within the nasal cavity. Our *ex vivo* computational results illustrate that achieving deeper ablation zones may also increase tissue surface damage. Thus, RF delivery for rhinitis treatments should balance the trade-offs of achieving ablation zones at adequate depth, while minimizing wider tissue collateral damage.

Computational models predicted deeper and longer ablation zones when using longer electrodes indicating that the EL is a significant factor in determining the ablation depth. Impedance roll-off was significantly delayed (8x time period for long electrodes compared to for short electrodes) when using longer electrodes and was associated with longer ablation durations and consequently deeper and larger ablation zones. This may be attributed to the lower current density when using longer electrodes. Since the rate of RF heating is proportional to the current density, a lower current density leads to more gradual heating, delaying the time to impedance roll-off, extending the ablation duration, and finally leading to deeper ablation zones.

The effect of device IP spacing was also assessed with computational models. The model with shorter inter-pair spacing led to shorter ablation time (faster impedance roll-off) and smaller tissue surface ablation while causing similar ablation depth and zone of impact when compared to the model with longer inter-pair spacing (see Table 4). Tissue thermal conduction plays a significant role in the size of ablation depth when electrode pairs are closer to each other. This leads to sufficiently deep ablation zones despite a short ablation time and early impedance roll-off. Thus, IP spacing has an effect on lesion spread but not depth.

Table 4. Impact of device geometry on ablation results

Parameter	Ablation depth	Surface area (width and length)	Ablation time
Longer electrode	Larger	Larger	Longer
Longer inter-pair	Neutral	Larger	Longer

The combined effect of these parameters, EL and IP on lesion characteristics and treatment times were also evaluated. With the optimized configuration (long EL and long IP), the

Aerin Exhibit 1011, Page 510 of 2183
Aerin Medical Inc. v. Neurent Medical Ltd.
IPR2025-01126

zone of impact is greater, ablation zones are deeper and larger as compared to the shallow ablation zones created using base configuration (short EP and short IP). However, as expected, the ablation times were also longer with the optimized configuration.

According to *ex vivo* simulation results (FIG. 17), delaying the impedance roll-off through duty cycle energy delivery resulted in similar ablation zone depth despite a prolonged ablation when compared to the ablation zones created by heating protocol with constant power delivery. This is likely due to significant contribution of the tissue thermal conductivity towards resistive heating when tissue is subjected to high temperature gradients during the RF ablation. Thus, an optimized delivery strategy could be pulsed energy delivery with a reasonable treatment time (less than 120 s for impedance roll-off). The *ex vivo* experimentation was carried out to validate the simulation models. The device end effector used for ex vivo testing was designed with optimized geometry parameters, i.e., long EL and long IP spacing. In our simulations, we adjusted applied power levels so that time to roll-off in experiments and simulations were matched (FIG. 16). When applying the same power level in simulations, models predicted considerably faster impedance roll-off and shorter ablation times, consequently yielding decreased ablation zone sizes. We note that we are using an RF computational modeling approach that has previously been applied in several modeling studies, yielding good agreement with experimental findings. One key difference is that we are modeling RF ablation with very thin electrodes, considerably smaller than electrodes used for liver or cardiac RF ablation (typically ~1-2 mm diameter), and thus associated with a faster rate of heating due to a very high electric current density in regions close to the electrode. One explanation is that tissue electrical conductivity implemented in our model may not precisely predict the changes in tissue properties with regards to sudden rises in temperature. Also, in the experiment, power is controlled based on an effective impedance of 4 electrode pairs within one petal of the NEUROMARK™ device, and thus the power logged captures the equivalent impedance across all 4 pairs. Within the idealized modeling environment, power was applied to approximate equivalent power delivered to each individual bipolar electrode pair, although this may not be the case in experiment. We used the same model for simulating RFA with a 16 G monopolar needle (OD ≈1.6 mm), and simulation results including power level, impedance roll-off time and ablation zones matched quite well with experiment (data not shown)

A comparison of simulated and experimentally measured transient impedance profiles

Aerin Exhibit 1011, Page 511 of 2183
Aerin Medical Inc. v. Neurent Medical Ltd.
IPR2025-01126

during RFA in *ex vivo* liver tissue is illustrated in FIG. 16, confirming the consistency in tissue impedance trends between simulation results and experimental observations ($R = 0.92$). An applied power of 1.1 W in simulations was considered to model an experimental ablation of low-medium power since these yielded similar impedance roll-off times (~120 s). The discrepancy between power levels may be due to the manner in which the heat-induced changes in tissue biophysical properties are implemented in our model. In particular, heating rates near the electrode tip for this application generally ranged between 1.5– 4.5 °C/s; however, tissue electrical conductivity changes during heating have previously only been reported for heating rates between 0.02– 0.54 °C/s. Nevertheless, a good agreement between simulation and experimental results were observed, confirming constant power delivery with longer impedance roll-off time as the potential heating protocol for creating deeper ablation zones.

Our model was further developed to evaluate the effect of sub-mucosal blood flow on ablation results during *in vivo* RFA. Unlike prior studies that reported blood perfusion as a major obstacle in RF heating treatments, we observed that blood perfusion effect on ablation results could be negligible during RFA treatment of nasal mucosa (see FIG. 18). This may be attributed to the large heating rate (~10^8 [$W\ m^{-3}$]) within the target tissue that outweighs blood heat sink effect. A short distance (in the order of mm) between active and ground electrodes likely leads to producing a significantly high electric current during the ablation procedure, leading to a high heating rate and consequent microvascular stasis (i.e., $\omega_b = 0$) within the first few seconds of thermal ablation.

A limitation of the presented study is reporting thermal ablation results in *ex vivo* liver tissue only. It would also be beneficial to further assess the ablation results based on nasal cavity model in *in vivo* tissue but was not feasible in this study due to the lack of data on thermal dose and temperature-dependent dielectric properties for nasal tissue. However, the liver tissue is widely used for RF ablation modeling, and since the model itself was also validated with the *ex vivo* experiments, this model offers immense value in being able to predict the ablation zones to optimize the device features.

In summary, we carried out single and multifactor optimization of electrode configuration and energy delivery strategy of NEUROMARK™ System and determined the optimum parameters to maximize the ablation depth; specifically creating isothermic contours between 55-60°C – 85-90°C to ensure submucosal neurogenic pathways are ablated while minimizing

Aerin Exhibit 1011, Page 512 of 2183
Aerin Medical Inc. v. Neurent Medical Ltd.
IPR2025-01126

unintended tissue damage by maintaining a clinically relevant treatment duration. We employed a multi-physics computational approach which was successfully validated and co-registered the outcomes with *ex vivo* testing. We also showed that the impact of blood perfusion on ablation results might be negligible depending on heating rate during RF ablation.

5

Aerin Exhibit 1011, Page 513 of 2183
Aerin Medical Inc. v. Neurent Medical Ltd.
IPR2025-01126

Claims

What is claimed is:

1. A system for treating a condition, the system comprising:

a treatment device including an end effector comprising one or more electrodes; and

a controller operably associated with the treatment device and configured to:

determine a treatment pattern for controlling delivery of energy from the one or more electrodes to one or more tissues at a target site based, at least in part, on identifying data received from the device associated with the one or more tissues;

receive and process real-time feedback data associated with the one or more tissues upon supplying treatment energy to the one or more electrodes; and

control supply of treatment energy to the one or more electrodes based on the processing of the real-time feedback data to ensure that the delivery of energy from the one or more electrodes is delivered at a level, and for a period of time, sufficient to ablate and/or modulate targeted tissue and minimize and/or prevent collateral damage to surrounding or adjacent non-targeted tissue at the target site.

2. The system of claim 1, wherein the identifying data is associated with one or more properties of the one or more tissues, the one or more properties comprising at least one of a type, a depth, and a location of each of the one or more tissues.

3. The system of claim 2, wherein a subset of the one or more electrodes is configured to deliver non-therapeutic stimulating energy at a frequency/waveform to respective positions at the target site to thereby sense at least bioelectric properties of the one or more tissues at the target site.

4. The system of claim 3, wherein the bioelectric properties comprise at least one of complex impedance, resistance, reactance, capacitance, inductance, permittivity, conductivity, dielectric properties, muscle or nerve firing voltage, muscle or nerve firing current, depolarization, hyperpolarization, magnetic field, and induced electromotive force.

Aerin Exhibit 1011, Page 514 of 2183
Aerin Medical Inc. v. Neurent Medical Ltd.
IPR2025-01126

5. The system of claim 4, wherein the controller is configured to process the identifying data to determine the treatment pattern.

6. The system of claim 5, wherein the processing of identifying data, via the controller, comprises comparing the identifying data received from the device with electric signature data associated with a plurality of known tissue types.

7. The system of claim 6, wherein the electric signature data comprises at least bioelectric properties of known tissue types.

8. The system of claim 5, wherein the comparison comprises correlating the identifying data received from the device with electric signature data from a supervised and/or an unsupervised trained neural network.

9. The system of claim 1, wherein the treatment pattern comprises at least one of a predetermined treatment time, a level of energy to be delivered from the electrodes, and a predetermined impedance threshold.

10. The system of claim 9, wherein the feedback data comprises at least impedance measurement data associated with the targeted tissue at the target site.

11. The system of claim 10, wherein the controller is configured to process the impedance measurement data to calculate an active impedance value during delivery of energy from the one or more electrodes to the targeted tissue.

12. The system of claim 11, wherein the controller is configured to process the active impedance value using an algorithm to determine efficacy of ablation/modulation of the targeted tissue based on a comparison of the active impedance value with at least one of a predetermined minimum impedance value, a predetermined low terminal impedance value, and a predetermined high terminal impedance value.

Aerin Exhibit 1011, Page 515 of 2183
Aerin Medical Inc. v. Neurent Medical Ltd.
IPR2025-01126

13. The system of claim 12, wherein, if the active impedance value is less than the predetermined minimum impedance value, the controller determines that ablation/modulation is unsuccessful and disables energy delivery from the one or more electrodes.

14. The system of claim 12, wherein, if the active impedance value is greater than the predetermined minimum impedance value and greater than the predetermined low terminal impedance value, the controller calculates a slope change for the detection of a slope event.

15. The system of claim 14, wherein:

if a negative slope event is detected, the controller determines that ablation/modulation is successful and disables energy delivery from the one or more electrodes upon detecting a negative slope event; and

if a negative slope event is not detected, the controller determines that ablation/modulation is unsuccessful and disables energy delivery from the one or more electrodes.

16. The system of claim 15, wherein, in the absence of detecting a slope event, the controller determines that ablation/modulation is unsuccessful if the active impedance value is greater than the predetermined high terminal impedance value and disables energy delivery from the one or more electrodes.

17. The system of claim 1, wherein the controller is further configured to transmit a signal resulting in an output, via an interactive interface, of an alert to a user indicating a status of the efficacy of ablation/modulation of the targeted tissue.

18. The system of claim 17, wherein the alert includes a visual alert comprising at least one of a color and text displayed on a graphical user interface (GUI) and indicating whether the ablation/modulation is successful or unsuccessful.

19. The system of claim 1, wherein condition comprises a peripheral neurological condition.

Aerin Exhibit 1011, Page 516 of 2183
Aerin Medical Inc. v. Neurent Medical Ltd.
IPR2025-01126

20. The system of claim 19, wherein the peripheral neurological condition is associated with a nasal condition or a non-nasal condition of the patient.

21. A method for treating a condition, the system comprising:

providing a treatment device comprising an end effector including one or more electrodes and a controller operably associated with the treatment device;

positioning the end effector at a target site associated with a patient;

determining, via the controller, a treatment pattern for controlling delivery of energy from the one or more electrodes to one or more tissues at a target site based, at least in part, on identifying data received from the device associated with the one or more tissues;

receiving, from the device, and processing, via the controller, real-time feedback data associated with the one or more tissues upon supplying treatment energy to the one or more electrodes; and

controlling, via the controller, supply of treatment energy to the one or more electrodes based on the processing of the real-time feedback data to ensure that the delivery of energy from the one or more electrodes is delivered at a level, and for a period of time, sufficient to ablate and/or modulate targeted tissue and minimize and/or prevent collateral damage to surrounding or adjacent non-targeted tissue at the target site.

22. The method of claim 21, wherein the identifying data is associated with one or more properties of the one or more tissues, the one or more properties comprising at least one of a type, a depth, and a location of each of the one or more tissues.

23. The method of claim 22, wherein a subset of the one or more electrodes is configured to deliver non-therapeutic stimulating energy at a frequency/waveform to respective positions at the target site to thereby sense at least bioelectric properties of the one or more tissues at the target site.

24. The method of claim 23, wherein the bioelectric properties comprise at least one of complex impedance, resistance, reactance, capacitance, inductance, permittivity, conductivity, dielectric

Aerin Exhibit 1011, Page 517 of 2183
Aerin Medical Inc. v. Neurent Medical Ltd.
IPR2025-01126

properties, muscle or nerve firing voltage, muscle or nerve firing current, depolarization, hyperpolarization, magnetic field, and induced electromotive force.

25. The method of claim 24, wherein the controller is configured to process the identifying data to determine the treatment pattern.

26. The method of claim 25, wherein the processing of identifying data, via the controller, comprises comparing the identifying data received from the device with electric signature data associated with a plurality of known tissue types.

27. The method of claim 26, wherein the electric signature data comprises at least bioelectric properties of known tissue types.

28. The method of claim 25, wherein the comparison comprises correlating the identifying data received from the device with electric signature data from a supervised and/or an unsupervised trained neural network.

29. The method of claim 31, wherein the treatment pattern comprises at least one of a predetermined treatment time, a level of energy to be delivered from the electrodes, and a predetermined impedance threshold.

30. The method of claim 29, wherein the feedback data comprises at least impedance measurement data associated with the targeted tissue at the target site.

31. The method of claim 30, wherein the controller is configured to process the impedance measurement data to calculate an active impedance value during delivery of energy from the one or more electrodes to the targeted tissue.

32. The method of claim 31, wherein the controller is configured to process the active impedance value using an algorithm to determine efficacy of ablation/modulation of the targeted tissue based on a comparison of the active impedance value with at least one of a predetermined

Aerin Exhibit 1011, Page 518 of 2183
Aerin Medical Inc. v. Neurent Medical Ltd.
IPR2025-01126

minimum impedance value, a predetermined low terminal impedance value, and a predetermined high terminal impedance value.

33. The method of claim 32, wherein, if the active impedance value is less than the predetermined minimum impedance value, the controller determines that ablation/modulation is unsuccessful and disables energy delivery from the one or more electrodes.

34. The method of claim 32, wherein, if the active impedance value is greater than the predetermined minimum impedance value and greater than the predetermined low terminal impedance value, the controller calculates a slope change for the detection of a slope event.

35. The method of claim 34, wherein:

if a negative slope event is detected, the controller determines that ablation/modulation is successful and disables energy delivery from the one or more electrodes upon detecting a negative slope event; and

if a negative slope event is not detected, the controller determines that ablation/modulation is unsuccessful and disables energy delivery from the one or more electrodes.

36. The method of claim 35, wherein, in the absence of detecting a slope event, the controller determines that ablation/modulation is unsuccessful if the active impedance value is greater than the predetermined high terminal impedance value and disables energy delivery from the one or more electrodes.

37. The method of claim 21, wherein the controller is further configured to transmit a signal resulting in an output, via an interactive interface, of an alert to a user indicating a status of the efficacy of ablation/modulation of the targeted tissue.

38. The method of claim 37, wherein the alert includes a visual alert comprising at least one of a color and text displayed on a graphical user interface (GUI) and indicating whether the ablation/modulation is successful or unsuccessful.

Aerin Exhibit 1011, Page 519 of 2183
Aerin Medical Inc. v. Neurent Medical Ltd.
IPR2025-01126

39. The method of claim 21, wherein condition comprises a peripheral neurological condition.

40. The method of claim 39, wherein the peripheral neurological condition is associated with a nasal condition or a non-nasal condition of the patient.

Aerin Exhibit 1011, Page 520 of 2183
Aerin Medical Inc. v. Neurent Medical Ltd.
IPR2025-01126

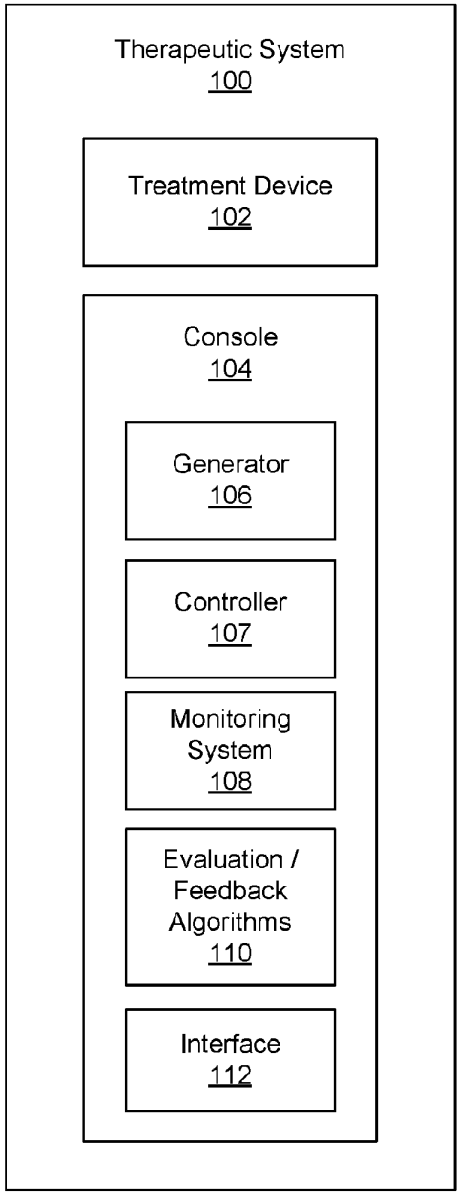
Therapeutic System
100
Treatment Device
102
Console
104
Generator
106
Controller
107
Monitoring System
108
Evaluation / Feedback Algorithms
110
Interface
112

FIG. 1A

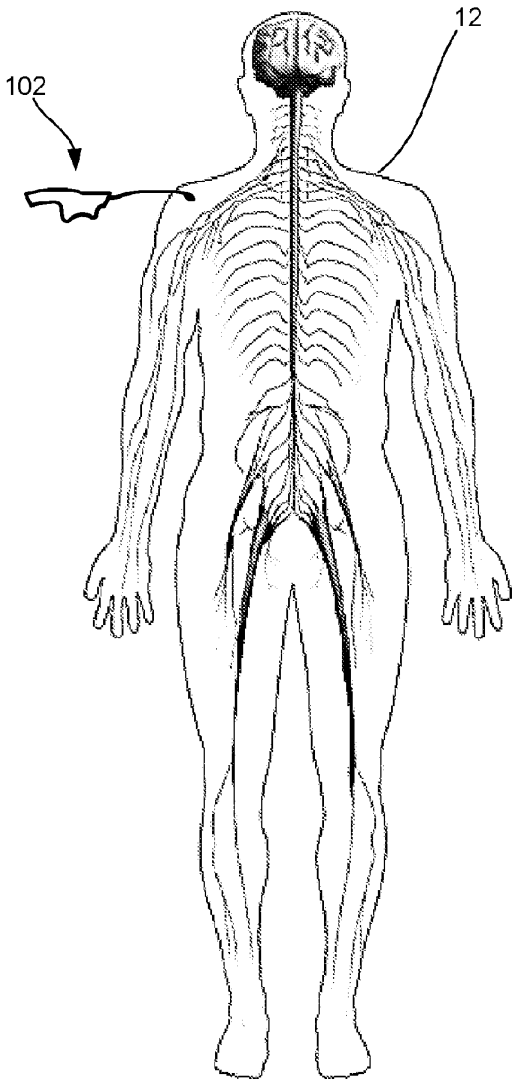
102
12

FIG. 1B

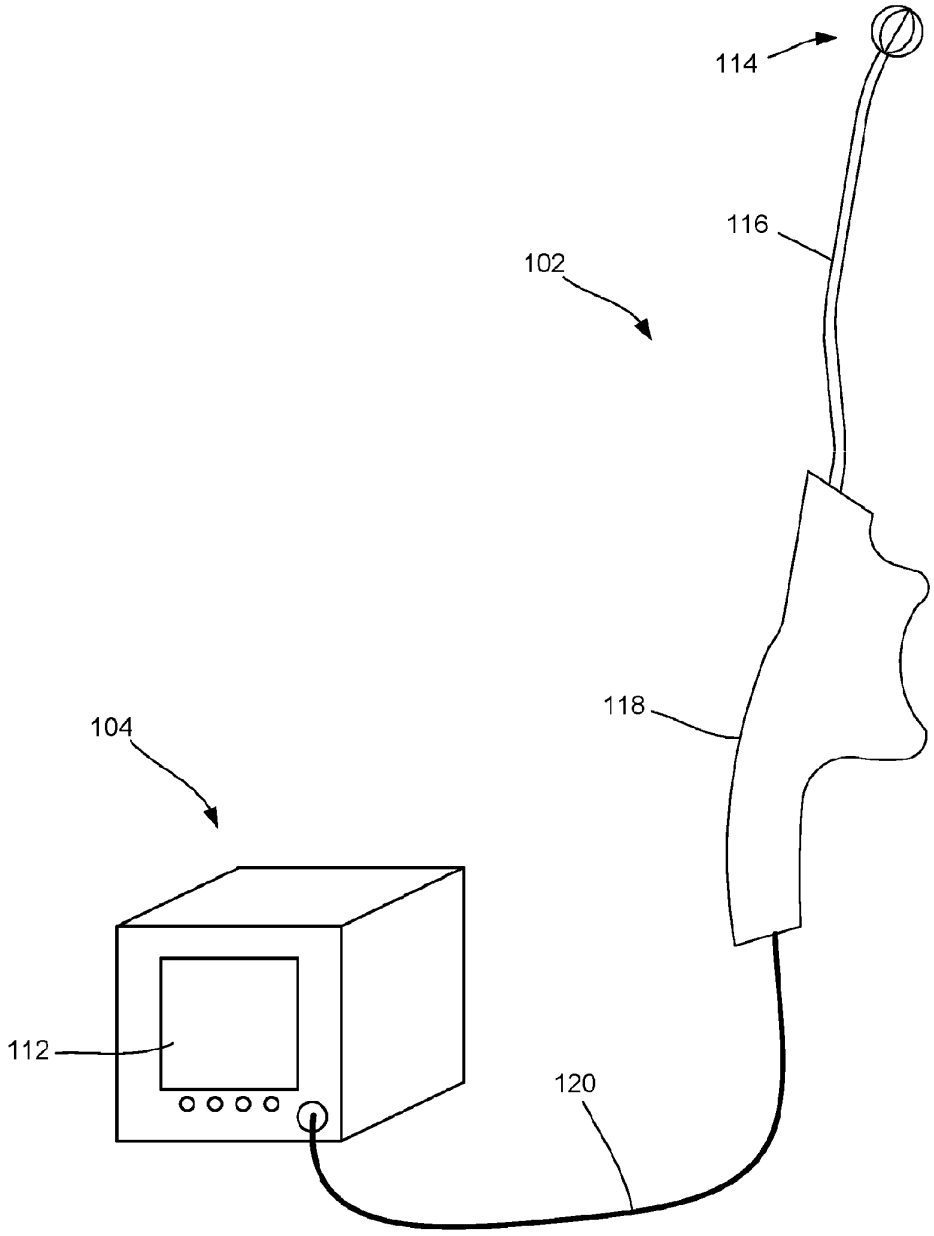

FIG. 2

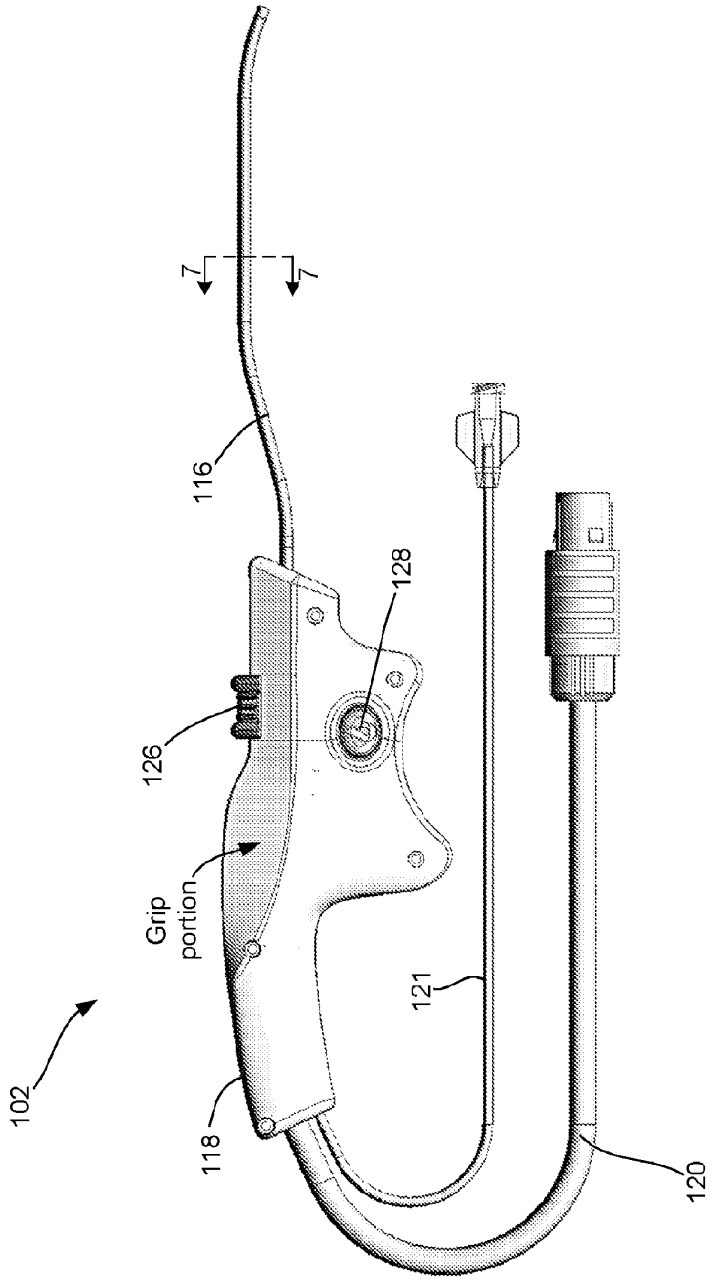

FIG. 3

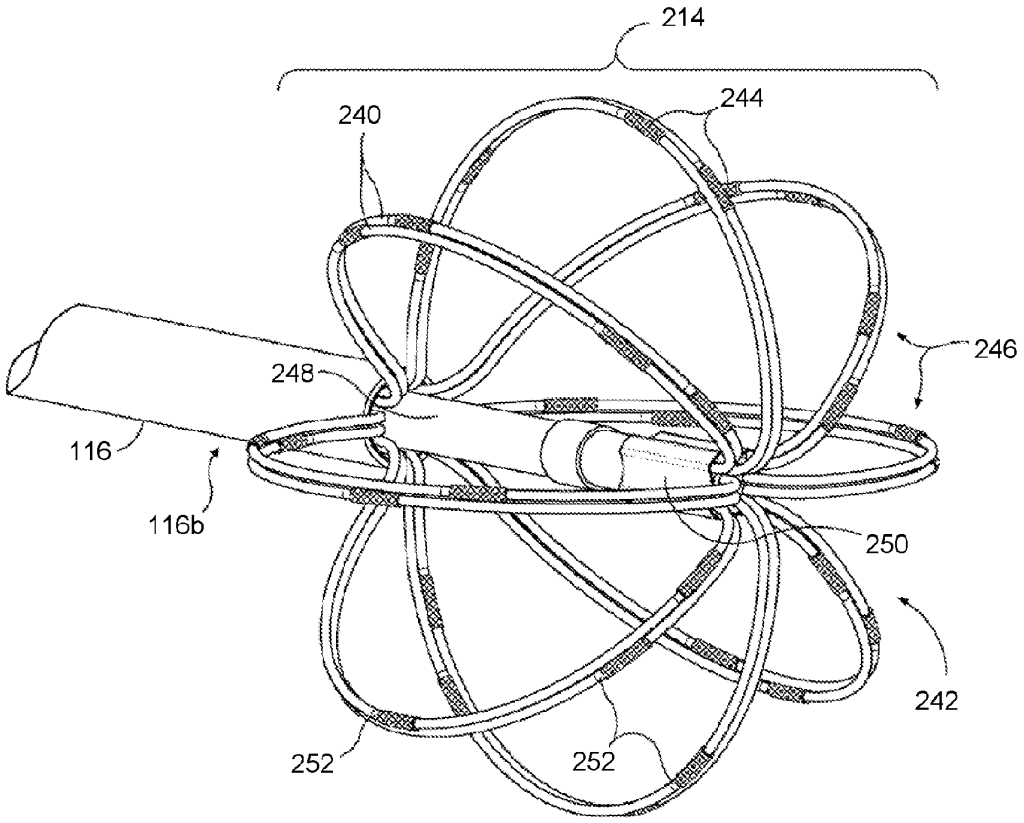

FIG. 4

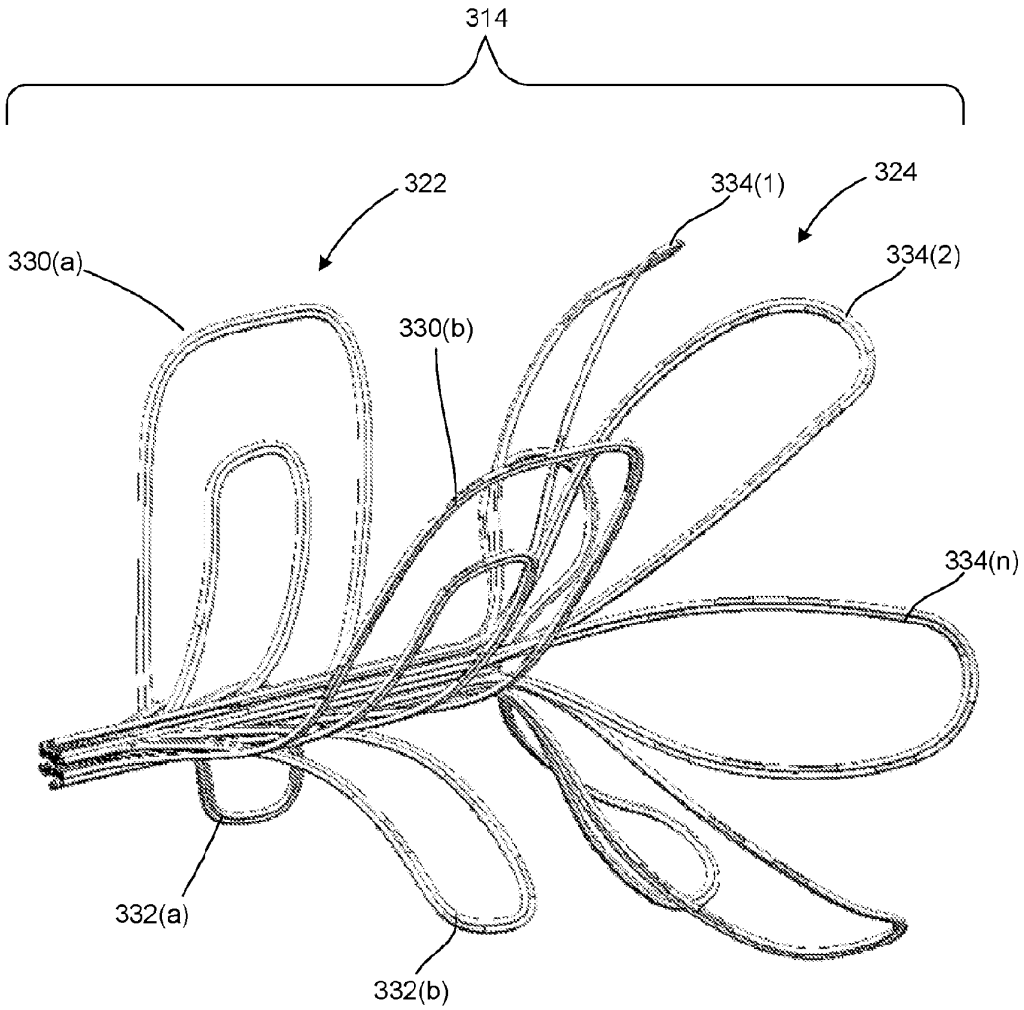

FIG. 5A

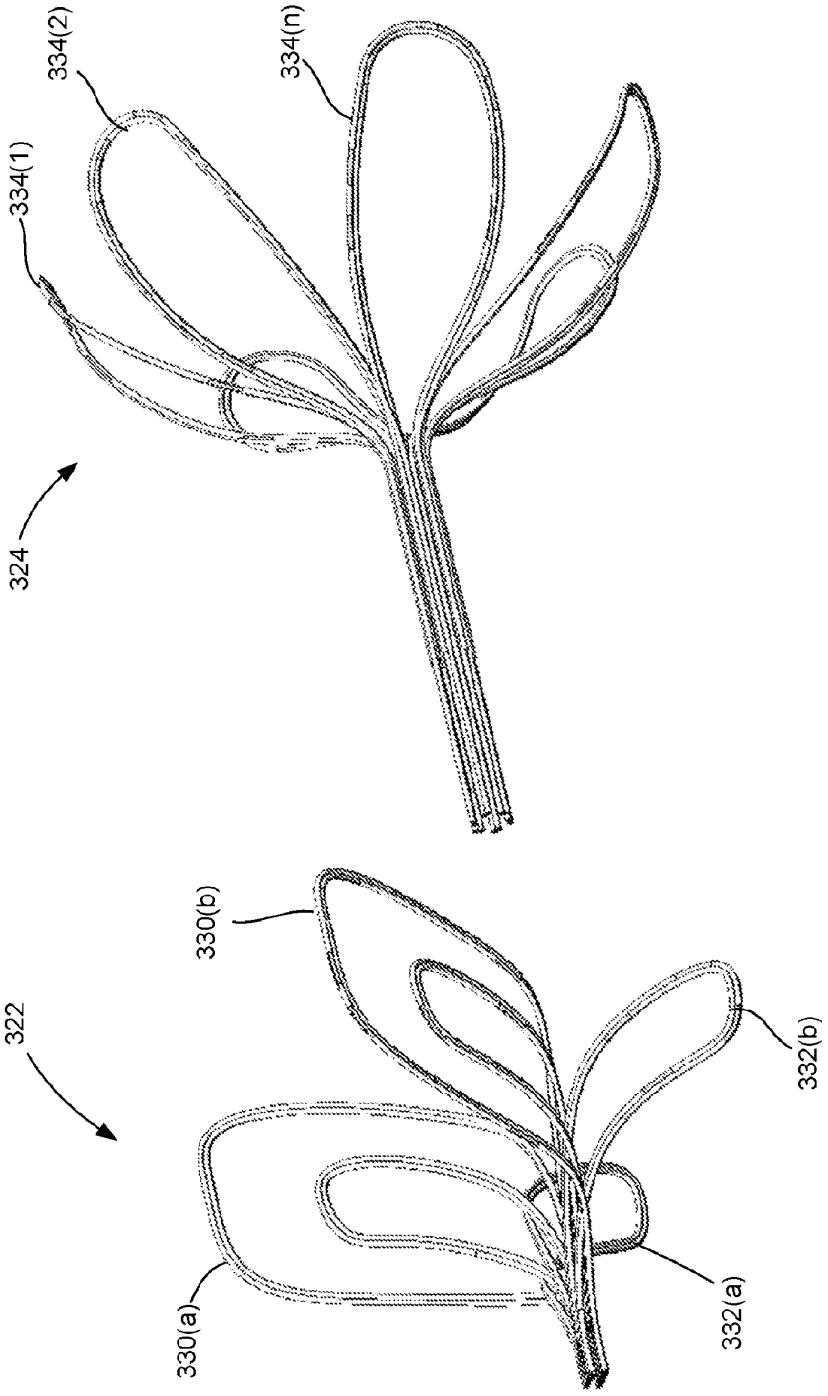

FIG. 5B

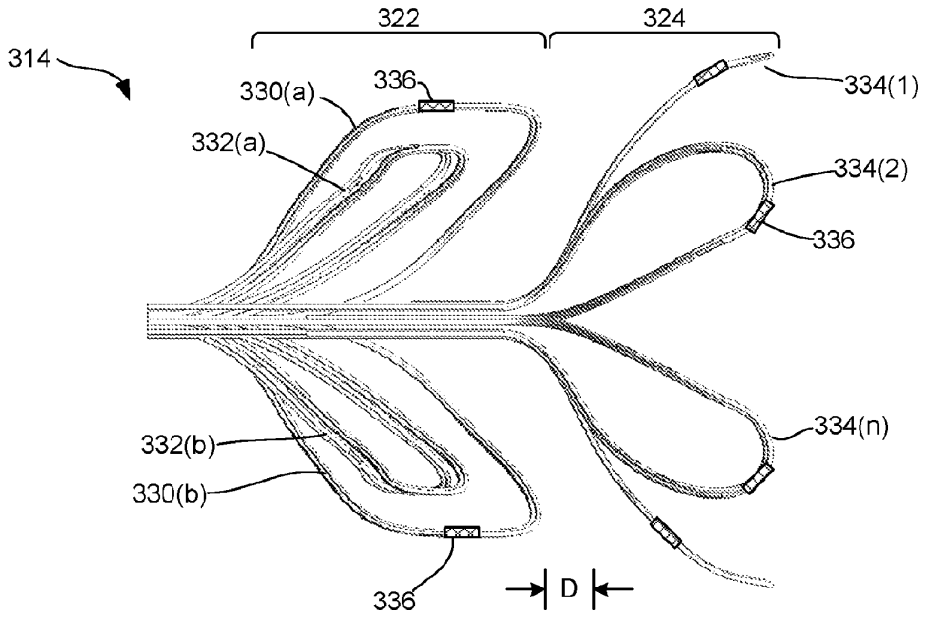
322
324
314
330(a)
336
334(1)
332(a)
334(2)
336
332(b)
334(n)
330(b)
336
D

FIG. 5C

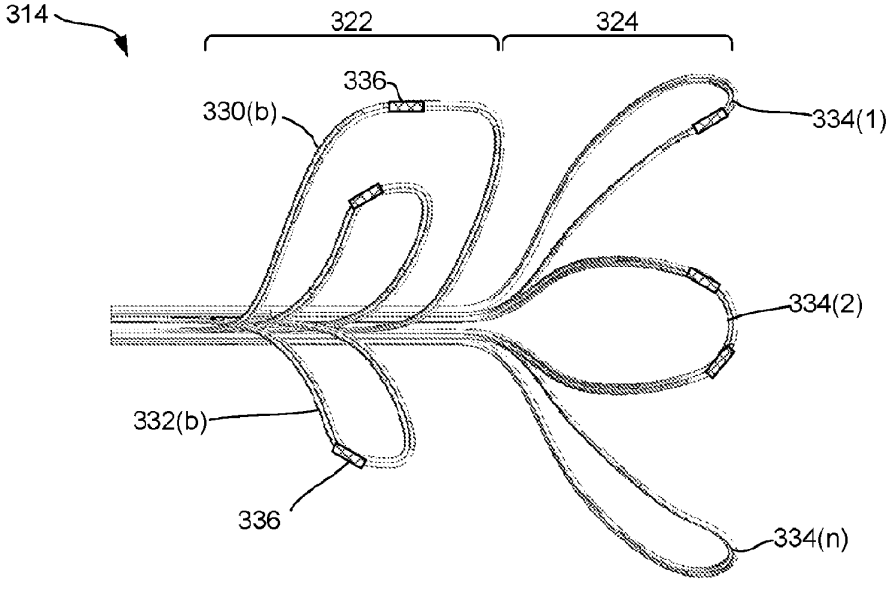
314
322
324
336
330(b)
334(1)
334(2)
332(b)
336
334(n)

FIG. 5D

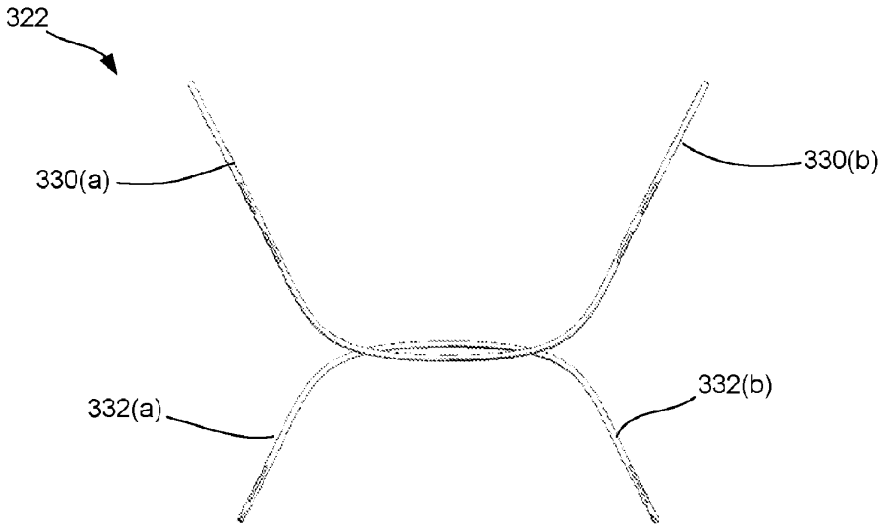

FIG. 5E

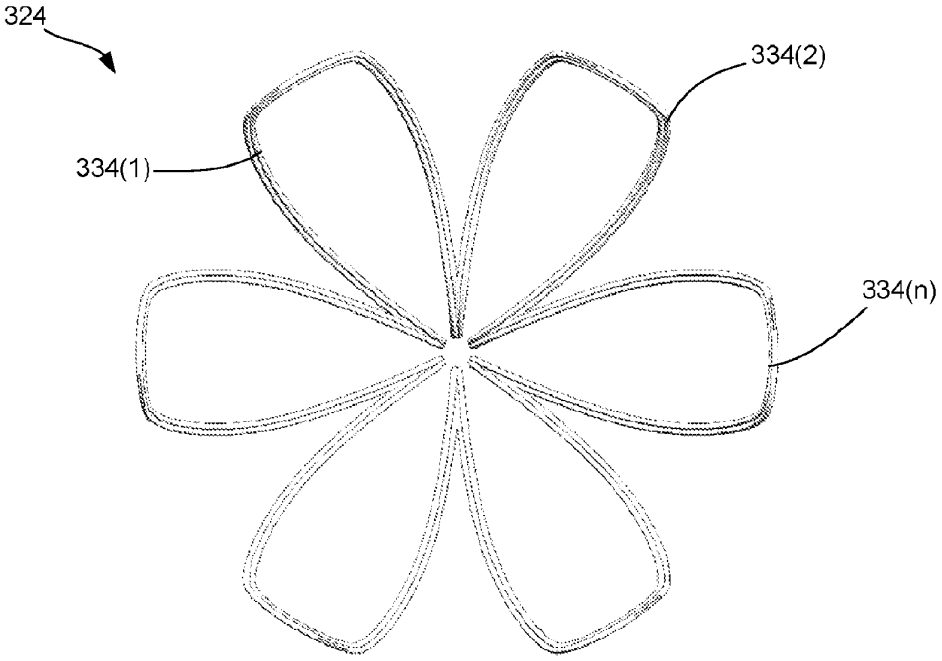

FIG. 5F

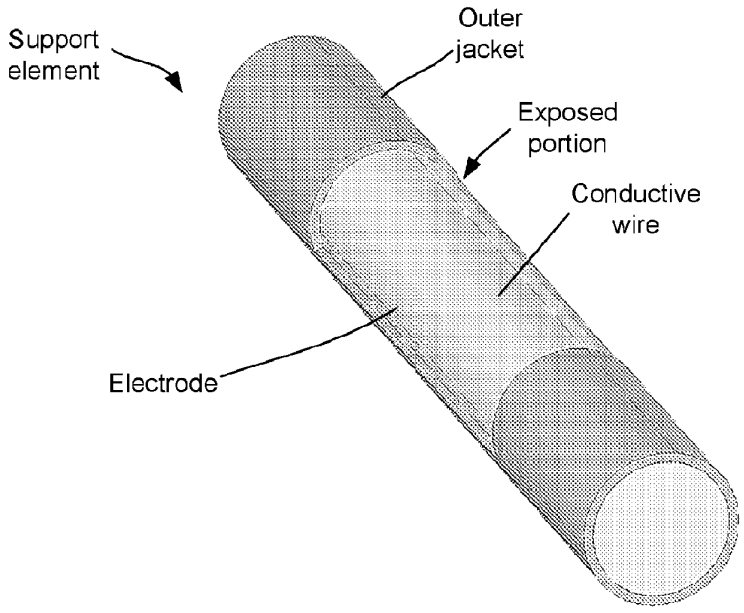
Support element
Outer jacket
Exposed portion
Conductive wire
Electrode

FIG. 6

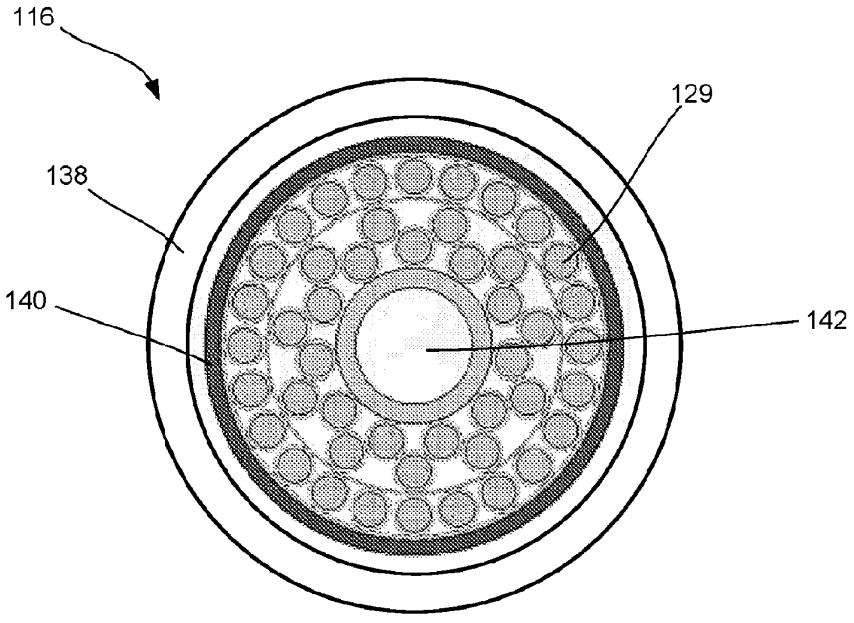
116
129
138
140
142

FIG. 7

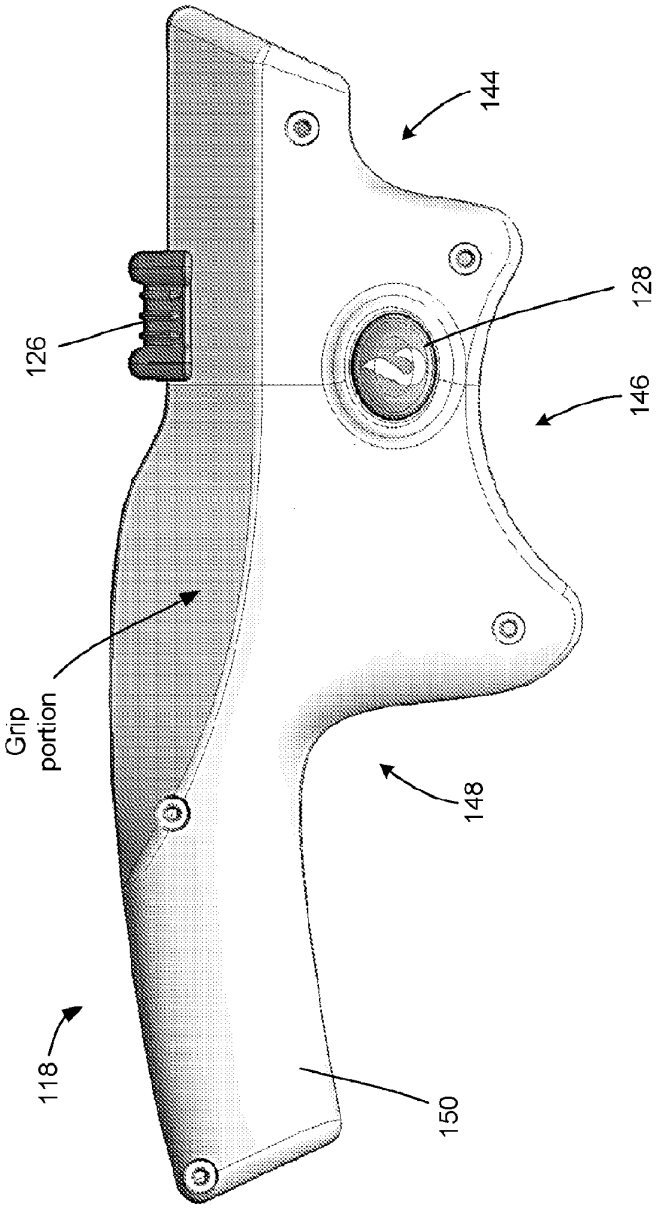

FIG. 8A

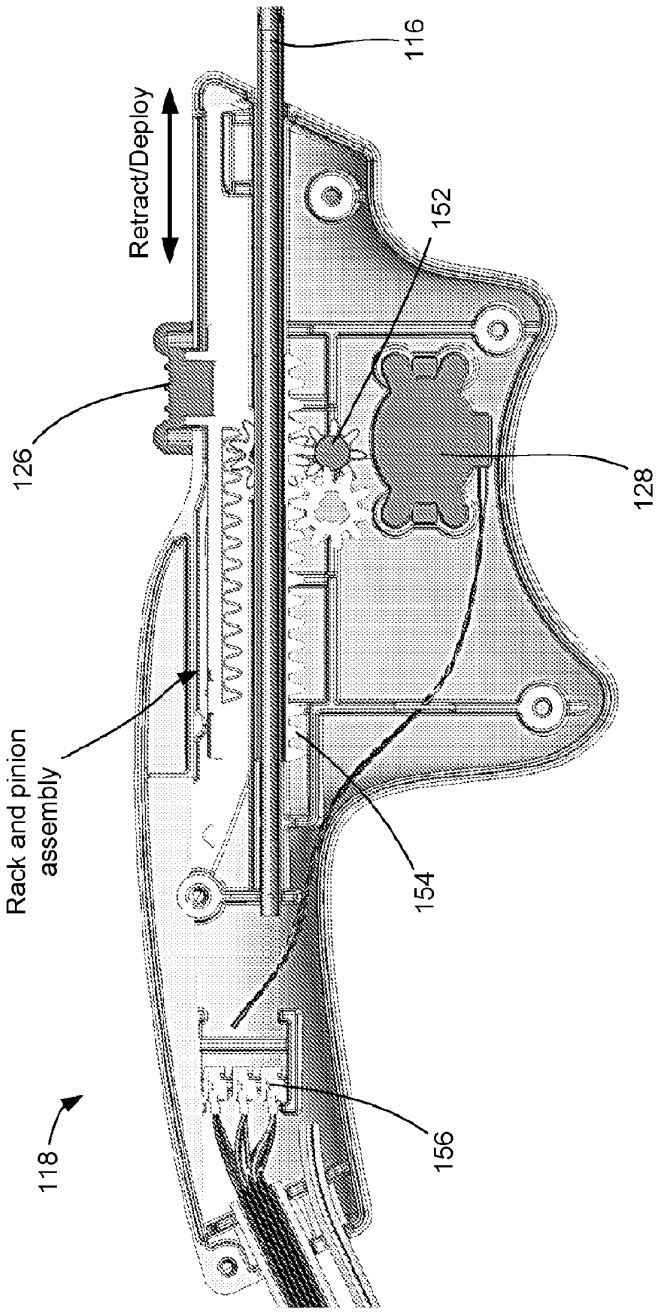
116
Retract/Deploy
152
126
128
Rack and pinion assembly
154
156
118

FIG. 8B

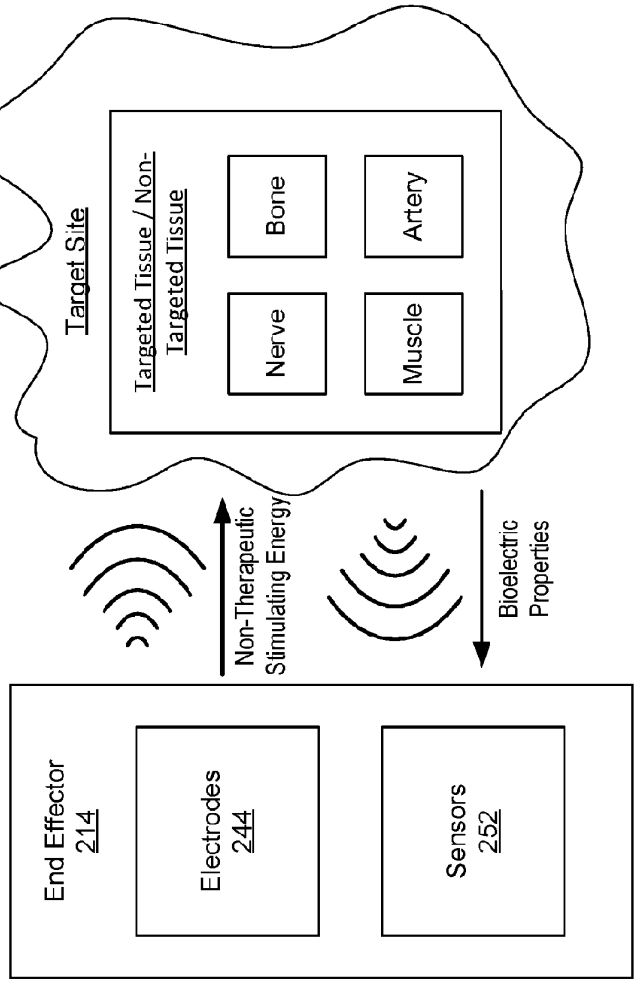
Target Site
Targeted Tissue / Non-Targeted Tissue
Nerve
Bone
Muscle
Artery
Non-Therapeutic Stimulating Energy
Bioelectric Properties
End Effector 214
Electrodes 244
Sensors 252

FIG. 9A

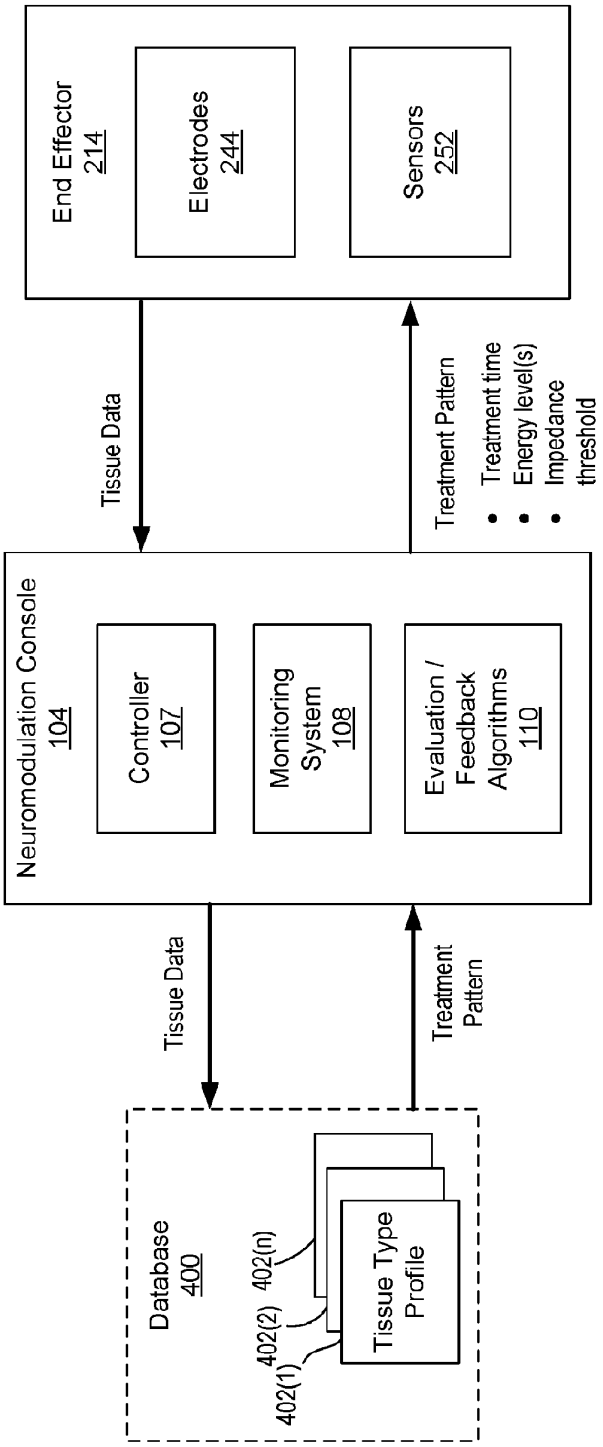
End Effector
214
Electrodes
244
Sensors
252
Tissue Data
Treatment Pattern
• Treatment time
• Energy level(s)
• Impedance threshold
Neuromodulation Console
104
Controller
107
Monitoring System
108
Evaluation / Feedback Algorithms
110
Tissue Data
Treatment Pattern
Database
400
402(n)
402(2)
402(1)
Tissue Type Profile

FIG. 9B

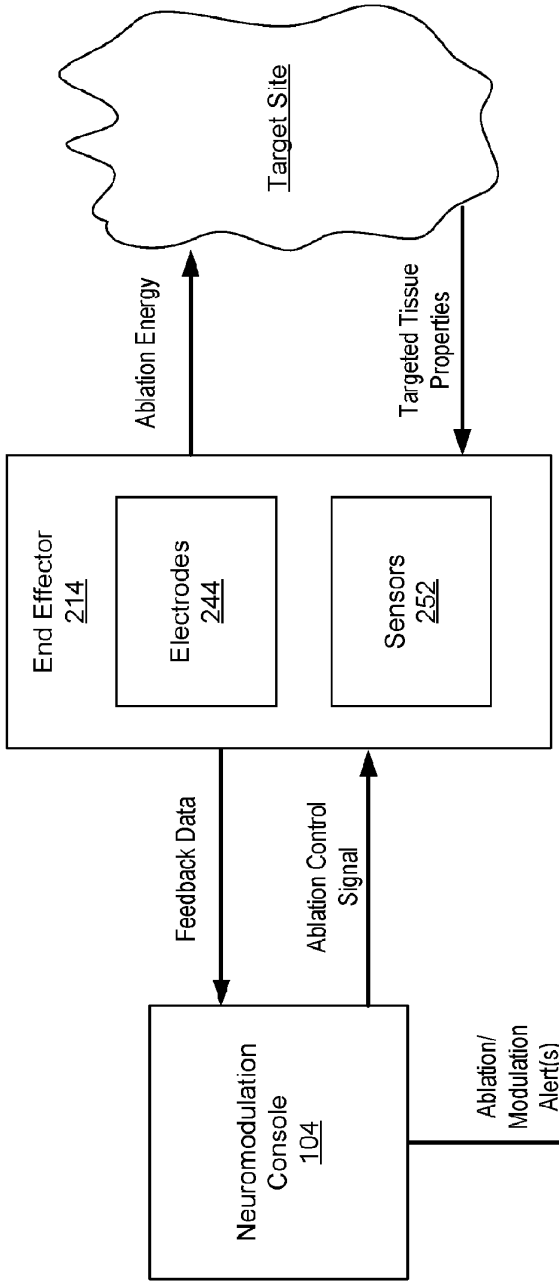
Target Site
Ablation Energy
Targeted Tissue Properties
End Effector 214
Electrodes 244
Sensors 252
Feedback Data
Ablation Control Signal
Neuromodulation Console 104
Ablation/ Modulation Alert(s)
Interface 112

FIG. 9C

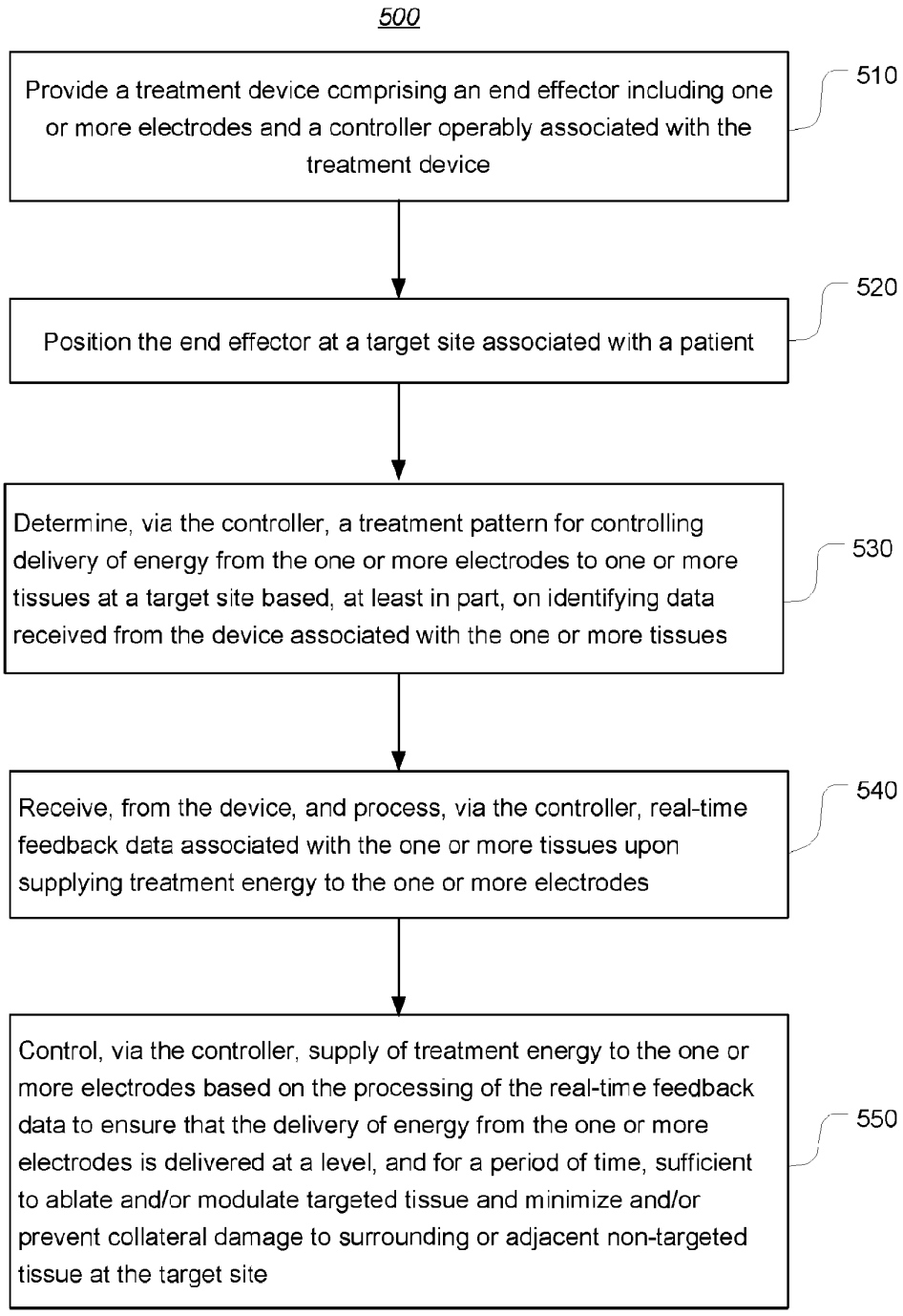
500
Provide a treatment device comprising an end effector including one or more electrodes and a controller operably associated with the treatment device
510
Position the end effector at a target site associated with a patient
520
Determine, via the controller, a treatment pattern for controlling delivery of energy from the one or more electrodes to one or more tissues at a target site based, at least in part, on identifying data received from the device associated with the one or more tissues
530
Receive, from the device, and process, via the controller, real-time feedback data associated with the one or more tissues upon supplying treatment energy to the one or more electrodes
540
Control, via the controller, supply of treatment energy to the one or more electrodes based on the processing of the real-time feedback data to ensure that the delivery of energy from the one or more electrodes is delivered at a level, and for a period of time, sufficient to ablate and/or modulate targeted tissue and minimize and/or prevent collateral damage to surrounding or adjacent non-targeted tissue at the target site
550

FIG. 10

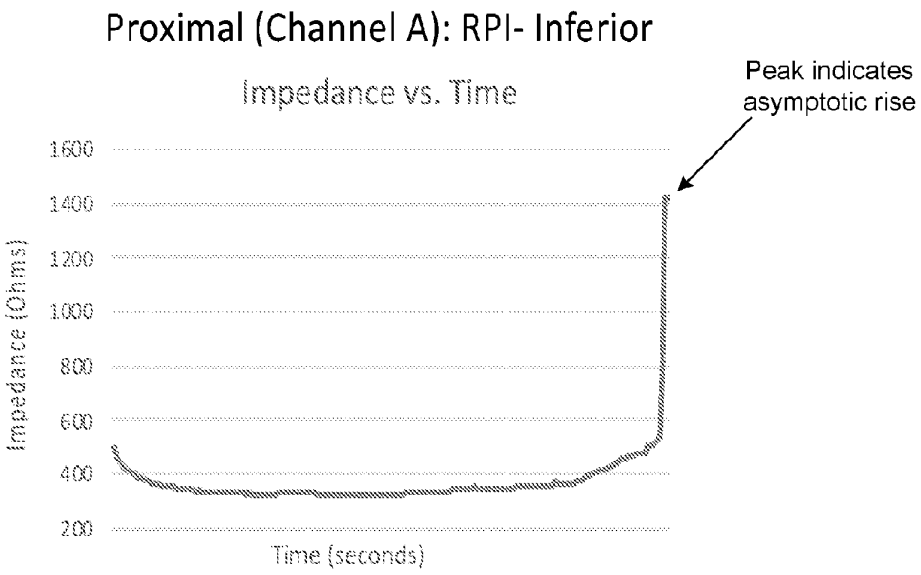

FIG. 11A

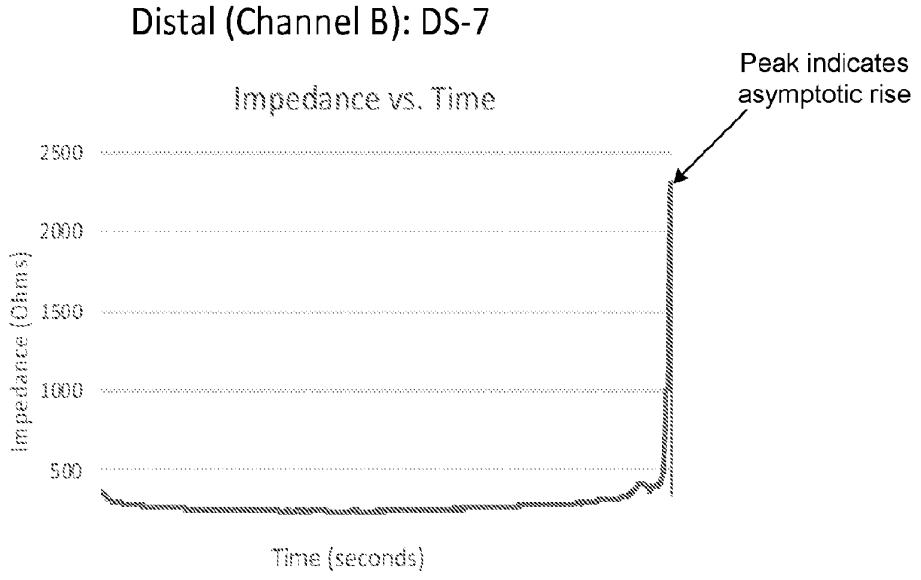

FIG. 11B

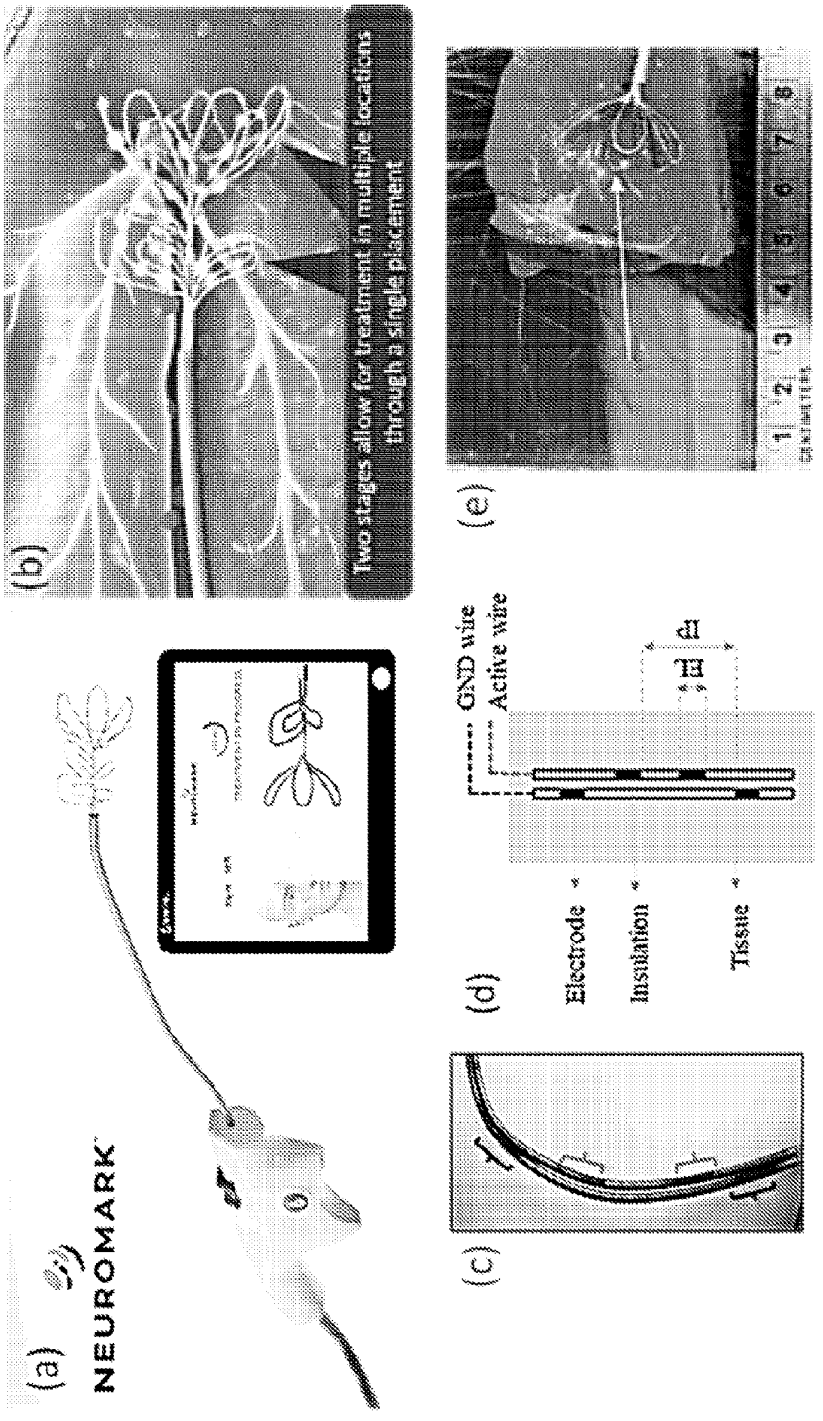
(a)
NEUROMARK
(b)
Two stages allow for treatment in multiple locations through a single placement
(c)
(d)
GND wire
Active wire
Electrode
Insulation
Tissue
d1
(e)

FIG. 12

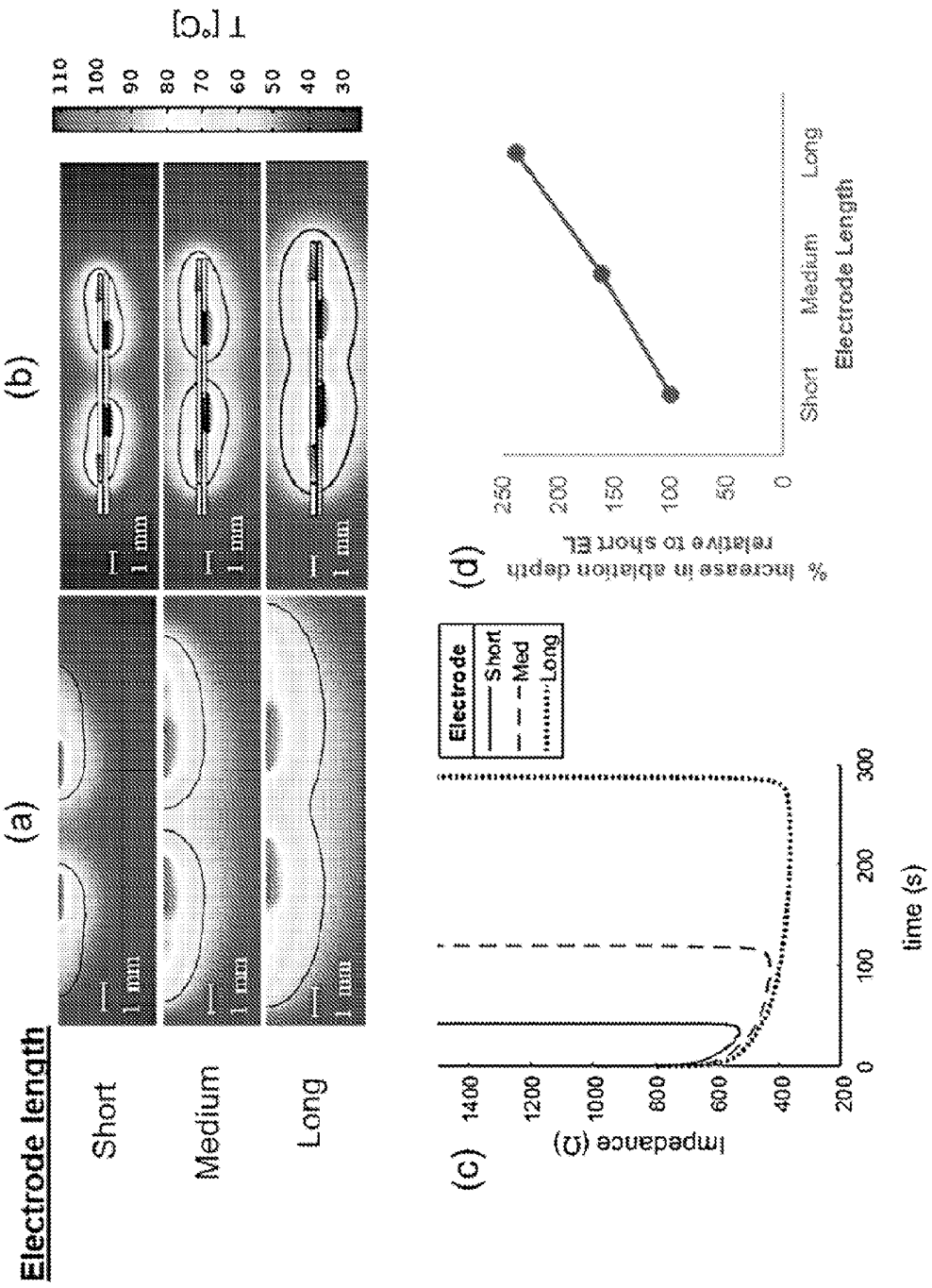
Electrode length
(a)
(b)
Short
Medium
Long
1 mm
T [°C]
110
100
90
80
70
60
50
40
30
(c)
Impedance (Ω)
1400
1200
1000
800
600
400
200
0
100
200
300
time (s)
Electrode
Short
Med
Long
(d)
% increase in ablation depth relative to short EL
250
200
150
100
50
0
Short
Medium
Long
Electrode Length

FIG. 13

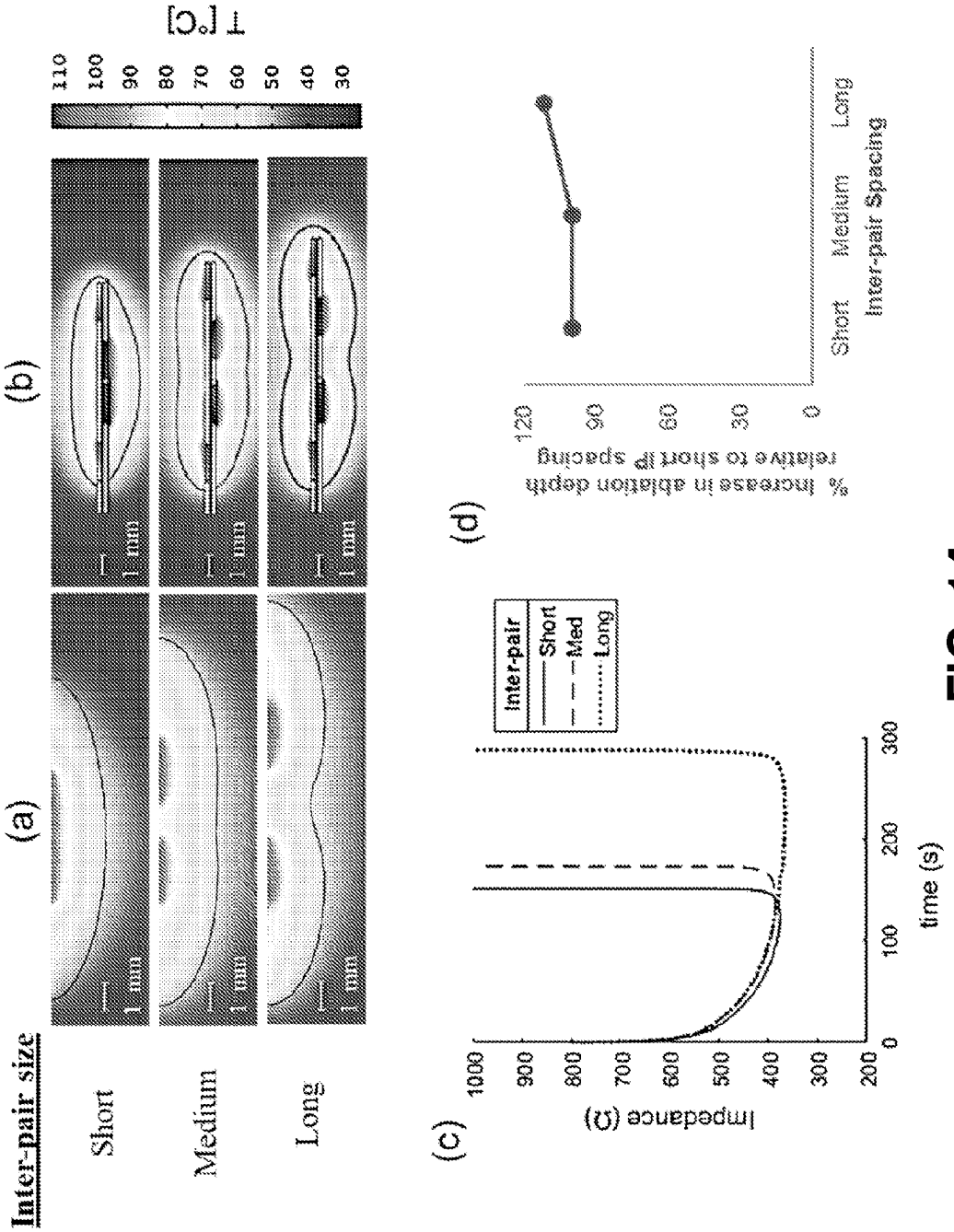
(a)
(b)
(c)
(d)
Inter-pair size
Short
Medium
Long
T [°C]
110
100
90
80
70
60
50
40
30
1 mm
Inter-pair
Short
Med
Long
Impedance (Ω)
time (s)
% increase in ablation depth relative to short IP spacing
Short
Medium
Long
Inter-pair Spacing

FIG. 14

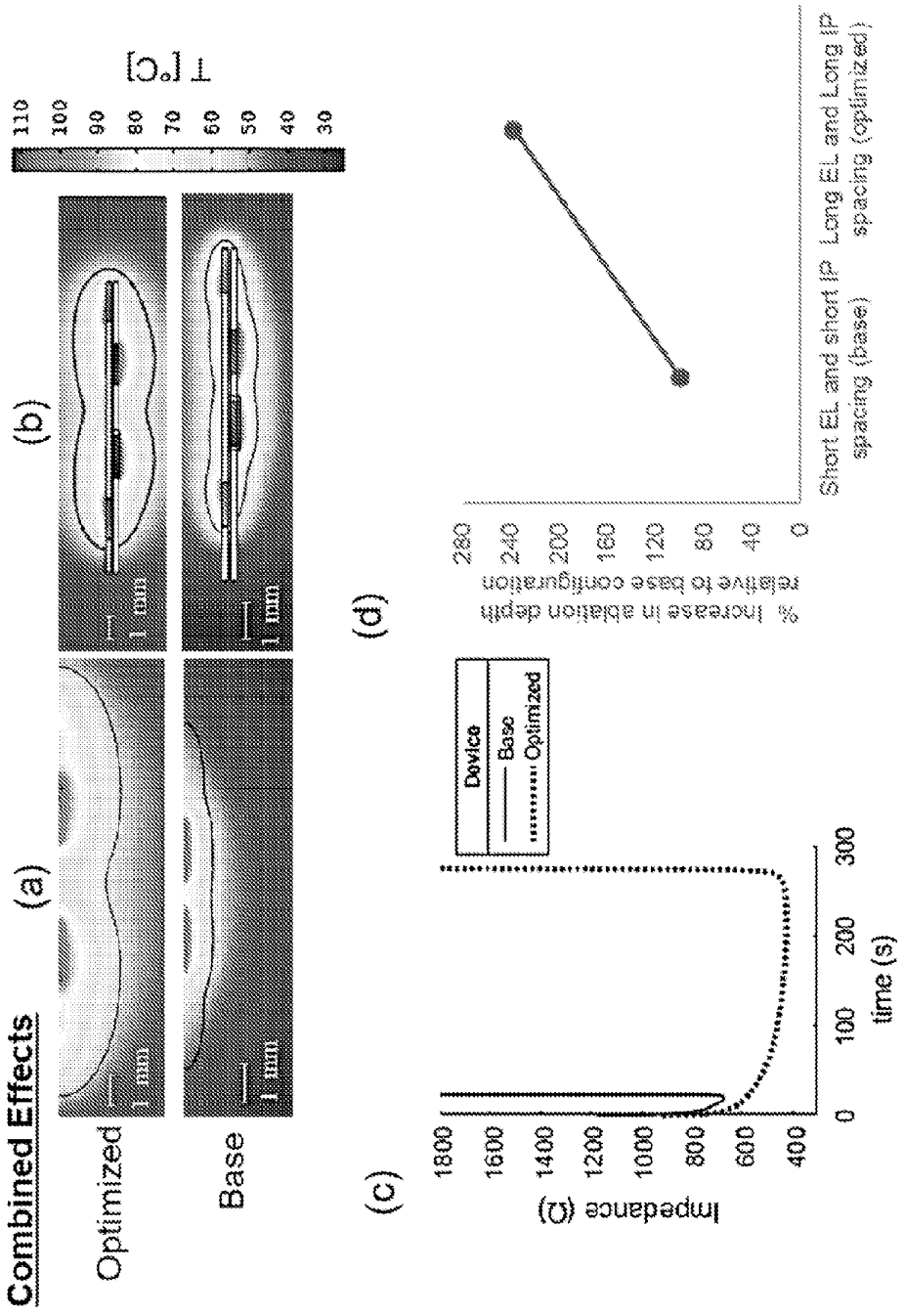
Combined Effects
(a)
(b)
(c)
(d)
Optimized
Base
T [°C]
110
100
90
80
70
60
50
40
30
Device
Base
Optimized
Impedance (Ω)
time (s)
% Increase in ablation depth relative to base configuration
Short EL and short IP spacing (base)
Long EL and Long IP spacing (optimized)

FIG. 15

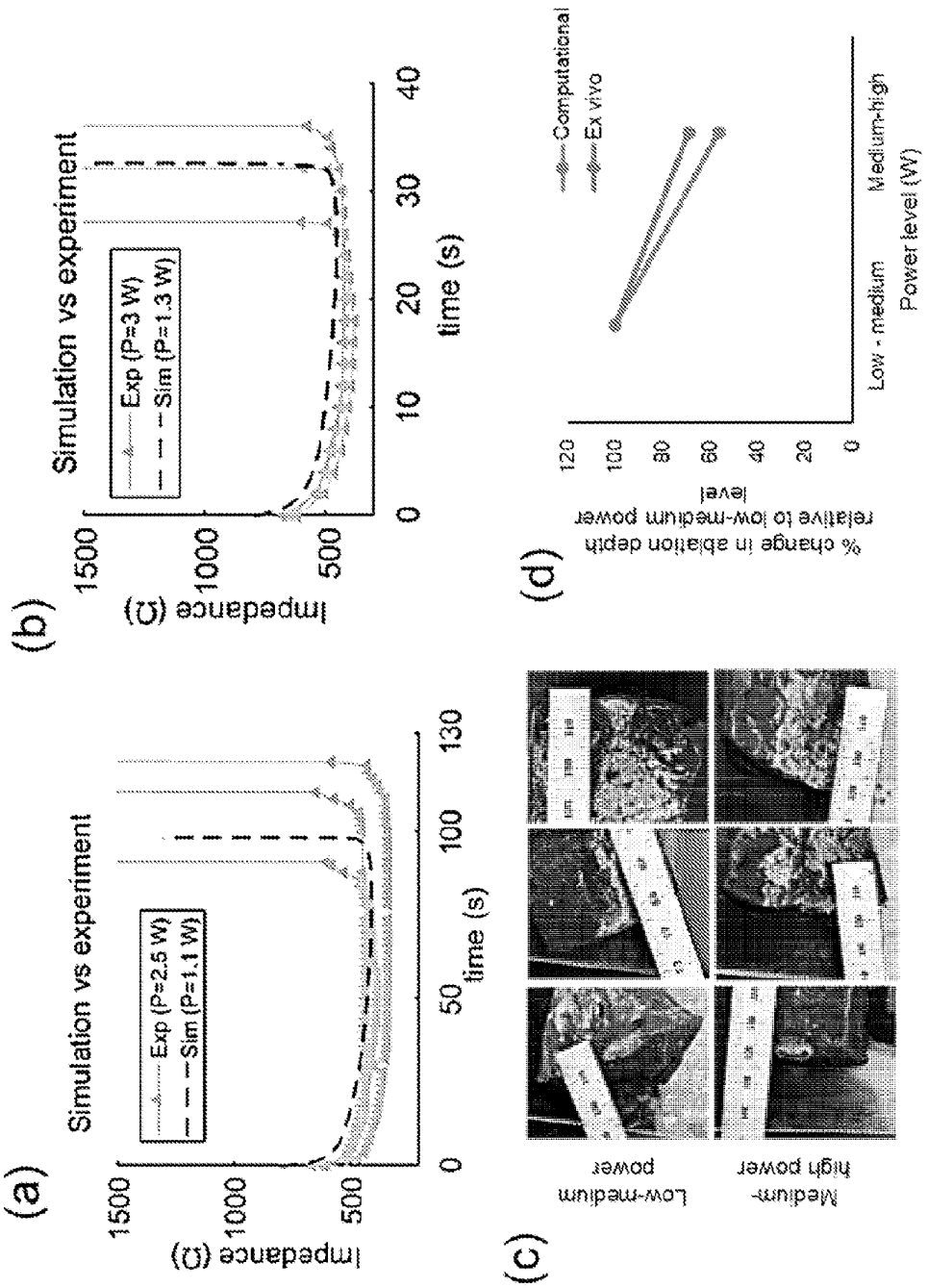
(a)
Simulation vs experiment
Exp (P=2.5 W)
Sim (P=1.1 W)
impedance (Ω)
1500
1000
500
0
50
100
130
time (s)
(b)
Simulation vs experiment
Exp (P=3 W)
Sim (P=1.3 W)
impedance (Ω)
1500
1000
500
0
10
20
30
40
time (s)
(c)
Low-medium power
Medium-high power
(d)
Computational
Ex vivo
% change in ablation depth relative to low-medium power level
120
100
80
60
40
20
0
Low - medium
Medium-high
Power level (W)

FIG. 16

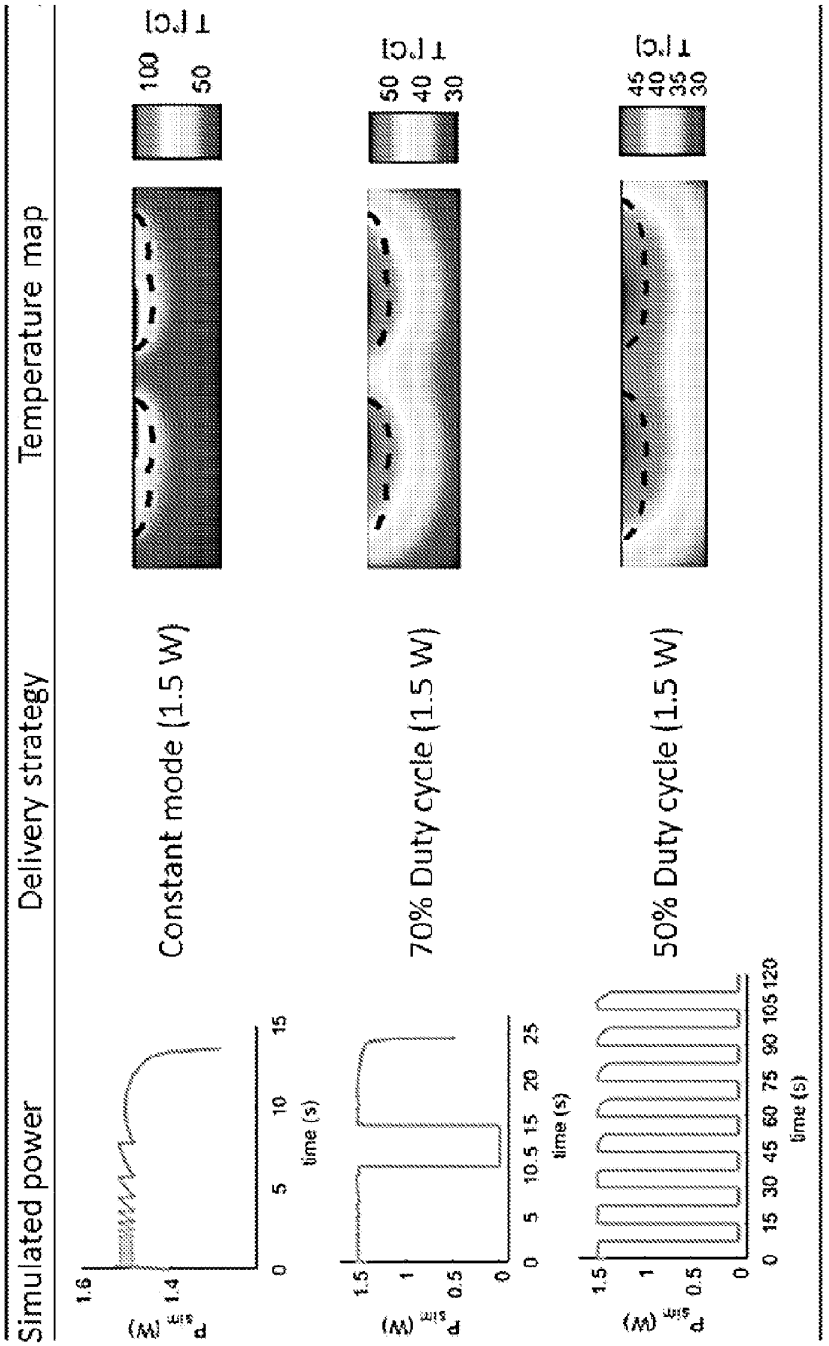
Simulated power
Delivery strategy
Temperature map
Constant mode (1.5 W)
70% Duty cycle (1.5 W)
50% Duty cycle (1.5 W)
T [°C]
100
50
50
40
30
45
40
35
30
P_{sim} (W)
1.6
1.4
1.5
1
0.5
0
time (s)
0 5 10 15
0 5 10.5 15 20 25
0 15 30 45 60 75 90 105 120

FIG. 17

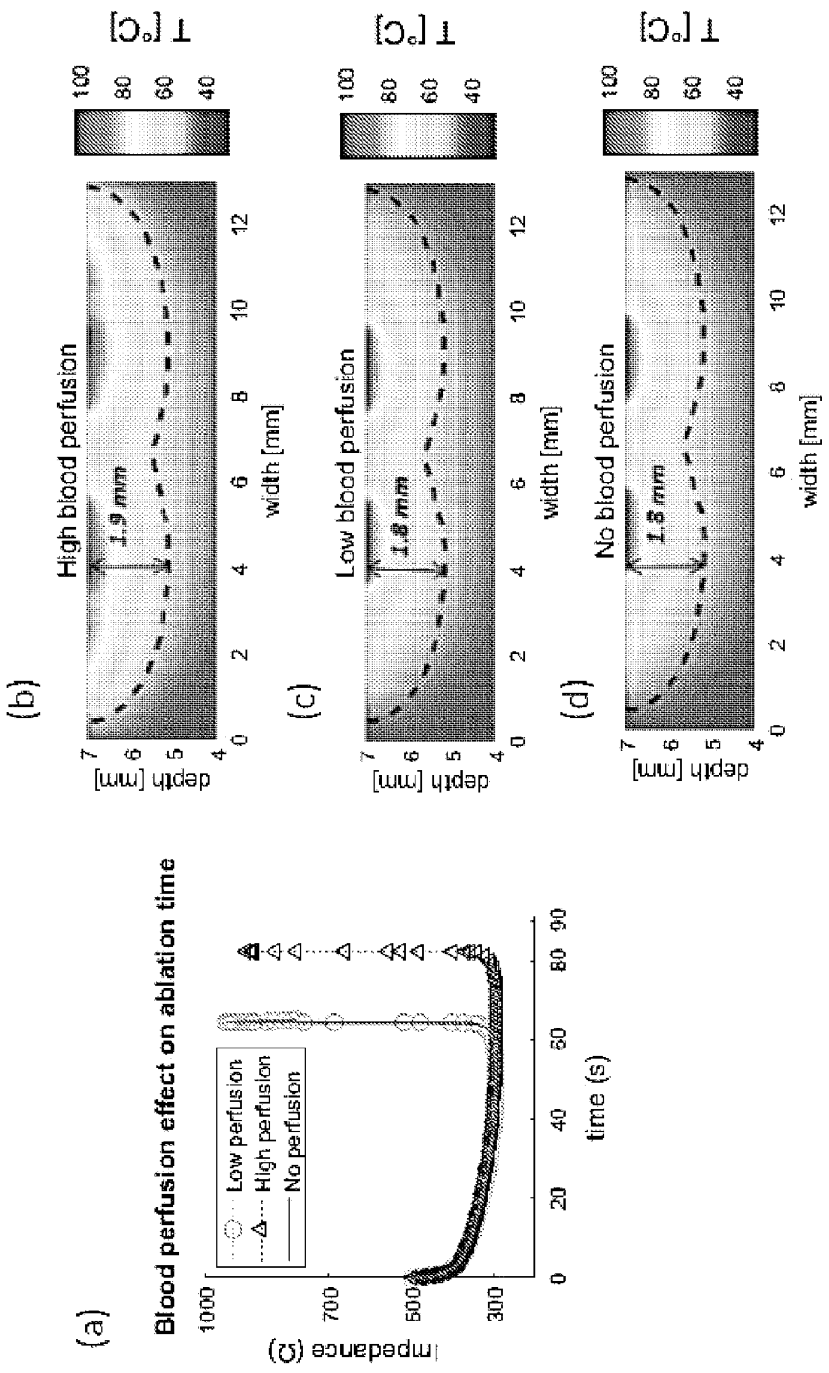
(a)
Blood perfusion effect on ablation time
Low perfusion
High perfusion
No perfusion
impedance (Ω)
time (s)
(b)
High blood perfusion
1.9 mm
depth [mm]
width [mm]
T [°C]
(c)
Low blood perfusion
1.8 mm
depth [mm]
width [mm]
T [°C]
(d)
No blood perfusion
1.8 mm
depth [mm]
width [mm]
T [°C]

FIG. 18

INTERNATIONAL SEARCH REPORT

International application No
PCT/IB2021/000441

A. CLASSIFICATION OF SUBJECT MATTER
INV. A61B18/12 A61B18/14 A61B34/35 A61N1/00 G06N20/00
ADD.

According to International Patent Classification (IPC) or to both national classification and IPC

B. FIELDS SEARCHED

Minimum documentation searched (classification system followed by classification symbols)
A61B A61N G06N

Documentation searched other than minimum documentation to the extent that such documents are included in the fields searched

Electronic data base consulted during the international search (name of data base and, where practicable, search terms used)
EPO-Internal

C. DOCUMENTS CONSIDERED TO BE RELEVANT

Category*	Citation of document, with indication, where appropriate, of the relevant passages	Relevant to claim No.
X	US 2018/133460 A1 (TOWNLEY DAVID [IE] ET AL) 17 May 2018 (2018-05-17) cited in the application paragraphs [0002], [0006] paragraph [0031]; figure 3a paragraph [0053] - paragraph [0058] paragraph [0079] paragraph [0037] - paragraph [0038] paragraph [0072] paragraph [0065] ----- -/--	1-13, 17-20

[X] Further documents are listed in the continuation of Box C.

[X] See patent family annex.

* Special categories of cited documents :

"A" document defining the general state of the art which is not considered to be of particular relevance

"E" earlier application or patent but published on or after the international filing date

"L" document which may throw doubts on priority claim(s) or which is cited to establish the publication date of another citation or other special reason (as specified)

"O" document referring to an oral disclosure, use, exhibition or other means

"P" document published prior to the international filing date but later than the priority date claimed

"T" later document published after the international filing date or priority date and not in conflict with the application but cited to understand the principle or theory underlying the invention

"X" document of particular relevance; the claimed invention cannot be considered novel or cannot be considered to involve an inventive step when the document is taken alone

"Y" document of particular relevance; the claimed invention cannot be considered to involve an inventive step when the document is combined with one or more other such documents, such combination being obvious to a person skilled in the art

"&" document member of the same patent family

Date of the actual completion of the international search	Date of mailing of the international search report
5 November 2021	16/11/2021

Name and mailing address of the ISA/	Authorized officer
European Patent Office, P.B. 5818 Patentlaan 2 NL - 2280 HV Rijswijk Tel. (+31-70) 340-2040, Fax: (+31-70) 340-3016	Ekstrand, Vilhelm

Form PCT/ISA/210 (second sheet) (April 2005)

INTERNATIONAL SEARCH REPORT

International application No
PCT/IB2021/000441

C(Continuation). DOCUMENTS CONSIDERED TO BE RELEVANT

Category*	Citation of document, with indication, where appropriate, of the relevant passages	Relevant to claim No.
X	EP 1 151 725 A1 (ETHICON ENDO SURGERY [US]) 7 November 2001 (2001-11-07) paragraph [0004] paragraph [0002] paragraph [0034] - paragraph [0037]; figures 1,10 paragraph [0066] - paragraph [0076]; figures 6-9 paragraph [0010]	1,9-20
X	US 2017/000541 A1 (YATES DAVID C [US] ET AL) 5 January 2017 (2017-01-05) paragraph [0283] - paragraph [0286]; figure 47 paragraph [0144]; figure 1 paragraph [0317] - paragraph [0318] paragraph [0240]; figure 30 paragraph [0342] paragraph [0287] - paragraph [0289]; figure 48 paragraph [0428] - paragraph [0429]; figure 89	1-13,15, 16,19,20
E	WO 2021/205231 A1 (NEURENT MEDICAL LTD [IE]) 14 October 2021 (2021-10-14) page 14, line 8 - page 15, line 30; figures 1,2 page 38, line 21 - page 45, line 5; figure 9a page 45, line 6; figure 9b page 51, line 17 - page 54, line 15; figure 9c page 55, line 4 - line 13	1-12,19, 20
A	US 2017/215952 A1 (NAIR ANUJA [US]) 3 August 2017 (2017-08-03) paragraph [0093]; figure 3	8

Form PCT/ISA/210 (continuation of second sheet) (April 2005)

INTERNATIONAL SEARCH REPORT

International application No.
PCT/IB2021/000441

Box No. II Observations where certain claims were found unsearchable (Continuation of item 2 of first sheet)

This international search report has not been established in respect of certain claims under Article 17(2)(a) for the following reasons:

1. [X] Claims Nos.: 21-40
because they relate to subject matter not required to be searched by this Authority, namely:

see FURTHER INFORMATION sheet PCT/ISA/210

2. [ ] Claims Nos.:
because they relate to parts of the international application that do not comply with the prescribed requirements to such an extent that no meaningful international search can be carried out, specifically:

3. [ ] Claims Nos.:
because they are dependent claims and are not drafted in accordance with the second and third sentences of Rule 6.4(a).

Box No. III Observations where unity of invention is lacking (Continuation of item 3 of first sheet)

This International Searching Authority found multiple inventions in this international application, as follows:

1. [ ] As all required additional search fees were timely paid by the applicant, this international search report covers all searchable claims.

2. [ ] As all searchable claims could be searched without effort justifying an additional fees, this Authority did not invite payment of additional fees.

3. [ ] As only some of the required additional search fees were timely paid by the applicant, this international search report covers only those claims for which fees were paid, specifically claims Nos.:

4. [ ] No required additional search fees were timely paid by the applicant. Consequently, this international search report is restricted to the invention first mentioned in the claims; it is covered by claims Nos.:

Remark on Protest

[ ] The additional search fees were accompanied by the applicant's protest and, where applicable, the payment of a protest fee.

[ ] The additional search fees were accompanied by the applicant's protest but the applicable protest fee was not paid within the time limit specified in the invitation.

[ ] No protest accompanied the payment of additional search fees.

FURTHER INFORMATION CONTINUED FROM PCT/ISA/ 210

Continuation of Box II.1

Claims Nos.: 21-40

Claim 21 refer to a method of treatment and includes the step "supply of treatment energy to the one or more electrodes based on the processing of the real-time feedback data to ensure that the delivery of energy from the one or more electrodes is delivered at a level, and for a period of time, sufficient to ablate and/or modulate targeted tissue", which is performed on the human body (cl1: "positioning the end effector at a target site associated with a patient"). Thus, claims 21-40 refer to methods of treating the human body by surgery and therapy. According to Rule 39.1 (iv) PCT and to Art 43bis.1 PCT as well as Rule 67.1 PCT, neither a search nor an international preliminary examination is required to be carried out on these claims.

INTERNATIONAL SEARCH REPORT

Information on patent family members

International application No
PCT/IB2021/000441

Patent document cited in search report	Publication date	Patent family member(s)	Publication date
US 2018133460 A1	17-05-2018	AU 2017357869 A1	06-06-2019
		CA 3041440 A1	17-05-2018
		CN 110191674 A	30-08-2019
		EP 3537954 A1	18-09-2019
		JP 2019535386 A	12-12-2019
		US 2018133460 A1	17-05-2018
		US 2020086112 A1	19-03-2020
		US 2020101283 A1	02-04-2020
		US 2020171302 A1	04-06-2020
		WO 2018087601 A1	17-05-2018
EP 1151725 A1	07-11-2001	AT 239920 T	15-05-2003
		AU 3179795 A	04-04-1996
		CA 2158783 A1	24-03-1996
		DE 69530646 T2	25-03-2004
		EP 0703461 A2	27-03-1996
		EP 1151725 A1	07-11-2001
		ES 2198433 T3	01-02-2004
		JP 3857337 B2	13-12-2006
		JP H08196543 A	06-08-1996
		US 5558671 A	24-09-1996
US 2017000541 A1	05-01-2017	BR 112017028508 A2	28-08-2018
		CN 107847262 A	27-03-2018
		JP 6869906 B2	12-05-2021
		JP 2018519919 A	26-07-2018
		JP 2021065727 A	30-04-2021
		US 2017000541 A1	05-01-2017
		US 2017000554 A1	05-01-2017
		US 2020222111 A1	16-07-2020
WO 2021205231 A1	14-10-2021	US 2021315638 A1	14-10-2021
		WO 2021205231 A1	14-10-2021
US 2017215952 A1	03-08-2017	US 2014180273 A1	26-06-2014
		US 2017215952 A1	03-08-2017

Aerin Exhibit 1011, Page 548 of 2183
Aerin Medical Inc. v. Neurent Medical Ltd.
IPR2025-01126