Docusign Envelope ID: F2AC5118-C68A-4644-ABD5-897CFD6B4554

the raised floor **14**. Ex. 1006, 13:1–7. An exemplary flow diagram of this method is shown in Figure 3B of Patel, provided below.

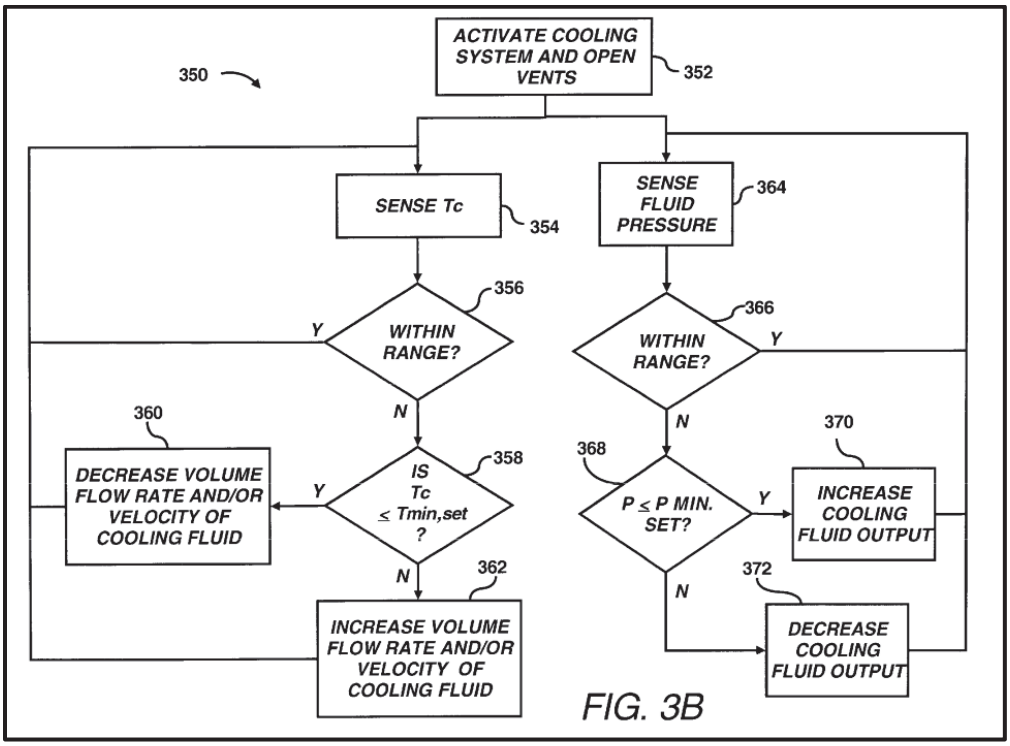

Ex. 1006, FIG. 3B.

115. Patel also mentions the known practice of numerically modeling the cooling requirements of data centers "by operation of any reasonably suitable commercially available computational fluid dynamics (CFD) tool, e.g., FLOVENT." Ex. 1006, 13:55–60. "By virtue of the numerical modeling, various air conditioning units as well as the vents . . . may be positioned throughout the data center to substantially control the manner in which the racks receive the cooling fluid. In addition, the air conditioning units may also be positioned to substantially maximize and optimize their performances." Ex. 1006, 13:60–66.

Docusign Envelope ID: F2AC5118-C68A-4644-ABD5-897CFD6B4554

116. Additional details about the disclosures of Patel are set forth in Section IX below.

C. Bishop

117. U.S. Patent Application Publication No. 2002/0149911 ("Bishop") was published on October 17, 2002, and the underlying Patent Application (No. 09/833,722) was filed on April 12, 2001. Ex. 1008, cover. Bishop is directed to "air cooling systems for electronic equipment and more specifically to a plenum based system for delivering coo[l]ing air to an electronic equipment cabinet." Ex. 1008, [0003].

118. Bishop explains that, prior to Bishop's filing date (and therefore prior to the filing date of the '179 patent), "many companies locate racks of computer servers and other electronic modules in special 'critical environment' computing and warehousing rooms" (i.e., data centers) to meet their computing and database needs. Ex. 1008, [0005]. One problem with storing so many electronic modules in one location is that "during operation, electronic modules generate heat," and if the "generated heat is not dissipated quickly enough, the heat can cause the [electronic] module[s] to malfunction or, when extreme, can destroy the [electronic] modules." Ex. 1008, [0009].

119. Thus, Bishop explains that the "industry has developed several different ways in which to cool electronic modules," such as using fans to "draw air

Docusign Envelope ID: F2AC5118-C68A-4644-ABD5-897CFD6B4554

. . . over the heat generating devices." Ex. 1008, [0010]. Another way of cooling racks in a data center that was known prior to the filing date of Bishop "has been to raise the floor in the environment so that a space exists below the surface that supports the module cabinets. Then cooling air is pumped through floor tiles into the critical environment. Environment temperature is then monitored at various locations and the cooling air temperature and/or volume is adjusted to maintain the environment at the desired temperature." Ex. 1008, [0012].

120. As another example of a cooling solution that was known prior to the filing date of Bishop, Bishop discusses meeting the individualized cooling needs of various locations in a data center by "identify[ing] temperatures throughout a critical environment at relatively small spatial intervals and then adjust[ing] air flow through baffled raised floor tiles within the environment to even out environment temperature." Ex. 1008, [0017].

121. Yet another known solution mentioned by Bishop is to "provide cabinet monitoring equipment including temperature sensors inside cabinet housings that are linked to a processor. The processor can then monitor temperature in the cabinets and generate an alarm when the temperature inside any given cabinet exceeds some threshold level. In this way IT personnel are alerted when the temperature within a cabinet is dangerously high and can take steps to remedy the problem." Ex. 1008, [0018].

Docusign Envelope ID: F2AC5118-C68A-4644-ABD5-897CFD6B4554

122. Bishop also discusses U.S. Patent No. 6,188,189 (Ex. 1009, "Blake"), which issued on February 13, 2001, as another example of a known cooling scheme. Ex. 1008, [0029]. In the localized cooling scheme of Blake, temperatures are measured by a plurality of temperature sensors. Ex. 1009, 10:37–40. As can be seen with reference to Figure 6 of Blake, provided below, "[i]f [one of] the sensed temperature[s] is less than the minimum temperature value (step **606**), the corresponding cooling fan is simply stopped (step **607**). If the measured temperature exceed[s] the critical temperature (step **608**), the corresponding fan is allowed to continue full speed operation (step **609**). Otherwise, in the subsequent operation **610**, pulse width (or duty cycle, if you will) is computed for each fan based upon the measured temperature), and the fan speed is set accordingly (step **611**)." Ex. 1009, 10:23–31.

Vertiv Ex. 1002
Vertiv v. Valtrus

Docusign Envelope ID: F2AC5118-C68A-4644-ABD5-897CFD6B4554

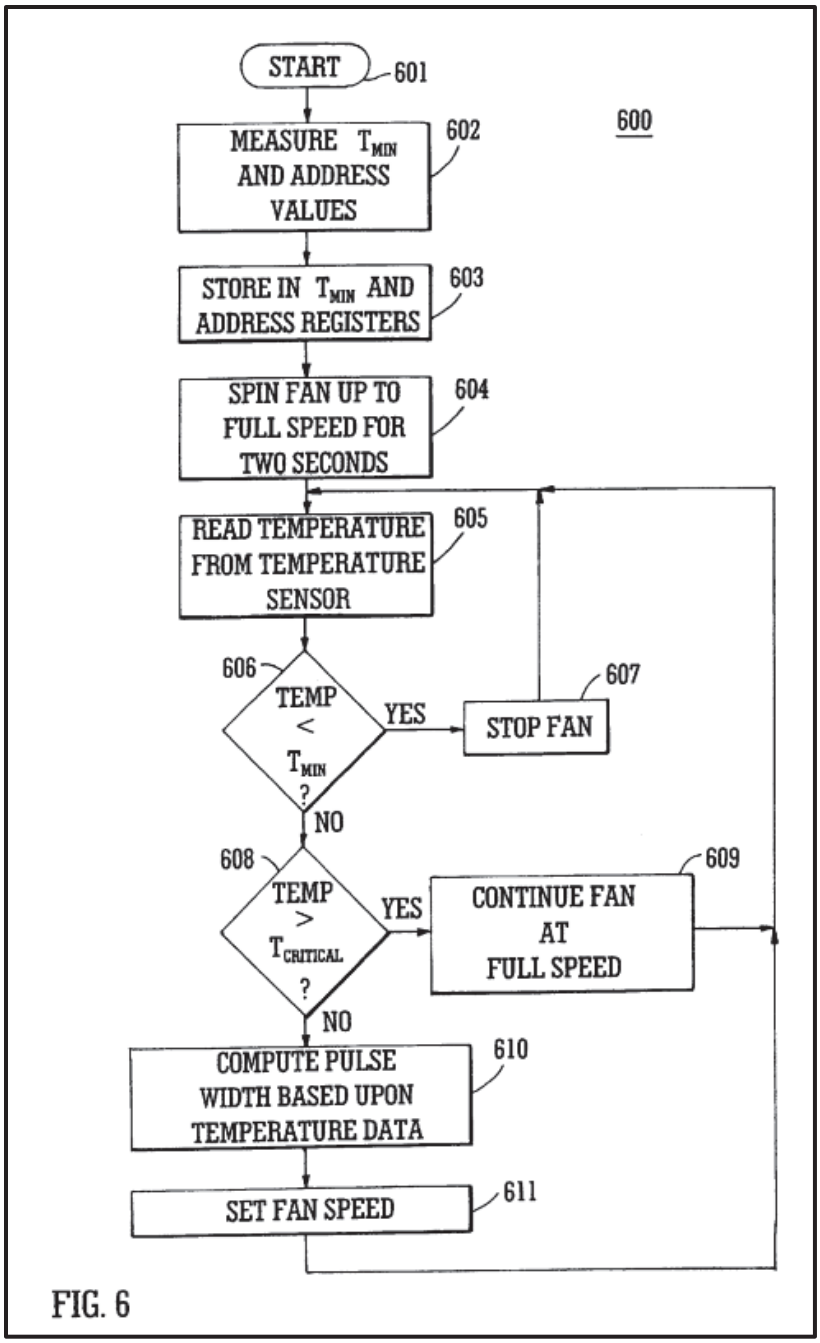

FIG. 6

Ex. 1009, FIG. 6.

123. Due to concerns with inefficiencies with these prior solutions, Bishop identifies "a need for an air delivery system that can automatically alter air volume to module cabinets based on cabinet and/or component temperature. Moreover, there is a need for a system that automatically tracks critical environment

Docusign Envelope ID: F2AC5118-C68A-4644-ABD5-897CFD6B4554

temperatures throughout a data center environment and provides information regarding the same." Ex. 1008, [0032].

124. Bishop teaches cooling systems and methods for a critical environment room **10** with "a plurality of electronic module cabinet assemblies **14a-n** [] arranged in a spaced format," as shown in Figure 1 of Bishop, provided below. Ex. 1008, [0062]. "An air source **18** is located inside [the critical] environment **10** and provides cooling air." Ex. 1008, [0062]. Additionally, "a supervising controller **16** is located outside environment **10** but links to various components within environment **10** via one or more data buses that enable supervising controller **16** to monitor and control environment characteristics." Ex. 1008, [0062].

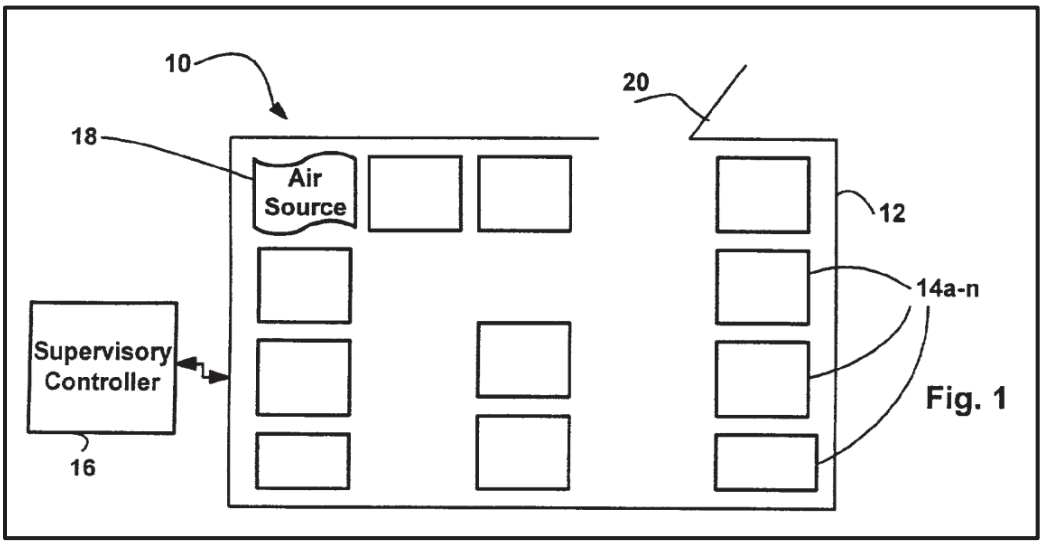

Ex. 1008, FIG. 1.

125. Bishop provides additional details on one of the cabinet assemblies **14a** in Figure 5, an annotated version of which is provided below. Ex. 1008, [0064]. Bishop discloses that the cabinet assembly **14a** includes a housing **106** (annotated

Docusign Envelope ID: F2AC5118-C68A-4644-ABD5-897CFD6B4554

in purple), a shelving unit **107** (annotated in green) and five electronic modules **26**, **28**, **30**, **32** and **34** (annotated in pink). Ex. 1008, [0067]. Each cabinet **14a** also has an internal temperature sensor **73** and an external temperature sensor **77** (shown in Figure 5). Ex. 1008, [0067]; *see also* Ex. 1008, FIG. 2.

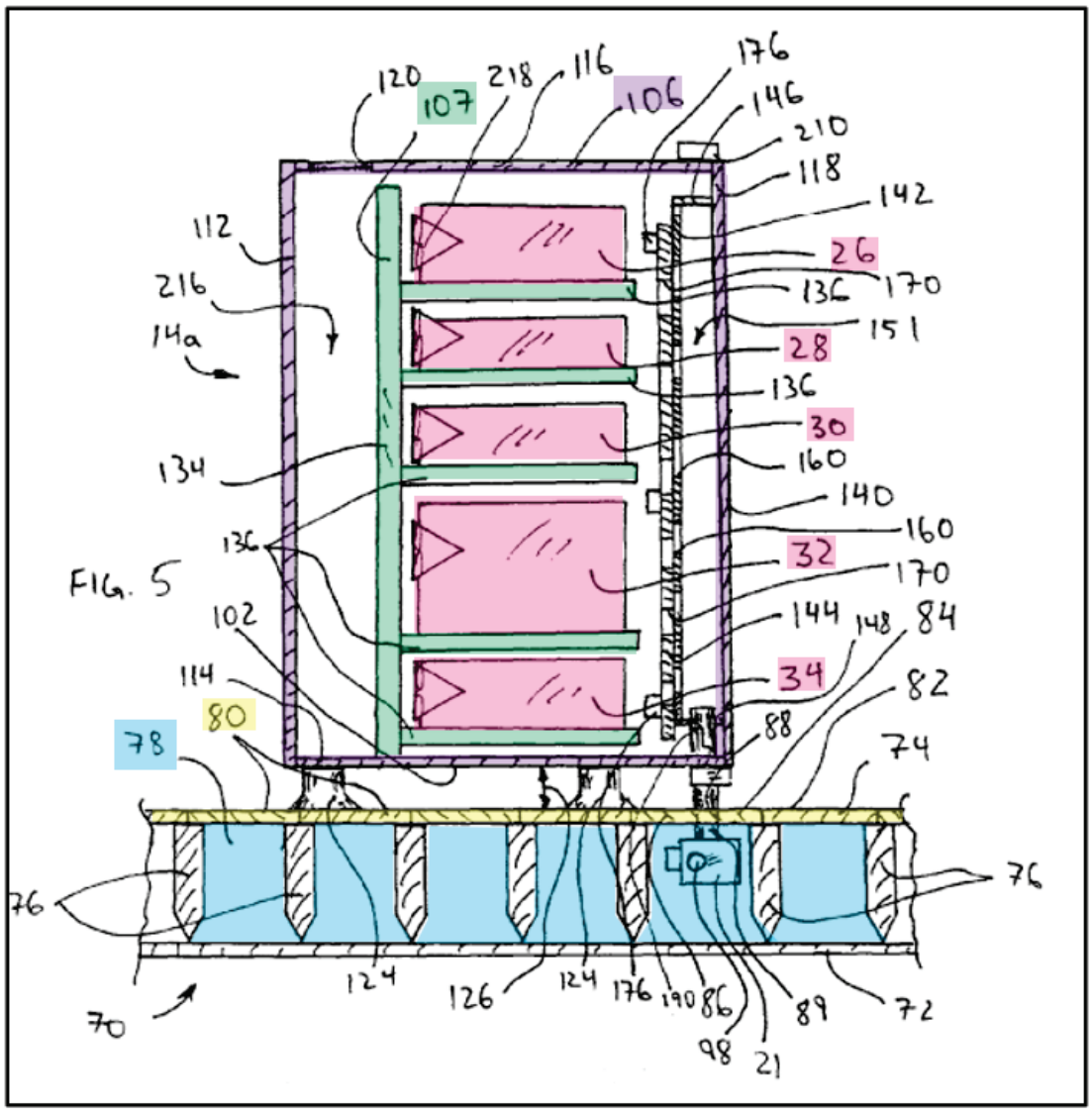

Ex. 1008, FIG. 5 (annotated).

126. Still referring to Figure 5 of Bishop, the cooling air source **18** provides cool air within space **78** (annotated in blue) below the support tiles **80** annotated in

Docusign Envelope ID: F2AC5118-C68A-4644-ABD5-897CFD6B4554

yellow) that serve as a floor on which the cabinet assembly **14a** sits. Ex. 1008, [0063]. "Some of the tiles are . . . special control tiles (e.g., **84**)" that "facilitate delivery of cool air from space **78** directly into cabinet assemblies (e.g., **14a**) thereabove." Ex. 1008, [0064]. The "control tile **84** also includes a cooling controller unit **21**" that "includes a damper and a processor (not separately illustrated)." Ex. 1008, [0065].

127. Bishop further discloses that the cabinet assembly **14a** includes a wall member **142** with multiple openings **160**. Ex. 1008, [0072]. The cabinet assembly **14a** also has a baffle member **144** that "has a size, shape and construction that is similar to wall member **142**." Ex. 1008, [0073]. For example, the baffle member **144** has openings **170** that "have shapes similar to openings **160**." Ex. 1008, [0073].

128. As shown in Figures 7 and 8 of Bishop, provided below, the baffle **144** can be aligned or misaligned with the wall member **142** to vary the effective size of the openings through which "air within space **151** is forced through" to deliver air "directly to the front faces of electronic modules **26**, **28**, **30**, **32** and **34**, respectively." Ex. 1008, [0080]. For example, "[i]n FIG. 7, baffle **144** is positioned in a relatively low orientation with respect to wall member **142** and therefore openings **170** are misaligned with openings **160** and the effective openings **178** are relatively small. In FIG. 8, baffle **144** is positioned relative to wall member **142**

Docusign Envelope ID: F2AC5118-C68A-4644-ABD5-897CFD6B4554

such that openings **170** are aligned with openings **160** and the effective openings **178** are maximized." Ex. 1008, [0074].

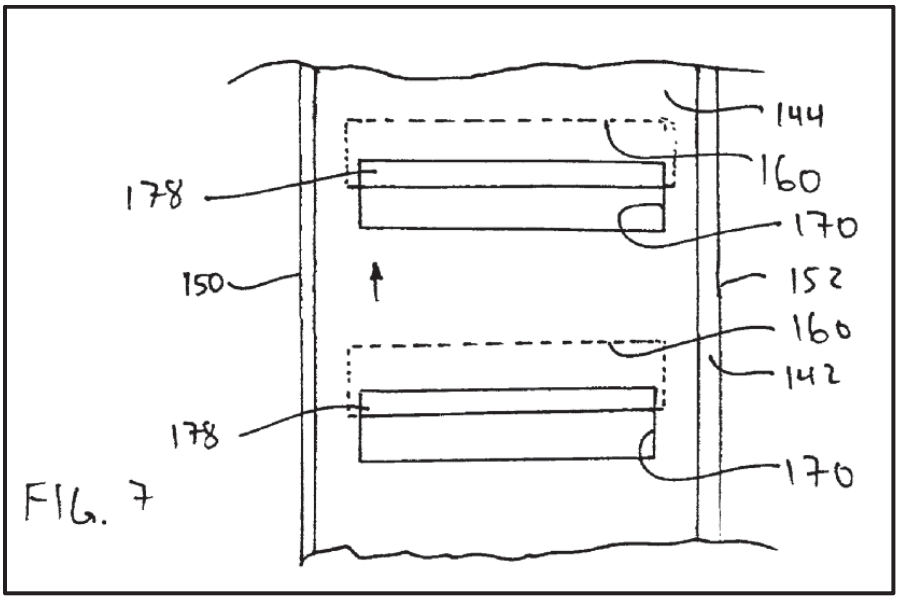

Ex. 1008, FIG. 7.

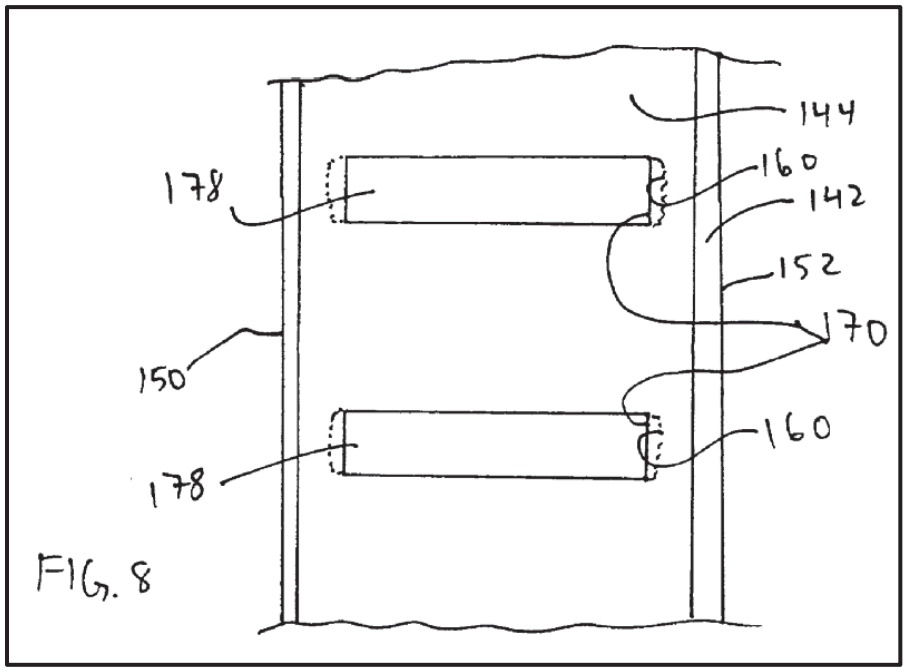

Ex. 1008, FIG. 8.

Vertiv Ex. 1002
Vertiv v. Valtrus

Docusign Envelope ID: F2AC5118-C68A-4644-ABD5-897CFD6B4554

129. Bishop explains that varying the effective size of the openings through the positioning of the baffle **144** is useful to "deliver[] cool air from a cool air source directly to the position relative to heat generating electronic modules that is most efficient for use." Ex. 1008, [0080].

130. As another example of how Bishop varies the delivery of cool air to heat generating electronic modules in a cabinet assembly (e.g., **14a**), Bishop discloses a method that utilizes the cooling controller **21**, which is best explained with reference to Figures 2 and 11 of Bishop.

131. Figure 2, reproduced below, provides a schematic diagram of many of the components of Figure 1—including the cooling controller **21** and a cabinet assembly (e.g., **14a**). Ex. 1008, [0046]. As shown in Figure 2, "the temperature sensors in [the electronic]modules **26**, **28**, **30**, **32** and **34** are identified by numerals **36**, **38**, **40**, **42** and **44**, respectively." Ex. 1008, [0081]. Since each module has its own temperature sensor, "each module is capable of determining its own internal temperature and communicating that temperature to supervising controller **16**" so that the "supervisory controller **16** may control controller **21** based on the temperature." Ex. 1008, [0081]–[0082].

Docusign Envelope ID: F2AC5118-C68A-4644-ABD5-897CFD6B4554

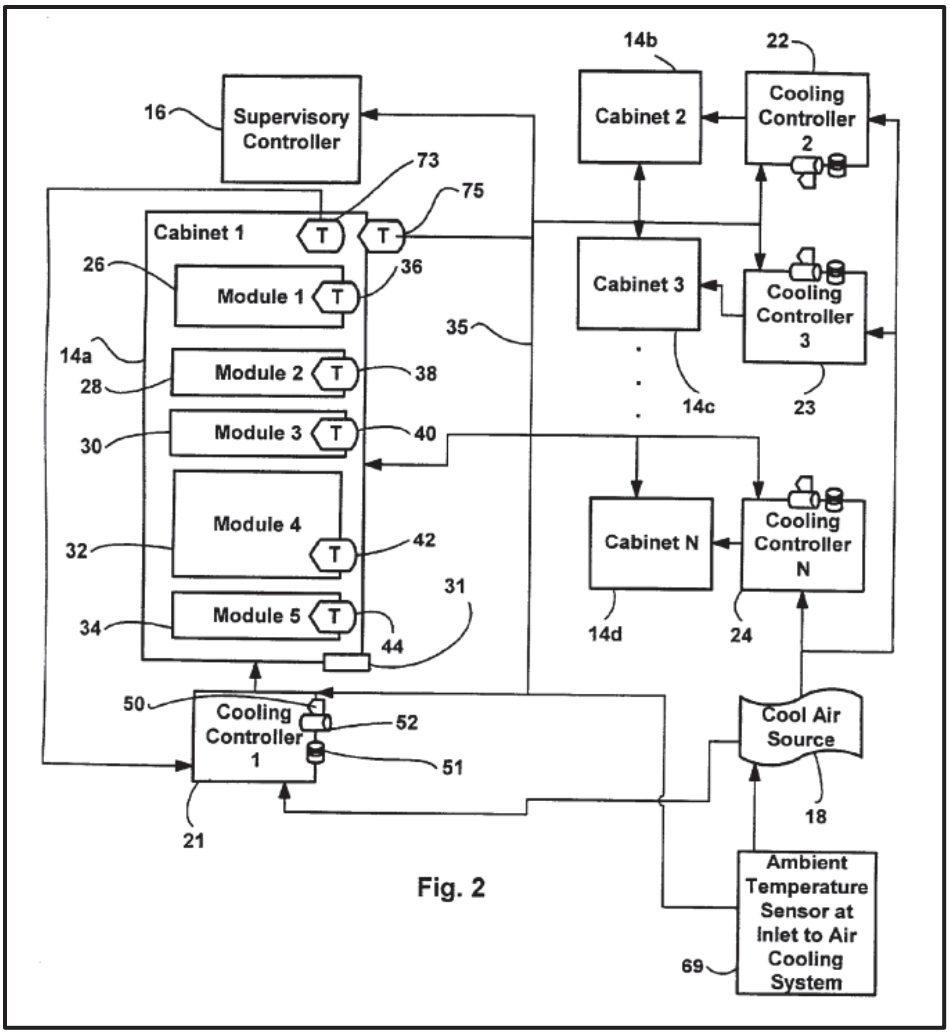

Ex. 1008, FIG. 2.

132. An exemplary method **298** of how the supervisory controller **16** may control cooling controller **21** is illustrated in Figure 11, provided below. Bishop further teaches that this "method **298** could also be performed via controller **21**." Ex. 1008, [0082].

Docusign Envelope ID: F2AC5118-C68A-4644-ABD5-897CFD6B4554

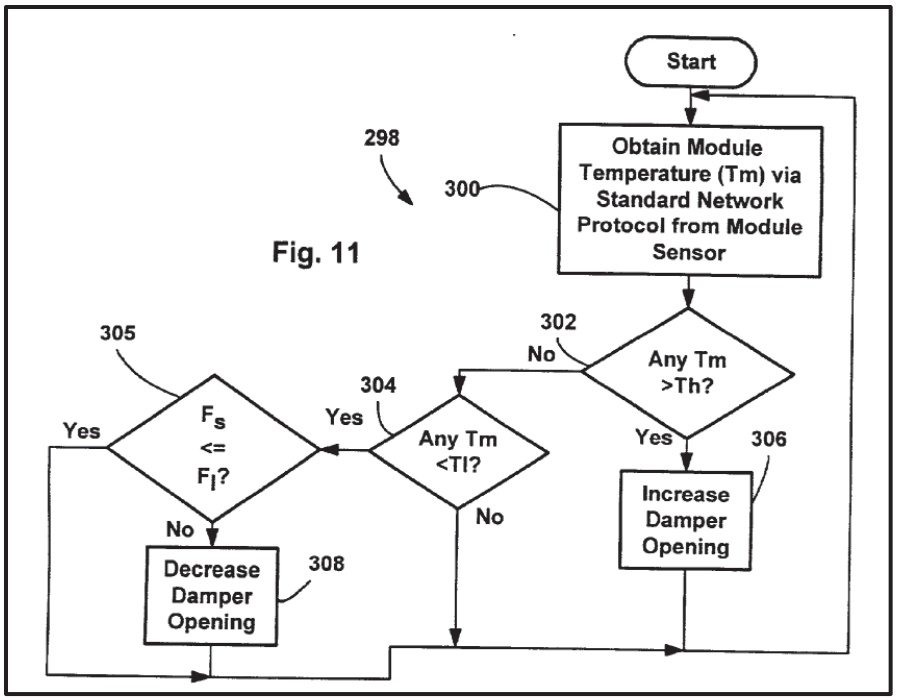

Ex. 1008, FIG. 11.

133. As shown in Figure 11, at block **300**, either the supervisory controller **16** or the cooling controller **21** "receives temperature readings from each module." Ex. 1008, [0082]. Then, at block **302**, "supervising controller **16** compares each module temperature T_m to a threshold temperature that is at the high end of an acceptable temperature range" (T_h). Ex. 1008, [0083]. "[W]here any module temperature [does not] exceed[] the threshold temperature T_h, control passes to block **304** where supervising controller **16** determines if any temperature is less than a low threshold temperature T_l." Ex. 1008, [0083].

134. "[W]here any module temperature is below the low threshold[,] control passes to block **305** where controller **16** compares [flow rates]." Ex. 1008, [0084]. If "the sensed rate F_s is greater than the minimum flow rate F_l, control passes

Docusign Envelope ID: F2AC5118-C68A-4644-ABD5-897CFD6B4554

to block **308** where supervising controller **16** decreases the damper opening to reduce cooling air flow to the corresponding cabinet." Ex. 1008, [0084]. And as discussed above, the damper is part of the cooling controller **21**. Ex. 1008, [0065].

135. Bishop further teaches that at "block **302**, where any module temperature is above the high threshold temperature[,] control passes to block **306** where supervising controller **16** [] increases the damper opening to increase cooling air flow to the corresponding cabinet." Ex. 1008, [0085].

136. Bishop also explains that temperature sensor **73** inside each cabinet **14a** is also linked to controller **21** "to provide redundancy for sensors **36**, **38**, etc., or may supplant the module sensors **36**, **38**, etc. so that controller **21** operates independent of controller **16**." Ex. 1008, [0105]. Sensor 75 on the outside of each cabinet is also linked to controller 16 to provide ambient temperature readings at the cabinet location. Ex. 1008, [0106].

137. Additional details about the disclosures of Bishop are set forth in Section IX below.

D. Kochavi

138. U.S. Patent No. 5,979,167 ("Kochavi") issued on November 9, 1999, and the underlying Patent Application (No. 08/783,761) was filed on January 15, 1997. Ex. 1011, cover. Kochavi is directed to an air conditioning system that is

Docusign Envelope ID: F2AC5118-C68A-4644-ABD5-897CFD6B4554

capable of heating and cooling multiple rooms simultaneously, where the rooms have different heating and cooling requirements.

139. Kochavi explains that "[v]arious central air conditioning systems are known in the art which provide conditioned air to a plurality of rooms wherein the temperature of each of the rooms may be controlled independently." Ex. 1011, 1:10–13. Kochavi mentions one commercially available system that "divides the rooms to be air conditioned into a number of zones and controls the amount of conditioned air entering each zone by means of controllable dampers operating in response to the temperature in each of the zones." Ex. 1011, 1:14–21.

140. Another prior art central air conditioning system described by Kochavi is the prior art device "described in U.S. Pat. No. 4,635,4[4]5 to Otsuka et al. The Otsuka prior art device measures the heat load in each room by means of temperature sensors and controls the quantity of air to be directed to each room by means of variable dampers. The pressure in the main air duct is also measured and the speed of the blower adjusted accordingly. Under part load conditions, the speed of the compressor is reduced so as to conserve energy." Ex. 1011, 1:36–43.

141. Kochavi explains that these prior art solutions often have a compressor operating "at reduced speeds [that] results in inefficient operation of the compressor as well as requiring an expensive speed controller for controlling the speed of the electric motor which drives the compressor." Ex. 1011, 1:44–51. In Kochavi's

Docusign Envelope ID: F2AC5118-C68A-4644-ABD5-897CFD6B4554

improved approach, shown in Figure 1, an annotated version of which is provided below, the air conditioning system **10** includes a first compressor **12**, a second compressor **22**, a blower **40**, a main duct **44**, and a control system **100**. Ex. 1011, 3:61–4:67. The blower **40** directs a flow of air through heat exchangers **16**, **26** to condition the air and then the conditioned air **43** flows through the main duct **44** and "through a plurality of branch ducts **46** to a plurality of rooms **50**, **52** and **54** via variable dampers **56**, **58** and **60** [(annotated in pink)] respectively." Ex. 1011, 4:38–47.

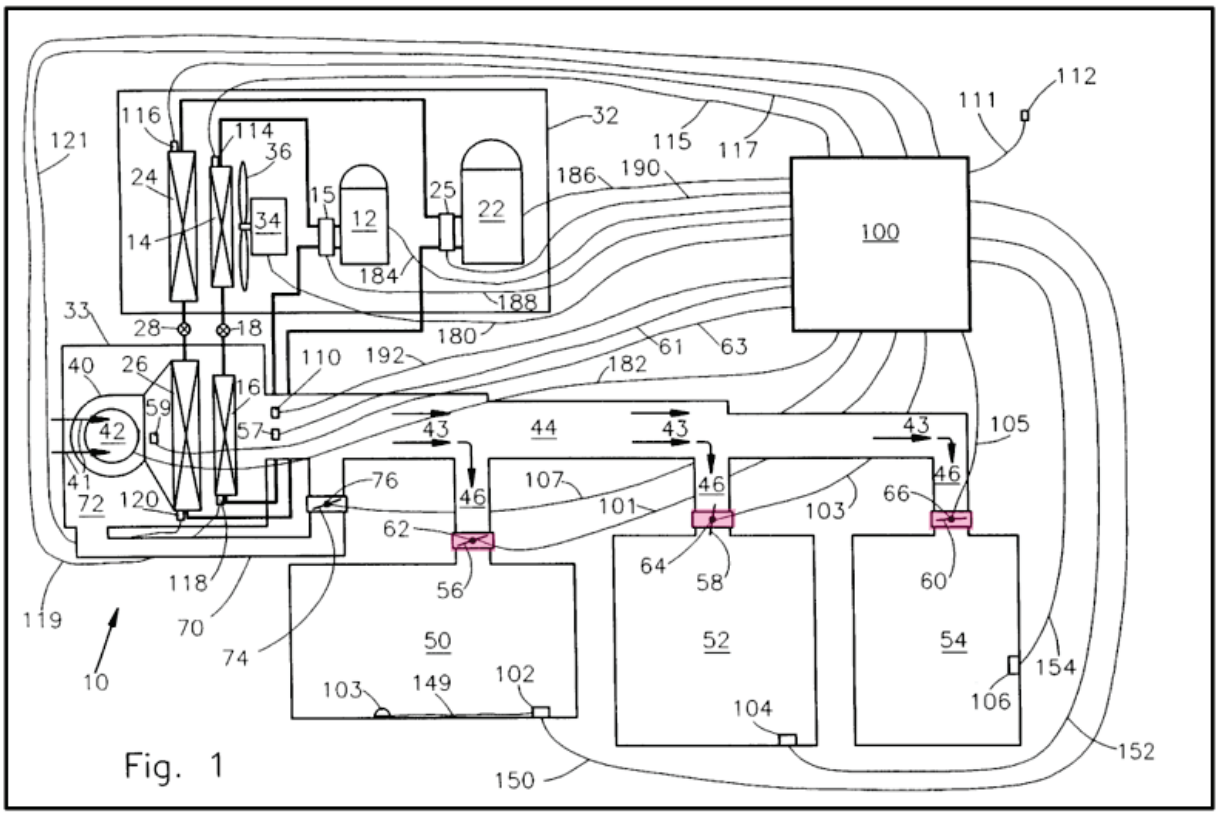

Ex. 1011, FIG. 1 (annotated).

Vertiv Ex. 1002
Vertiv v. Valtrus

Docusign Envelope ID: F2AC5118-C68A-4644-ABD5-897CFD6B4554

142. "The air conditioning system **10** also comprises an air flow pressure sensor **110** which may be located at the entrance to the main duct **44**. . . . The air flow sensor **110** is operative to send a duct pressure signal to the control system **100** which is substantially proportional to the air pressure at the entrance to the main duct **44**." Ex. 1011, 4:58–67.

143. The air conditioning system **10** of Kochavi also has a "bypass duct **70** . . . to provide a flow path for the conditioned air from the main duct **44** and return it to an entrance region **72** located in proximity to the upstream end of the blower **40**." Ex. 1011, 5:1–5. A bypass damper **74** in the bypass duct **70** "is operative, in response to signals from the control system **100**, to return some or all of the conditioned air to the entrance region **72** if the pressure sensed by air flow pressure sensor **110** exceeds a value which may be in the region of 16 to 19 psi and is preferably about 17 psi." Ex. 1011, 5:5–12.

144. Kochavi also discloses that the control system **100** communicates with the compressors **12** and **22**, the blower motor **42** (of the blower **40**), the damper motors **62**, **64**, and **66** (of the dampers **56**, **58**, and **60**), the bypass damper motor **76** (of the bypass damper **74**), room temperature controllers **102**, **104** and **106** (in each of the rooms **50**, **52** and **54**), and the air flow pressure sensor **110**. Ex. 1011, 5:16–57.

Docusign Envelope ID: F2AC5118-C68A-4644-ABD5-897CFD6B4554

145. Kochavi further discloses that the compressors **12** and **22** are able to allow operation of "the air conditioning system **10** for 'summer operation' and 'winter operation' as is known in the art." Ex. 1011, 3:63–67. In other words, a POSITA would understand that the "air conditioning system **10** [] provid[es] cooling air during 'summer operation' and . . . provide[s] heated air during 'winter operation.'" Ex. 1011, 6:53–59.

146. There is a room temperature controller **102**, **104**, **106** for each room. Ex. 1011, FIGs. 1 and 2, 6:60–65. Each room temperature controller **102** includes a first microprocessor **130** and a room temperature sensor **132** which are communicatively connected. Ex. 1011, 6:65–7:24. The first microprocessor **130** sends sensed temperature values and a desired room temperature to the control system **100**. Ex. 1011, 7:50–62, 8:24–27.

147. Figure 4, reproduced below, shows a flow chart of several procedures that the main control program can execute to control the compressors, dampers, bypass damper, blowers, and external blowers. Ex. 1011, 15:34–37.

Docusign Envelope ID: F2AC5118-C68A-4644-ABD5-897CFD6B4554

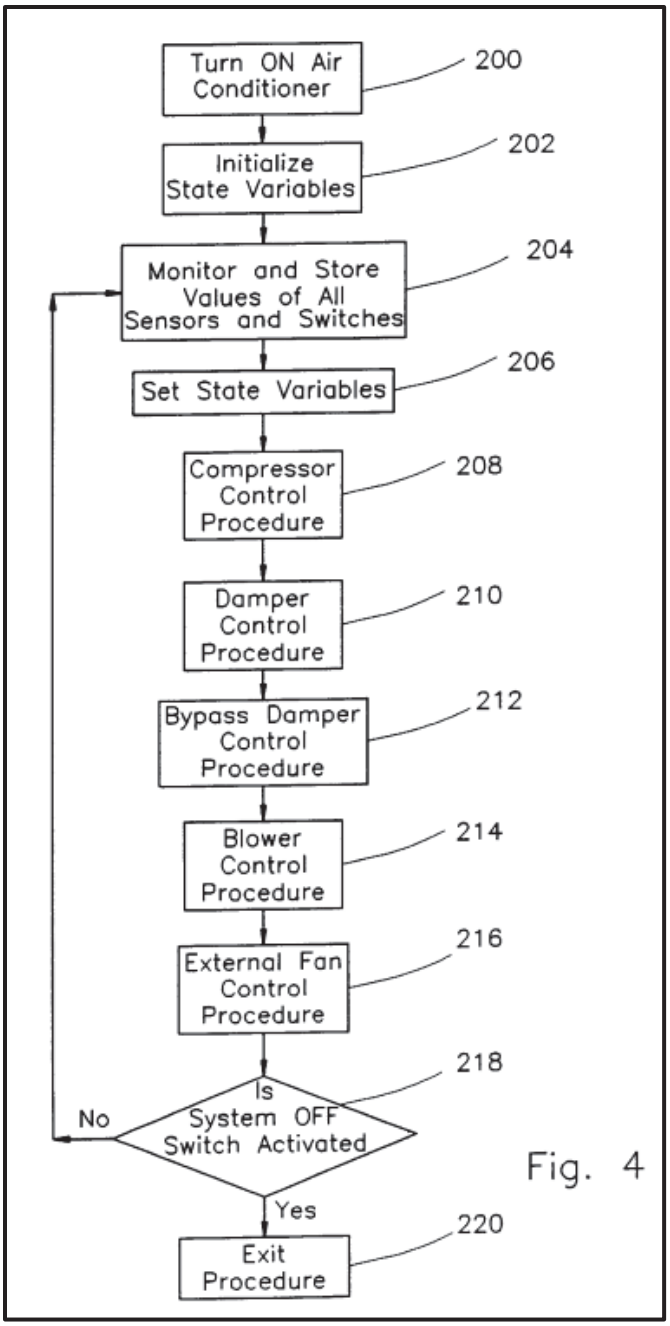

Ex. 1011, FIG. 4.

148. The control system **100** can control the fraction opening of dampers **56**, **58** and **60**. Ex. 1011, 13:21–27.The "[o]peration of the control system **100** . . . for each of the rooms is [] described in terms of heating for 'winter operation'. It is apparent to one normally skilled in the art that the teachings of the present invention

Vertiv Ex. 1002
Vertiv v. Valtrus

Docusign Envelope ID: F2AC5118-C68A-4644-ABD5-897CFD6B4554

are equally applicable to cooling in 'summer operation'." Ex. 1011, 13:28–33. In winter operation, for example, if the measured temperate of room **50** is below a desire temperature range, the controller will be set to fully open to allow heated air into the room. Ex. 1011, FIG. 8, 13:44–53. When the temperature reaches the upper limit of the range, the controller **100** is operative to close the damper to prevent additional air from entering the room **50**. Ex. 1011, FIG. 8, 13:54–14:8.

149. A Compressor Control Procedure is operative to turn the first compressor **12** ON if the total thermal load of all the rooms is low, to turn the second compressor **22** ON if the total thermal load is at an intermediate value, and to turn both compressors ON if the total thermal load of all the rooms is at a high value. Ex. 1011, 19:32–40.

150. Depending on the pressure in the main duct **44**, the Bypass Damper Procedure is operative to increase or decrease the fraction opening of the bypass damper **74**, thereby maintaining a substantially constant pressure in the main duct **44**." Ex. 1011, 15:61–65.

151. In the Blower Control Procedure, "the total air flow requirement for all of the rooms, RoomVolume, is calculated by summing up the individual air flow requirement of all of the rooms." Ex. 1011, 20:7–10. "[T]he Blow[er] Control Procedure . . . is operative to adjust the speed of the blower motor 42" in response to the total air flow requirement of all of the rooms. Ex. 1011, 20:15–29.

Docusign Envelope ID: F2AC5118-C68A-4644-ABD5-897CFD6B4554

152. Additional details about the disclosures of Kochavi are set forth in Section IX below.

E. Feeney

153. U.S. Patent No. 5,467,609 to Feeney (Ex. 1013, "Feeney") issued on November 21, 1995, from an application filed on March 3, 1994. Feeney discloses a raised floor system for supporting rack mounted computer equipment in facilities such as data centers. Ex. 1013, 1:17–36, 2:27–31. The disclosed system is made up of connectable floor modules, including modules providing operational support for use by the computer components.

154. An embodiment of Feeney's disclosed raised floor system is illustrated in Figure 1, reproduced below.

Vertiv Ex. 1002
Vertiv v. Valtrus

Docusign Envelope ID: F2AC5118-C68A-4644-ABD5-897CFD6B4554

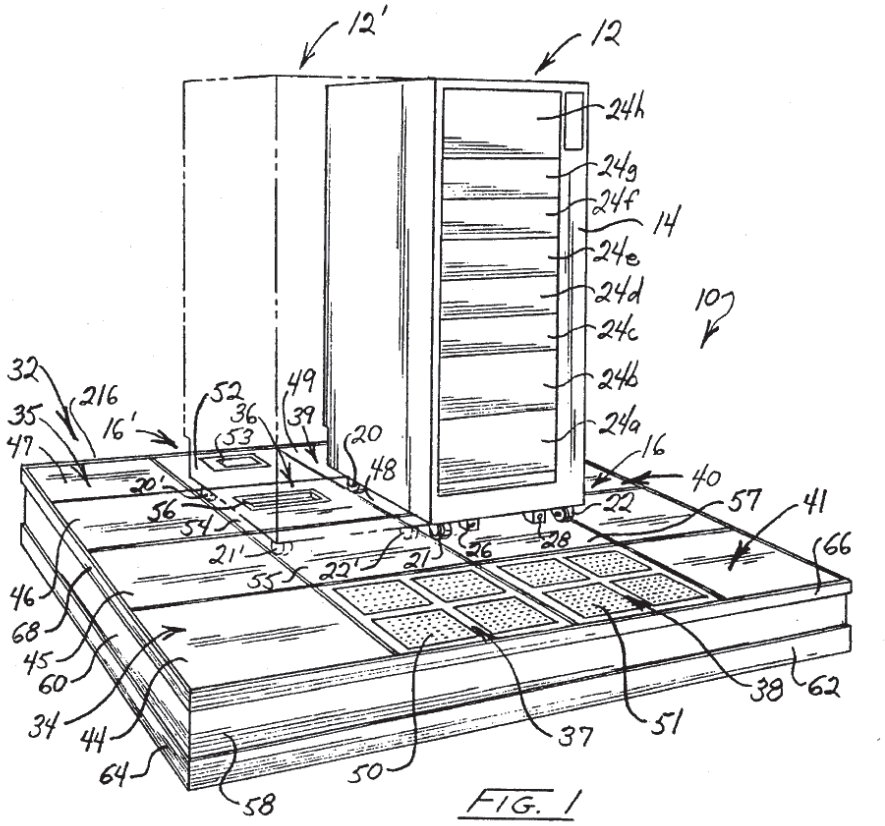

FIG. 1

Ex. 1013, FIG. 1. The floor system 10 is illustrated as supporting computer rack 12 and adjacently positioned computer rack 12' shown in phantom. Ex. 1013, 5:35–41.

155. The computer racks 12 and 12' are supported on an elevated floor 32 which is formed of eight individual floor modules labeled 34 to 41 which each support two rigid floor tiles. Ex. 1013, 5:53–65. Certain modules, for example modules 37 and 38, contain chilled water air conditioning coils and floor tiles 50 and 51 contain air entry holes for supplying air to the cooling coils. Ex. 1013, 5:56–60; 6:2–7. Floor module 38 also houses an air blower fan 148. Ex. 1013, 8:1–3. Uninterruptable power supply (UPS) devices are located within modules 36 and 39.

Docusign Envelope ID: F2AC5118-C68A-4644-ABD5-897CFD6B4554

Ex. 1009, 5:56–62, 6:7–16. The adjacent tile 54 within floor module 52 contains an air outlet 56 through which cooled air may flow into the base region of computer component 12'. Ex. 1013, 6:16–19.

156. Figure 2 shows an individual floor module.

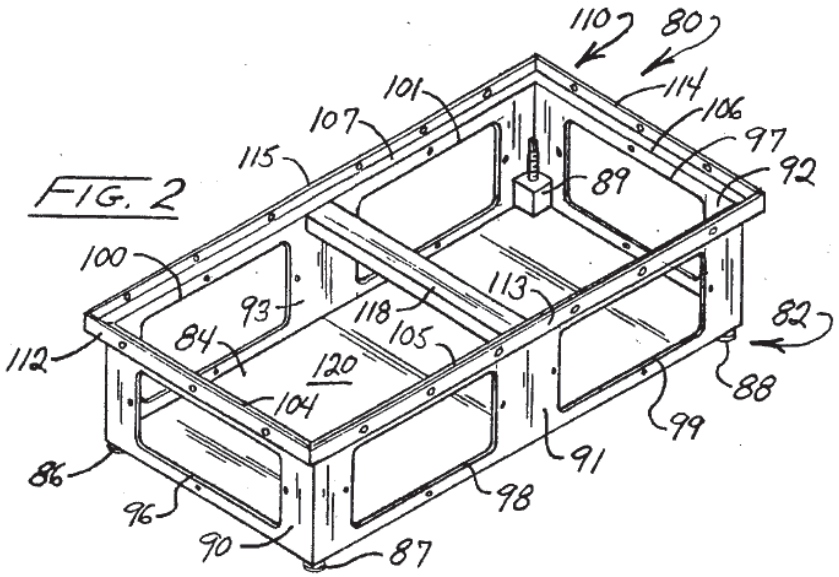

Ex. 1013, FIG. 2.

157. The illustrated module 82 has a rectangular frame 80 with bottom portion 84 and side panels 90–93. The shorter side panels 90 and 92 each include a single opening and the long panels 91 and 93 include two spaced-apart openings 98 and 99. Ex. 1013, 6:58–7:9. Feeney teaches that the user can define airflow paths in the plenum space under the raised floor by selective closure of these air transfer openings. Ex. 1013, 10:20–22. For example, with reference to Figure 1 above, an air blower fan 148 in floor module 38 forces cooling air through the system. By positioning blocking panels and gasketing to block certain of the air transfer

Docusign Envelope ID: F2AC5118-C68A-4644-ABD5-897CFD6B4554

openings, an air flow path is established from the openings in floor tile 51, then through chilled water-cooling coil 124 to the input of the blower, and then from the blower output to the adjacent module 36 and exiting through an opening 56 in floor tile 54. Ex. 1013, 8:1–17.

158. Feeney emphasizes the advantageous capability for reconfiguring the floor modules "depending upon changing processing requirements and/or changes in the geometry of the floor region available for the date center function." Ex. 1013, 11:48–52. Feeney teaches numerous exemplary arrangements of blocking panels to define alternative airflow paths to supply cooling air to the data center zones in a targeted manner. Figure 9, for example, shows an overhead view of one configuration in which module openings are selectively closed or left open to direct cooling air from air circulation blowers within modules 397 and 398 to computer components 392 and 394 and to UPS devices 422 and 424. Ex. 1013, 13:3–43; FIG. 9. In this arrangement, the panel openings are blocked at 410, 412 and 432. Ex. 1013, 13:22–24, 13:35–37.

Vertiv Ex. 1002
Vertiv v. Valtrus

Docusign Envelope ID: F2AC5118-C68A-4644-ABD5-897CFD6B4554

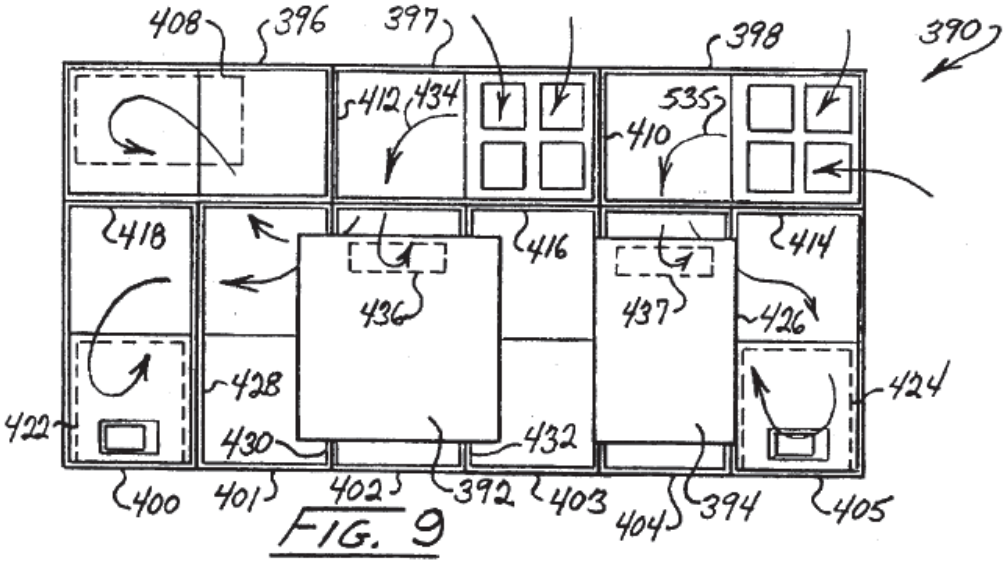

Ex. 1013, FIG. 9.

159. Another example illustrating the flexibility of the system to direct multiple supplies of cooling air to the heat-generating equipment in multiple zones of a data center appears in Figure 10.

Vertiv Ex. 1002
Vertiv v. Valtrus

Docusign Envelope ID: F2AC5118-C68A-4644-ABD5-897CFD6B4554

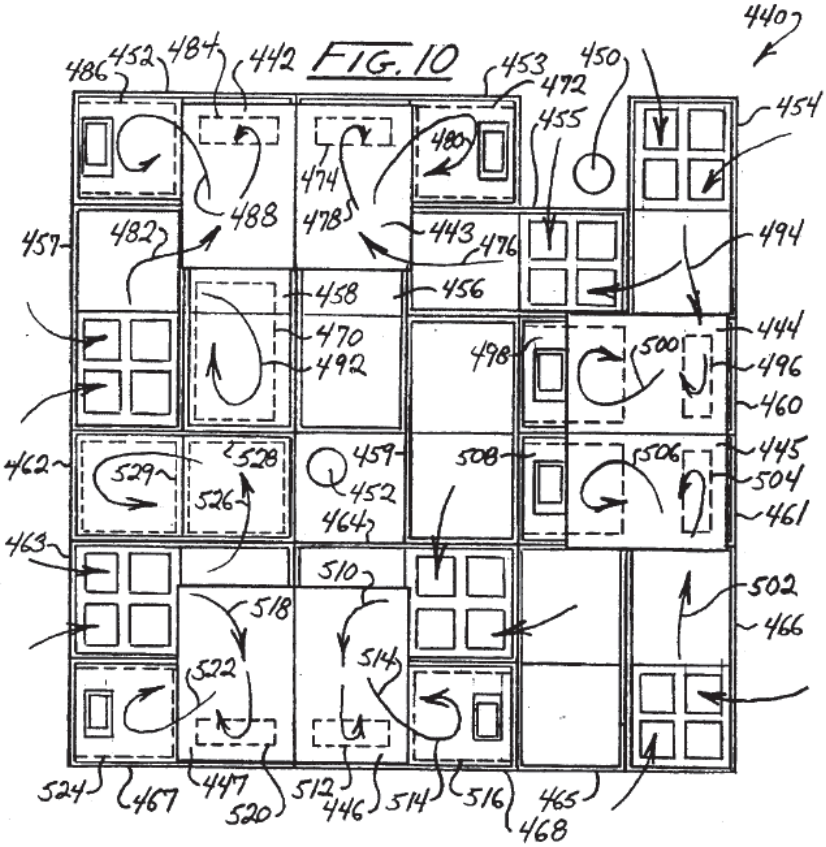

Ex. 1013, FIG. 10, 13:53–15:10.

IX. ANALYSIS OF THE PRIOR ART AND THE ’179 PATENT CLAIMS

A. GROUND 1: CLAIMS 1–15 ARE ANTICIPATED BY BASH

160. It is my opinion that, under the construction of “partition” reflected in Patent Owner’s infringement assertions, Bash discloses all of the limitations of claims 1–15 of the ’179 patent. The reasons underlying my opinion are set forth below.

1. Claim 1

161. I discuss each limitation of claim 1 in turn below, in conjunction with the relevant disclosures of each claim limitation by Bash.

Docusign Envelope ID: F2AC5118-C68A-4644-ABD5-897CFD6B4554

a. 1[pre] – "A method of cooling a plurality of racks in a data center, said method comprising:"

162. The preamble of claim 1 recites, "*[a] method of cooling a plurality of racks in a data center, said method comprising*."

163. I have been informed that claim preambles are generally not limiting. In any case, even if the preamble here were a limitation, I believe that Bash discloses this recitation.

164. For example, Bash discloses "[a] method of cooling a plurality of racks in a data center, said method comprising." Ex. 1005, Claim 12.

165. As another example, Bash discloses "a cooling system for cooling racks in a data center" and methods of using the same. Ex. 1005, Abstract.

166. Thus, Bash discloses limitation 1[pre].

b. 1[a] – "activating a cooling device and opening a controllable partition configured to vary a supply of cooling fluid within a zone of said data center, said zone including at least one associated rack of said plurality of racks;"

167. Claim 1 further recites "*activating a cooling device and opening a controllable partition configured to vary a supply of cooling fluid within a zone of said data center, said zone including at least one associated rack of said plurality of racks.*" In my opinion, under Patent Owner's construction of "partition" Bash discloses this limitation.

Docusign Envelope ID: F2AC5118-C68A-4644-ABD5-897CFD6B4554

168. Bash discloses a data center **10** containing a cooling system **12**, a zone above a raised floor **14** with a plurality of racks **18a–18d** that house a plurality of electronic components, and a space **16** (annotated in blue, below) beneath a raised floor **14** that may function as a plenum to deliver cooling fluid (*e.g.*, air) from the cooling system **12** to the plurality of racks **18a–18d**. Ex. 1005, [0012]; Figure 1 (reproduced with annotations below). The cooling system **12** generally includes a "cooling device having a fan" **24** (annotated in green) for circulating cooling fluid in the data center **10**. Ex. 1005, [0005].

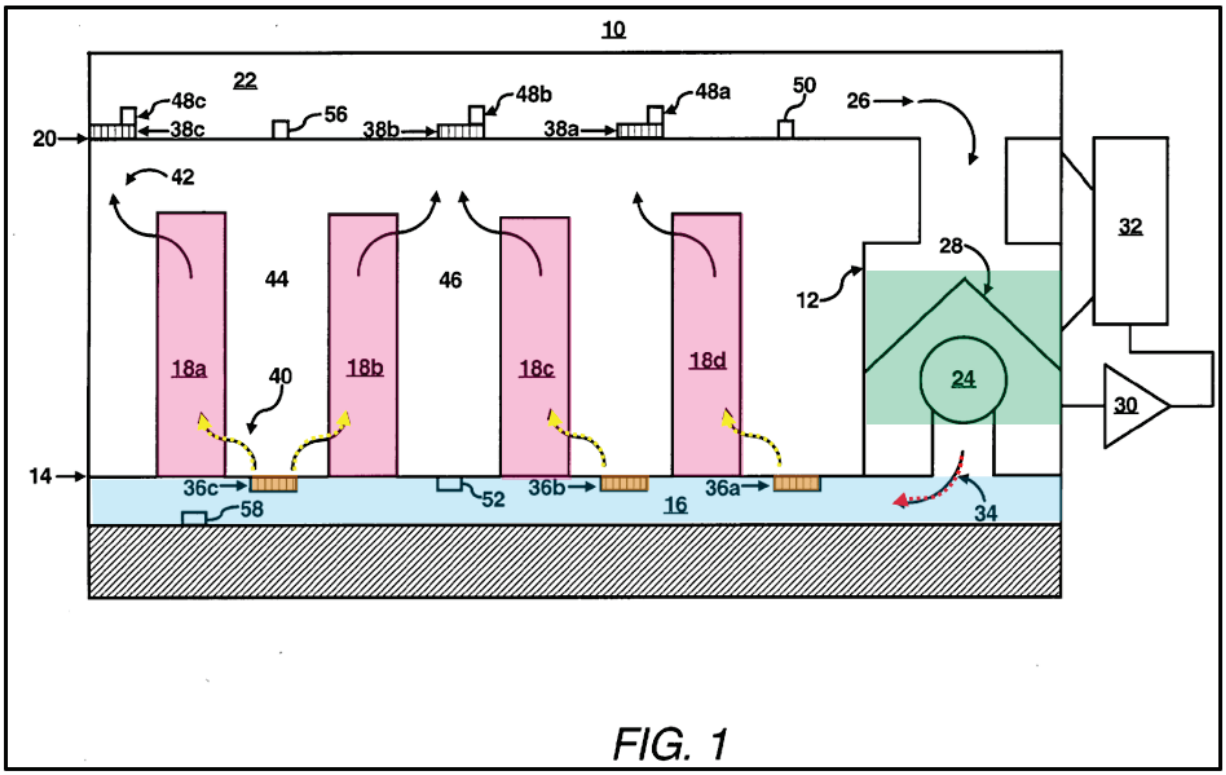

Ex. 1005, FIG. 1 (annotated).

Docusign Envelope ID: F2AC5118-C68A-4644-ABD5-897CFD6B4554

169. Bash further discloses the cooling fluid, i.e. cooling air, being delivered to the plurality of racks **18a–18d** (annotated in pink) by "flow[ing] out of the raised floor **14** through a plurality of dynamically controllable vents **36a–36c** [(annotated in orange)] that generally operate to control the velocity and the volume flow rate of the cooling fluid therethrough" and into the zone above the raised floor **14** where the plurality of racks **18a–18d** are located. Ex. 1005, [0018].

170. Bash also teaches a method of operating the cooling system **202** in the flow diagram **300** of Figure 3A of Bash, reproduced below. In the first step **302** of this method, "the cooling system **202** is activated and the vents **36a-36c** . . . are opened." Ex. 1005, [0048].

Vertiv Ex. 1002
Vertiv v. Valtrus

Docusign Envelope ID: F2AC5118-C68A-4644-ABD5-897CFD6B4554

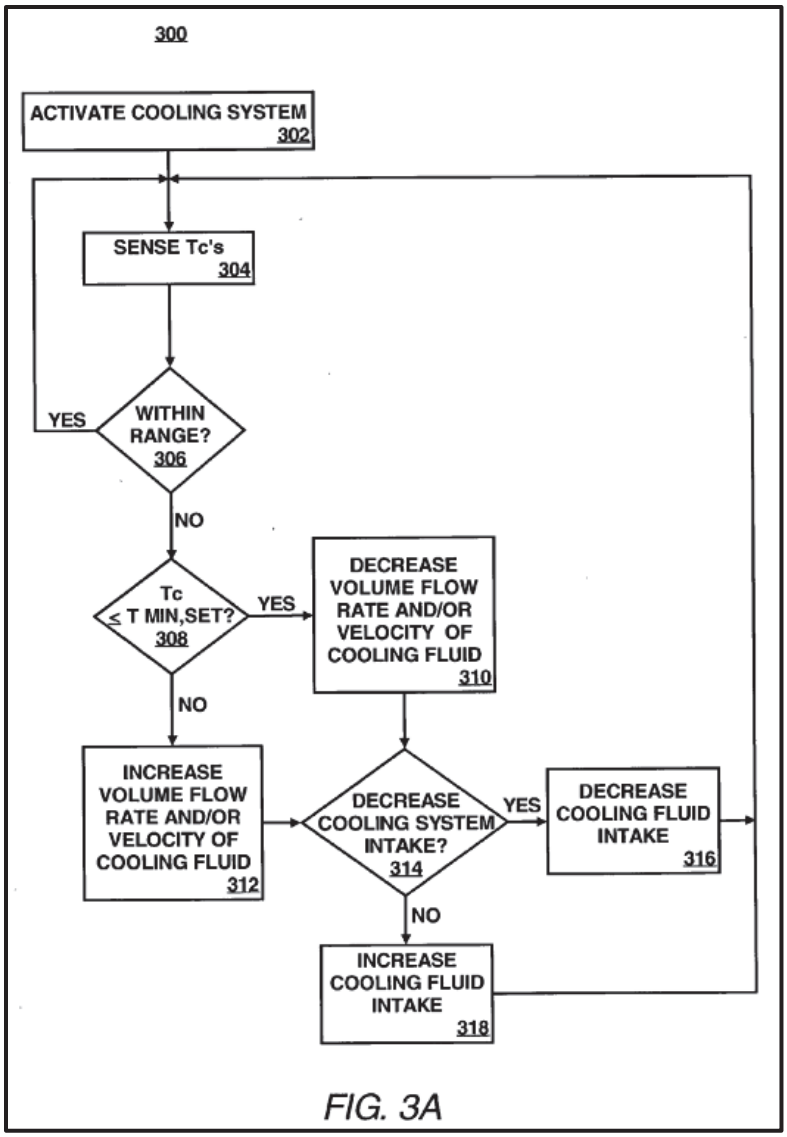

FIG. 3A

Ex. 1005, FIG. 3A.

171. Since the cooling system of Bash includes a cooling device, a POSITA would understand that activating the cooling system also activates the cooling device. Thus, Bash teaches activating a cooling device as recited in limitation 1[a].

172. In my opinion, Bash also discloses opening a controllable partition configured to vary a supply of cooling fluid within a zone of said data center as recited in limitation 1[a].

Docusign Envelope ID: F2AC5118-C68A-4644-ABD5-897CFD6B4554

173. With regard to "cooling fluid" in limitation 1[a], Bash discloses supplying cooling fluid under both Petitioner's proposed construction of "cooling fluid" and Patent Owner's expected construction, which each include cooling air. Bash teaches that "cooling fluid (e.g., *air*)" is delivered "from the cooling system **12** to a plurality of racks **18a-18d**." Ex. 1005, [0012] (emphasis added).

174. Bash also discloses the "controllable partition" recited in this claim limitation under Patent Owner's expected construction of "partition." Specifically, the controllable vents **36a-36c** of Bash disclose the controllable partition under Patent Owner's expected construction encompassing any device capable of manipulating the flow of cooling fluid.

175. Bash teaches that "cooling fluid flows out of the raised floor **14** through a plurality of dynamically *controllable* vents **36a-36c** that generally operate to control the velocity and the volume flow rate of the cooling fluid therethrough." Ex. 1005, [0018] (emphasis added). Since the vents of Bash are controllable and are capable of manipulating the flow (e.g., velocity and volume flow rate) of cooling fluid, the vents **36a-36c** of Bash disclose the controllable partition under Patent Owner's expected construction of "partition."

176. Therefore, it is my opinion that the vents **36a-36c** of Bash disclose the controllable partition recited in claim 1 under Patent Owner's expected construction of "partition."

Docusign Envelope ID: F2AC5118-C68A-4644-ABD5-897CFD6B4554

177. Bash also discloses that the vents **36a-36c** are configured to vary a supply of cooling fluid within a zone of the data center: "[t]he cooling fluid flows out of the raised floor **14** through a plurality of dynamically controllable vents **36a-36c** that generally operate to control the velocity and the volume flow rate of the cooling fluid therethrough." Ex. 1005, [0018].

178. Bash further discloses that the zone of said data center includes at least one associated rack of said plurality of racks. For example, Bash teaches that the "cool aisles **44** are those aisles that include the vents **36a-36c** and thus receive cooling fluid for delivery to the racks **18a-18d**." Ex. 1005, [0020].

179. Therefore, Bash teaches activating a cooling device and opening a controllable partition configured to vary a supply of cooling fluid within a zone of said data center, said zone including at least one associated rack of said plurality of racks, as recited in limitation 1[a].

c. 1[b] – "sensing the temperature of said at least one associated rack;"

180. Claim 1 recites "*sensing the temperature of said at least one associated rack.*" In my opinion, Bash discloses this limitation.

181. Bash teaches detecting temperatures via "a plurality of temperature sensors **48a-48c**, e.g., thermocouples, [that] may be positioned at various positions around the subsystems and/or the racks **18a-18d**." Ex. 1005, [0030]. All of the temperature sensors disclosed in Bash (*e.g.*, **48a–48c, 50, 52, 236–230**) may be

Docusign Envelope ID: F2AC5118-C68A-4644-ABD5-897CFD6B4554

employed to sense temperatures (T_C's) "in the general vicinity of the racks and/or sections of the racks." Ex. 1005, [0048]. Moreover, Bash teaches that the cooling system "may include any reasonably suitable number of temperature sensors to thus measure the temperatures of any reasonably suitable number of racks **18a-18d** or portions thereof." Ex. 1005, [0032].

182. Thus, Bash teaches sensing the temperature of said at least one associated rack, as recited in limitation 1[b].

d. 1[c] – "determining whether said sensed temperature is within a predetermined temperature range; and"

183. Claim 1 recites "*determining whether said sensed temperature is within a predetermined temperature range*." In my opinion, Bash discloses this limitation.

184. As shown in the flow diagram **300** in Figure 3A of Bash, reproduced below, "[a]t step **304**, the temperatures of the components (T_C's) are individually sensed by the temperature sensors. . . . At step **306**, it is determined whether each of the measured temperatures are individually within a predetermined range of operating temperatures, e.g., between a maximum set point temperature ($T_{max,set}$) and a minimum set point temperature ($T_{min,set}$)." Ex. 1005, [0049]; *see also* Ex. 1005, FIG. 3B.

Docusign Envelope ID: F2AC5118-C68A-4644-ABD5-897CFD6B4554

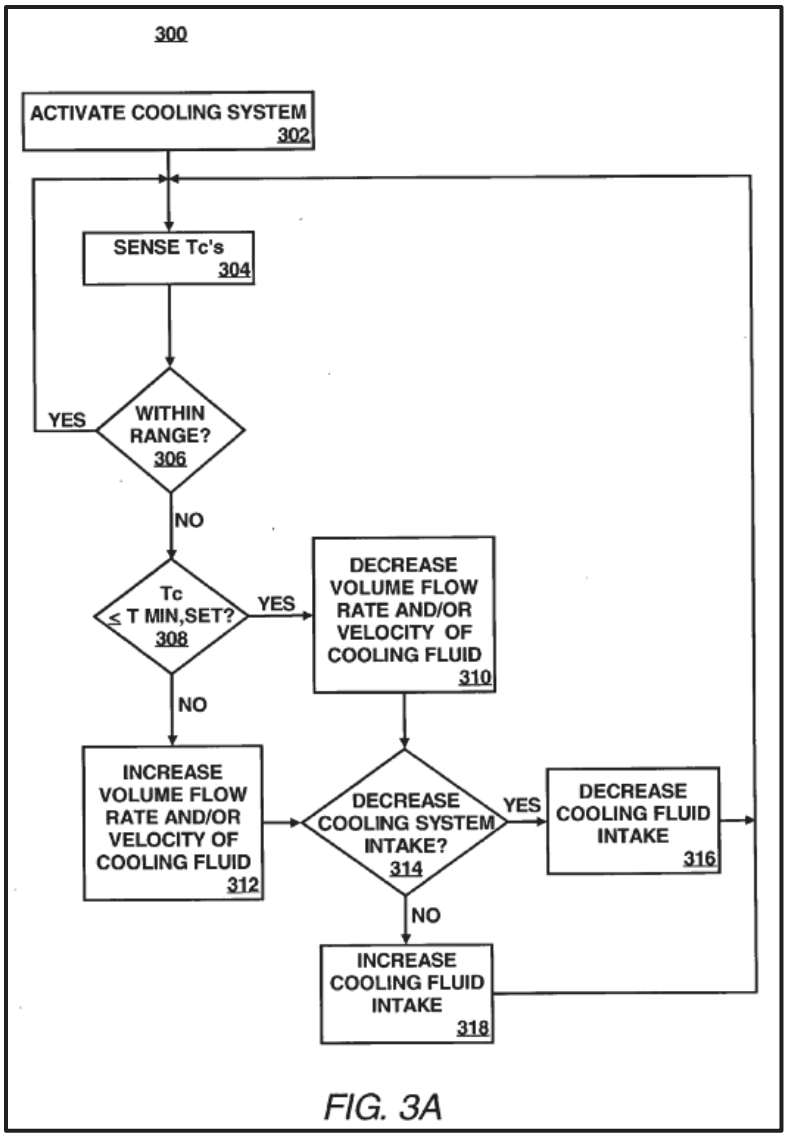

FIG. 3A

Ex. 1005, FIG. 3A.

185. Thus, Bash teaches determining whether said sensed temperature is within a predetermined temperature range, as recited in claim 1.

e. 1[d] – "manipulating said controllable partition to vary said supply of said cooling fluid to said zone in response to said sensed temperature being outside said predetermined temperature range."

186. Claim 1 recites "*manipulating said controllable partition to vary said supply of said cooling fluid to said zone in response to said sensed temperature*

Docusign Envelope ID: F2AC5118-C68A-4644-ABD5-897CFD6B4554

being outside said predetermined temperature range." In my opinion, Bash discloses this limitation.

187. Bash discloses that the "the shape and/or opening size of the vents **36a-36c**" are manipulable to vary the "velocity and the volume flow rate of the cooling fluid" that passes through the vents **36a-36c** from the plenum **16** below the raised floor **14** and into the zone where the racks **18a-18d** are located. Ex. 1005, [0019]. Bash also discloses that this manipulation of the vents is in response to said sensed temperature being outside said predetermined temperature range. Ex. 1005, [0050]–[0053].

188. As shown in Figure 3A of Bash, "[f]or those racks determined to have heat loads that do not fall within the predetermined temperature range, i.e., fall outside of $T_{min,set}$ and $T_{max,set}$, it is determined whether the sensed temperature equals or falls below the $T_{min,set}$ at step **308**. In general, the range of temperatures $T_{min,set}$ and $T_{max,set}$ pertains to threshold temperatures to determine whether to increase or decrease the flow of cooling fluid delivered to the racks." Ex. 1005, [0050].

189. Bash further teaches that "[i]f the T_C's of some of the racks are below or equal to the $T_{min,set}$, . . . the vent controller **228** may operate to decrease the volume flow rate and/or the velocity of cooling fluid circulating about those racks at step **310**. The determination of whether to decrease either or both the volume flow rate and the velocity of the cooling fluid may be based upon the detected temperature of

Docusign Envelope ID: F2AC5118-C68A-4644-ABD5-897CFD6B4554

the racks." Ex. 1005, [0051]. Likewise, "[i]f the T_C's of some of the racks exceed the $T_{min,set}$ (i.e., also exceed the $T_{max,set}$), . . . the vent controller **228** may operate to increase the volume flow rate and/or the velocity of cooling fluid circulating about those racks at step **312**." Ex. 1005, [0052].

190. Thus, Bash teaches manipulating said controllable partition to vary said supply of said cooling fluid to said zone in response to said sensed temperature being outside said predetermined temperature range, as recited in limitation 1[d].

2. Claim 2

191. I discuss each limitation of claim 2 in turn below, in conjunction with the relevant disclosures of each claim limitation by Bash.

a. 2[a] – "The method according to claim 1, further comprising: determining whether the measured temperature of said at least one associated rack is below or equal to a predetermined minimum set point temperature; and"

192. Claim 2 recites "*[t]he method according to claim 1, further comprising: determining whether the measured temperature of said at least one associated rack is below or equal to a predetermined minimum set point temperature*." In my opinion, Bash discloses this limitation.

193. As explained above, Bash discloses the method of claim 1 under Patent Owner's expected construction of "partition."

194. As shown in Figure 3A, reproduced below, Bash teaches that "[f]or those racks determined to have heat loads that do not fall within the predetermined

Docusign Envelope ID: F2AC5118-C68A-4644-ABD5-897CFD6B4554

temperature range, i.e., fall outside of $T_{min,set}$ and $T_{max,set}$, it is determined whether the sensed temperature equals or falls below the $T_{min,set}$ at step **308**." Ex. 1005, [0050]. Bash also defines a minimum set point temperature [as] ($T_{min,set}$)." Ex. 1005, FIG 3A, [0049]; *see also* Ex. 1005, FIG. 3B.

195. Limitation 2[a] of the '179 patent is therefore disclosed by Bash.

b. 2[b] – "decreasing the supply of said cooling fluid to said zone in response to said at least one associated rack having a measured temperature that falls below or equal said predetermined minimum set point temperature."

196. Claim 2 recites "*decreasing the supply of said cooling fluid to said zone in response to said at least one associated rack having a measured temperature that falls below or equal said predetermined minimum set point temperature*." In my opinion, Bash discloses this limitation.

197. Bash discloses that "[i]f the T_C's of some of the racks are below or equal to the $T_{min,set}$, . . . the vent controller **228** may operate to decrease the volume flow rate and/or the velocity of cooling fluid circulating about those racks at step **310**." Ex. 1005, FIG. 3A, [0051]; *see also* Ex. 1005, [0022].

198. Limitation 2[b] of the '179 patent is therefore disclosed by Bash.

3. Claim 3

199. I discuss each limitation of claim 3 in turn below, in conjunction with the relevant disclosures of each claim limitation by Bash.

Docusign Envelope ID: F2AC5118-C68A-4644-ABD5-897CFD6B4554

a. 3[a] – "The method according to claim 1, further comprising: sensing a pressure of a supply of said cooling fluid;"

200. Claim 3 recites "*[t]he method according to claim 1, further comprising: sensing a pressure of a supply of said cooling fluid*." In my opinion, Bash discloses this limitation.

201. As explained above, Bash discloses the method of claim 1 under Patent Owner's expected construction of "partition."

202. As shown in Figure 1 of Bash, reproduced and annotated below, Bash discloses further that "a pressure sensor **58** [(annotated in red)] may be configured to measure the pressure of the cooling fluid in the space **16**" below the floor from which cooling fluid is supplied. Ex. 1005, [0027].

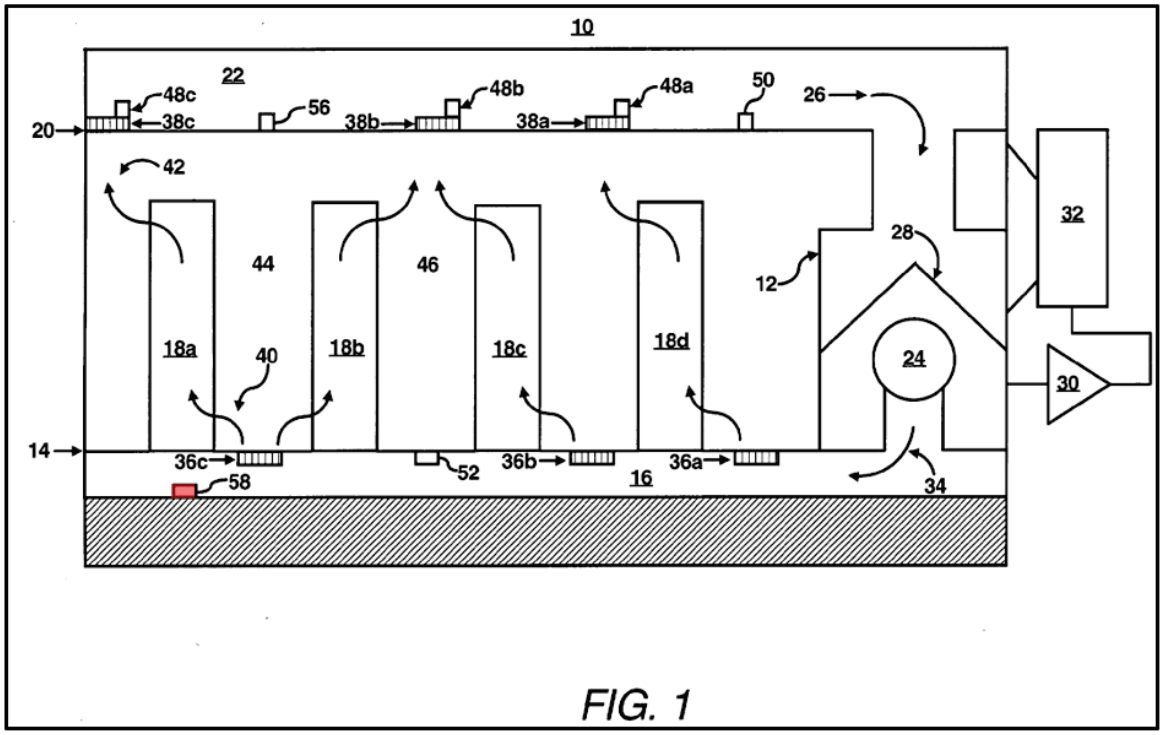

Ex. 1005, FIG. 1 (annotated).

Docusign Envelope ID: F2AC5118-C68A-4644-ABD5-897CFD6B4554

203. Limitation 3[a] of the '179 patent is therefore disclosed by Bash.

b. 3[b] – "determining whether said sensed pressure is within a predetermined pressure range; and"

204. Claim 3 recites "*determining whether said sensed pressure is within a predetermined pressure range*." In my opinion, Bash discloses this limitation.

205. As shown in Figure 3B of Bash, reproduced and annotated below, Bash teaches "determin[ing] whether the measured pressure is within a predetermined pressure range, e.g., a predetermined minimum set point pressure ($P_{min,set}$) and a predetermined maximum set point pressure ($P_{max,set}$), at step **366**" (annotated in pink). Ex. 1005, [0060].

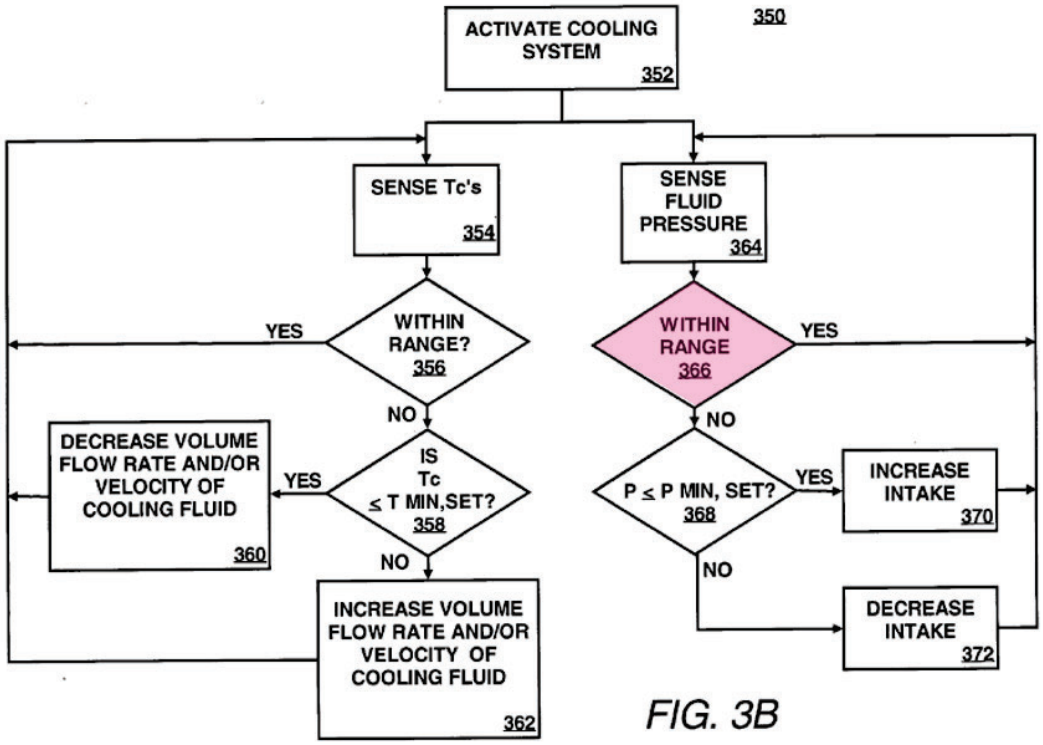

FIG. 3B

Ex. 1006, FIG. 3B (annotated).

Docusign Envelope ID: F2AC5118-C68A-4644-ABD5-897CFD6B4554

206. Limitation 3[b] of the ’179 patent is therefore disclosed by Bash.

c. 3[c] – “varying an output of said cooling device in response to said sensed pressure falling outside of said predetermined pressure range.”

207. Claim 3 recites “*varying an output of said cooling device in response to said sensed pressure falling outside of said predetermined pressure range*.” In my opinion, Bash discloses this limitation.

208. Bash teaches establishing a “predetermined pressure range” of “threshold pressures to determine whether to increase or decrease the movement of cooling fluid, e.g., in the space **16**.” Ex. 1005, [0061].

209. For example, as shown in Figure 3B of Bash, provided above, “[i]f the absolute value of the [measured pressure] P is determined to be below or equal to the $P_{min,set}$, the cooling system controller **246** may operate to increase the cooling fluid intake, e.g., by increasing the speed of the fan **24** at step **370**. Otherwise, if the absolute value of the [measured pressure] P is determined to exceed the $P_{min,set}$, and thereby exceed the $P_{max,set}$, the cooling system controller **246** may operate to decrease the intake of the cooling fluid, e.g., by decreasing the compressor capacity and/or the fan speed, at step **372**.” Ex. 1005, [0062].

210. And because the “cooling device ha[s] a fan,” a POSITA would readily understand that varying the speed of the fan varies the output of the cooling device. Ex. 1005, [0005].

211. Limitation 3[c] of the ’179 patent is therefore disclosed by Bash.

Docusign Envelope ID: F2AC5118-C68A-4644-ABD5-897CFD6B4554

4. Claim 4 – "The method according to claim 2, further comprising: increasing the supply of said cooling fluid to said zone in response to said at least one associated rack having a measured temperature that exceed said predetermined minimum set point temperature."

212. Claim 4 recites "*[t]he method according to claim 2, further comprising: increasing the supply of said cooling fluid to said zone in response to said at least one associated rack having a measured temperature that exceed said predetermined minimum set point temperature*." In my opinion, Bash discloses this claim.

213. As explained above, Bash discloses the method of claim 2, which requires decreasing the cooling fluid supplied to a zone in response to a measured rack temperature being below or equal to a minimum set point temperature. Thus, based on its dependency from that claim, claim 4 requires decreasing the cooling fluid flow to a zone at one time and increasing the cooling fluid flow at another time.

214. Bash's system is capable of both decreasing and increasing the cooling fluid flow to a zone as the sensed temperature conditions dictate. Bash discloses that "[i]f the T_C's of some of the racks exceed the $T_{min,set}$ (i.e., also exceed the $T_{max,set}$), . . . the vent controller **228** may operate to increase the volume flow rate and/or the velocity of cooling fluid circulating about those racks at step **312**." Ex. 1005, [0052]. And as explained previously, T_C is a measured temperature of a rack

Docusign Envelope ID: F2AC5118-C68A-4644-ABD5-897CFD6B4554

and $T_{min,set}$ is the minimum set point temperature of the predetermined range of operating temperatures. Ex. 1005, [0049]; *see also* Ex. 1005, FIG. 3B.

215. Claim 4 of the ’179 patent is therefore anticipated by Bash.

5. Claim 5 – “The method according to claim 3, wherein said step of varying said cooling device output includes determining whether said measured pressure falls below or equals a predetermined minimum set point pressure.”

216. Claim 5 recites “*[t]he method according to claim 3, wherein said step of varying said cooling device output includes determining whether said measured pressure falls below or equals a predetermined minimum set point pressure*.” In my opinion, Bash discloses this claim.

217. As explained above, Bash discloses the method of claim 3.

218. Bash expressly teaches “determin[ing] whether an absolute value of the measured pressure (P) is below or equal to a minimum pressure set point ($P_{min,set}$) at step **368**” and varying the cooling device output at step **370**. Ex. 1005, FIG. 3B, [0061]–[0062].

219. Claim 5 of the ’179 patent is therefore anticipated by Bash.

6. Claim 6 – “The method according to claim 4, further comprising: decreasing an output of said cooling fluid from said cooling device in response to said decrease in cooling fluid supply to said zone exceeding said increase in cooling fluid supply to said zone.”

220. Claim 6 recites, “*[t]he method according to claim 4, further comprising: decreasing an output of said cooling fluid from said cooling device in*

Docusign Envelope ID: F2AC5118-C68A-4644-ABD5-897CFD6B4554

response to said decrease in cooling fluid supply to said zone exceeding said increase in cooling fluid supply to said zone." In my opinion, Bash discloses this claim.

221. Claim 6 depends directly from claim 4 and indirectly from claim 2. A POSITA would understand that this claim requires decreasing the cooling fluid output from the cooling device if the decrease in cooling fluid to the zone (per claim 2) exceeds the increase in cooling fluid to the zone (per claim 4). Bash discloses that if the total amount of decreases in the volume flow rates of the cooling fluid exceeds the total amount of increases in the volume flow rates flow of the cooling fluid, the cooling system controller **246** may decrease the cooling fluid intake at step **316** by decreasing the speed of the fan **24**. Ex. 1005, [0054]. A POSITA understands that the intake and the output of cooling fluid by the cooling system of Bash are correlated. Decreasing the fan speed decreases the output of cooling fluid from the cooling device because the "cooling fluid is circulated in the data center by a cooling device having a fan." Ex. 1005, FIG. 1, [0005].

222. Claim 6 of the '179 patent is therefore anticipated by Bash.

Docusign Envelope ID: F2AC5118-C68A-4644-ABD5-897CFD6B4554

7. Claim 7 – "The method according to claim 4, further comprising: opening a plurality of vents, said vents being configured to supply cooling fluid to said racks; controlling one or more of said plurality vents to decrease the supply of said cooling fluid to said at least one associated rack having a measured temperature that fall below or equal said predetermined minimum set point temperature; and controlling said one or more vents to increase the supply of said cooling fluid to said at least one associated rack having a measured temperature that exceed said predetermined minimum set point temperature."

223. Claim 7 recites "*[t]he method according to claim 4, further comprising: opening a plurality of vents, said vents being configured to supply cooling fluid to said racks; controlling one or more of said plurality vents to decrease the supply of said cooling fluid to said at least one associated rack having a measured temperature that fall below or equal said predetermined minimum set point temperature; and controlling said one or more vents to increase the supply of said cooling fluid to said at least one associated rack having a measured temperature that exceed said predetermined minimum set point temperature.*" In my opinion, Bash discloses this claim.

224. Claim 7 depends directly from claim 4 and indirectly from claim 2. As explained above, Bash discloses the methods of those claims if analyzed according to Patent Owner's apparent contention that a "partition" can be any device capable of manipulating cooling fluid flow. That construction would essentially make claim 7 redundant to claims 2 and 4 since Patent Owner's construction would include a

Docusign Envelope ID: F2AC5118-C68A-4644-ABD5-897CFD6B4554

vent as one type of partition. Therefore, my opinions stated above for claims 2 and 4 also apply to claim 7.

225. As discussed above, Bash discloses opening a plurality of dynamically controllable vents **36a–36c** that are configured to supply cooling fluid to the plurality of racks **18a–18d**. Ex. 1005, [0018], [0048]. Bash further discloses controlling the vents **36a–36c** to decrease the supply of cooling fluid delivered to racks having a measured temperature (T_C) that falls below or equal to a predetermined minimum set point temperature ($T_{min,set}$); and to increase the supply of cooling fluid delivered to racks having a measured temperature (T_C) that exceeds the predetermined minimum set point temperature ($T_{min,set}$). Ex. 1005, [0050]–[0052].

226. Claim 7 of the ’179 patent is therefore anticipated by Bash.

8. **Claim 8 – “The method according to claim 4, further comprising: opening a plurality of returns, said returns being configured to remove cooling fluid from various locations of said data center; and controlling one or more of said plurality of returns to decrease the removal of said cooling fluid from around said at least one associated rack having a measured temperature that fall below or equal said predetermined minimum set point temperature; and controlling said one or more returns to increase the removal of said cooling fluid from around said at least one associated rack having a measured temperature that exceed said predetermined minimum set point temperature.”**

227. Claim 8 recites “*[t]he method according to claim 4, further comprising: opening a plurality of returns, said returns being configured to remove cooling fluid from various locations of said data center; and controlling one or*

Docusign Envelope ID: F2AC5118-C68A-4644-ABD5-897CFD6B4554

more of said plurality of returns to decrease the removal of said cooling fluid from around said at least one associated rack having a measured temperature that fall below or equal said predetermined minimum set point temperature; and controlling said one or more returns to increase the removal of said cooling fluid from around said at least one associated rack having a measured temperature that exceed said predetermined minimum set point temperature." In my opinion, Bash discloses this claim.

228. As explained above, Bash discloses the method of claim 4.

229. Bash further discloses opening a plurality of returns **38a–38c** that are configured to remove cooling fluid from the vicinity of racks in a data center. Ex. 1005, [0048]. [0067]. Bash also discloses controlling the returns **38a–38c** to decrease the removal of cooling fluid from the vicinity of the racks having a measured temperature (T_C) that falls below or equal to a predetermined minimum set point temperature ($T_{min,set}$); and to increase the removal of cooling fluid from the vicinity of the racks having a measured temperature (T_C) that exceeds the predetermined minimum set point temperature ($T_{min,set}$). Ex. 1005, [0050]–[0052].

230. Claim 8 of the '179 patent is therefore anticipated by Bash.

9. Claim 9

231. I discuss each limitation of claim 9 in turn below, in conjunction with the relevant disclosures of each claim limitation by Bash.

Docusign Envelope ID: F2AC5118-C68A-4644-ABD5-897CFD6B4554

a. 9[a] – "The method according to claim 4, further comprising: receiving temperatures from a movable device configured to detect at least one environmental condition at various locations of said data center; "

232. Claim 9 recites "*[t]he method according to claim 4, further comprising: receiving temperatures from a movable device configured to detect at least one environmental condition at various locations of said data center*." In my opinion, Bash discloses this limitation.

233. As explained above, Bash discloses the method of claim 4.

234. Bash further discloses that "a mobile device" may be used "to gather or measure at least one local environmental condition (e.g., temperature, pressure, air flow, humidity, etc.) in the data center **10**. More particularly, the mobile device is configured to travel around the racks to determine the one or more environmental conditions at various locations throughout the data center. . . . The information gathered by the mobile device may be transmitted to the cooling system **202**." Ex. 1005, [0032].

235. Limitation 9[a] of the '179 patent is therefore disclosed by Bash.

b. 9[b] – "determining whether at least one of said sensed temperatures and received temperatures are within a predetermined temperature range; and"

236. Claim 9 recites "*determining whether at least one of said sensed temperatures and received temperatures are within a predetermined temperature range*." In my opinion, Bash discloses this limitation.

Docusign Envelope ID: F2AC5118-C68A-4644-ABD5-897CFD6B4554

237. As shown in Figure 3A, provided below, Bash discloses determining whether each of the measured temperatures are within a predetermined range of operating temperatures. Ex. 1005, [0049].

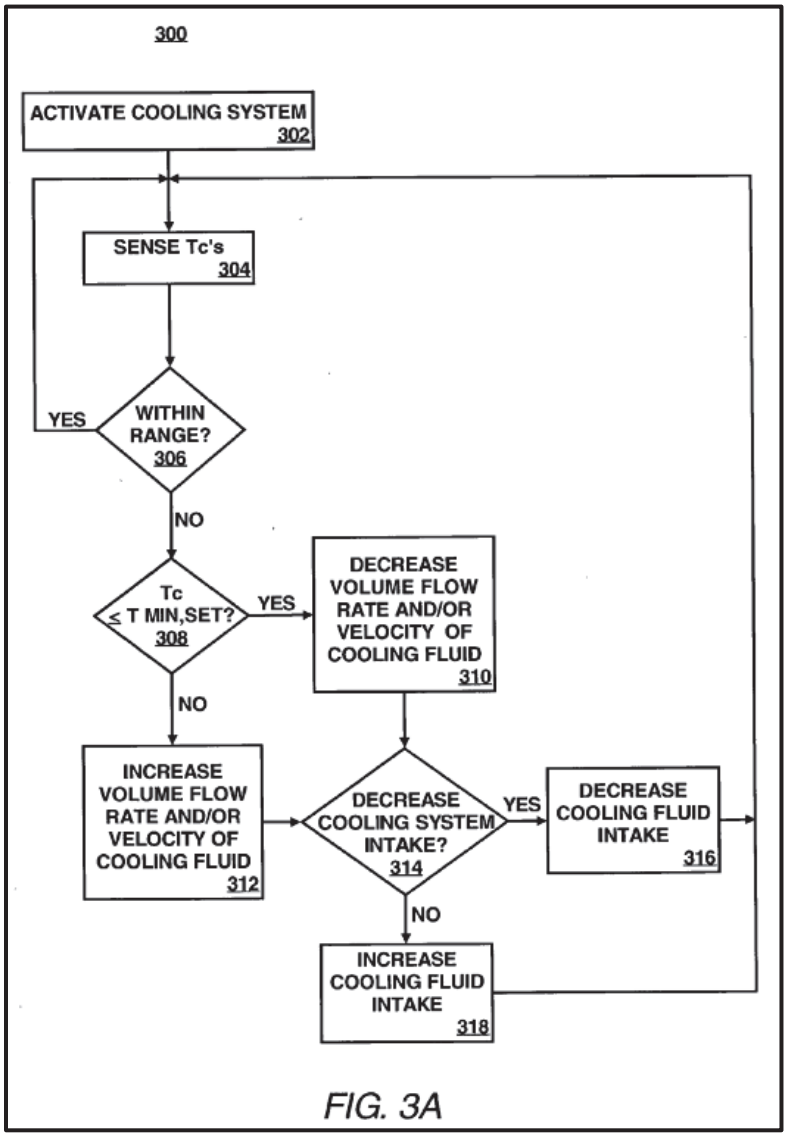

FIG. 3A

Ex. 1005, FIG. 3A.

238. Bash further discloses that the cooling system **202** that receives measured temperatures from the mobile device (Ex. 1005, [0032]) is capable of

Docusign Envelope ID: F2AC5118-C68A-4644-ABD5-897CFD6B4554

performing the method shown in the flow diagram **300** in Figure 3A of Bash (Ex. 1005, [0048]). *See also* Ex. 1005, FIG. 3B; [0060].

239. Limitation 9[b] of the ’179 patent is therefore disclosed by Bash.

c. 9[c] – “manipulating said controllable partition to vary said supply of said cooling fluid to said zone in response to at least one of said sensed and received temperatures being outside of said predetermined temperature range.”

240. Claim 9 recites “*manipulating said controllable partition to vary said supply of said cooling fluid to said zone in response to at least one of said sensed and received temperatures being outside of said predetermined temperature range*.” In my opinion, Bash discloses this limitation.

241. As discussed above with respect to limitation 1[a], the vents **36a-36c** of Bash disclose the controllable partition of the ’179 patent under Patent Owner’s expected construction of “partition.”

242. Bash discloses that the “the shape and/or opening size of the vents **36a-36c**” are manipulable to vary the “velocity and the volume flow rate of the cooling fluid” that passes through the vents and into the zone. Ex. 1005, [0019]. As discussed above, Bash also discloses manipulating the vents in response to sensed temperature being outside of a predetermined temperature range. Ex. 1005, FIG. 3A, [0050]–[0052].

243. Limitation 9[c] of the ’179 patent is therefore disclosed by Bash.

Docusign Envelope ID: F2AC5118-C68A-4644-ABD5-897CFD6B4554

10. Claim 10 – "The method according to claim 4, further comprising: performing a numerical modeling of a temperature distribution and flow characteristics of the data center; and manipulating said cooling device in response to said numerical modeling."

244. Claim 10 recites, "*[t]he method according to claim 4, further comprising: performing a numerical modeling of a temperature distribution and flow characteristics of the data center; and manipulating said cooling device in response to said numerical modeling.*" In my opinion, Bash discloses this claim.

245. As explained above, Bash discloses the method of claim 4.

246. Bash discloses a "method . . . comprising: performing a numerical modeling of a temperature distribution and flow characteristics of the data center; and manipulating said cooling system in response to said numerical modeling." Ex. 1005, Claim 20.

247. Bash also discloses that the cooling system includes a "cooling device having a fan," so a POSITA would understand that manipulating the cooling system is synonymous with manipulating the cooling device. Ex. 1005, [0005].

248. Moreover, Bash discloses inputting velocity of the cooling fluid flowing through various sections of the data center and the distribution of temperature and pressure of the cooling fluid into a computational fluid dynamics (CFD) tool. Bash teaches using "a numerical model of the data center [produced by the CFD tool] to thus determine an optimized cooling distribution of the data center." Ex. 1005, [0066]. Bash also teaches incorporating the numerical model into

Docusign Envelope ID: F2AC5118-C68A-4644-ABD5-897CFD6B4554

the control logic summarized in Figure 3A "to determine whether the cooling system intake should be decreased based upon the heat loads and the fluid flow throughout the data center." Ex. 1005, [0067].

249. Thus, Bash teaches using CFD tools to generate a numerical model of cooling fluid flow, temperature, and/or pressure in a data center. Bash also teaches using that numerical model to manipulate the operation of the air conditioning units (i.e. cooling devices).

250. Claim 10 of the '179 patent is therefore anticipated by Bash.

11. Claim 11 – "The method according to claim 5, further comprising: increasing the output of said cooling device in response to said measured pressure falling below or equaling said predetermined minimum set point pressure."

251. Claim 11 recites, "*[t]he method according to claim 5, further comprising: increasing the output of said cooling device in response to said measured pressure falling below or equaling said predetermined minimum set point pressure.*" In my opinion, Bash discloses this claim.

252. As explained above, Bash discloses the method of claim 5.

253. Bash discloses that if the absolute value of the measured supply air pressure is "below or equal to the $P_{min,set}$, the cooling system controller **246** may operate to increase the cooling fluid intake, e.g., by increasing the speed of the fan **24** at step **370**." Ex. 1005, [0062].

Docusign Envelope ID: F2AC5118-C68A-4644-ABD5-897CFD6B4554

254. And because Bash discloses that the "cooling fluid is circulated in the data center by a cooling device having a fan," a POSITA would understand that increasing the speed of the fan **24** increases the output of cooling fluid from the cooling device. Ex. 1005, [0005].

255. Claim 11 of the '179 patent is therefore anticipated by Bash.

12. Claim 12 – "The method according to claim 5, further comprising: decreasing the output of said cooling device in response to said measured pressure exceeding said predetermined minimum set point pressure."

256. Claim 12 recites, "*[t]he method according to claim 5, further comprising: decreasing the output of said cooling device in response to said measured pressure exceeding said predetermined minimum set point pressure*." In my opinion, Bash discloses this claim.

257. As explained above, Bash discloses the method of claim 5.

258. Bash discloses that if the measured supply air pressure exceeds the $P_{min,set}$, and thereby exceeds the $P_{max,set}$, the cooling system controller **246** may decrease the intake of the cooling fluid by decreasing the fan speed. Ex. 1005, [0062]; *see also* Ex. 1005, FIG. 3B. Bash also explains that $P_{min,set}$ is a minimum pressure set point of a predetermined pressure range. Ex. 1005, [0061]. Thus, $P_{min,set}$ discloses the predetermined minimum set point pressure of claim 12 of the '179 patent.

Docusign Envelope ID: F2AC5118-C68A-4644-ABD5-897CFD6B4554

259. And because Bash discloses that the "cooling fluid is circulated in the data center by a cooling device having a fan," a POSITA would understand that decreasing the speed of the fan **24** decreases the output of cooling fluid from the cooling device. Ex. 1005, [0005].

260. Claim 12 of the '179 patent is therefore anticipated by Bash.

13. Claim 13 – "The method according to claim 6, further comprising: increasing an output of said cooling fluid from said cooling device in response to said decrease in cooling fluid supply to said zone falling below said increase in cooling fluid supply to said zone."

261. Claim 13 recites, "*[t]he method according to claim 6, further comprising: increasing an output of said cooling fluid from said cooling device in response to said decrease in cooling fluid supply to said zone falling below said increase in cooling fluid supply to said zone*." In my opinion, Bash discloses this claim.

262. As explained above, Bash discloses the method of claim 6.

263. Bash further discloses that "if the total amount of increases in the volume flow rates of the cooling fluid exceeds the total amount of decreases, the cooling system controller **246** may operate to increase the cooling system intake at step **318**." Ex. 1005, [0054]. Bash explains that "increas[ing] the cooling fluid intake" may be accomplished "by increasing the speed of the fan **24**." Ex. 1005, [0062]. As previously explained, the intake of cooling fluid by the cooling system of Bash correlates to the output of cooling fluid by the cooling system. And because

Docusign Envelope ID: F2AC5118-C68A-4644-ABD5-897CFD6B4554

Bash discloses that the "cooling fluid is circulated in the data center by a cooling device having a fan," increasing the speed of the fan **24** increases the output of cooling fluid from the cooling device.

264. Claim 13 of the '179 patent is therefore anticipated by Bash.

14. Claim 14 – "The method according to claim 7, further comprising: determining whether said at least one associated rack having a measured temperature that exceeds said predetermined minimum set point temperature is relatively downstream of the supply of said cooling fluid from said at least one associated rack having a measured temperature that fall below or equal said predetermined minimum set point temperature; and controlling said one or more vents to decrease the supply of said cooling fluid to said at least one associated rack being relatively upstream of the supply of said cooling fluid and controlling said one or more vents to increase the supply of said cooling fluid to said at least one associated rack being relatively downstream of the supply of said cooling fluid in response to determining said at least one associated rack having a measured temperature that exceeds said predetermined minimum set point temperature is relatively downstream of the supply of said cooling fluid from said at least one associated rack having a measured temperature that fall below or equal said predetermined minimum set point temperature."

265. Claim 14 recites "*[t]he method according to claim 7, further comprising: determining whether said at least one associated rack having a measured temperature that exceeds said predetermined minimum set point temperature is relatively downstream of the supply of said cooling fluid from said at least one associated rack having a measured temperature that fall below or equal said predetermined minimum set point temperature; and controlling said one or more vents to decrease the supply of said cooling fluid to said at least one*

Docusign Envelope ID: F2AC5118-C68A-4644-ABD5-897CFD6B4554

associated rack being relatively upstream of the supply of said cooling fluid and controlling said one or more vents to increase the supply of said cooling fluid to said at least one associated rack being relatively downstream of the supply of said cooling fluid in response to determining said at least one associated rack having a measured temperature that exceeds said predetermined minimum set point temperature is relatively downstream of the supply of said cooling fluid from said at least one associated rack having a measured temperature that fall below or equal said predetermined minimum set point temperature." In my opinion, Bash discloses this claim.

266. As explained above, Bash discloses the method of claim 7.

267. Bash discloses controlling the vents **36a–36c** so as to selectively vary the supply of cooling fluid to data center zones based on sensed temperatures associated with the racks in each zone. Bash's disclosed cooling system is adapted for a typical data center layout having racks arranged in cold aisles that include floor vents to supply cooling air and hot aisles having returns to remove air. Ex. 1005, FIG. 1, [0020]. Figure 1 illustrates this arrangement and shows cooling air supplied by fan 24 flowing under a raised floor plenum towards adjacent aisles (e.g. **44**, **46**) in the direction of arrow **34**.

Docusign Envelope ID: F2AC5118-C68A-4644-ABD5-897CFD6B4554

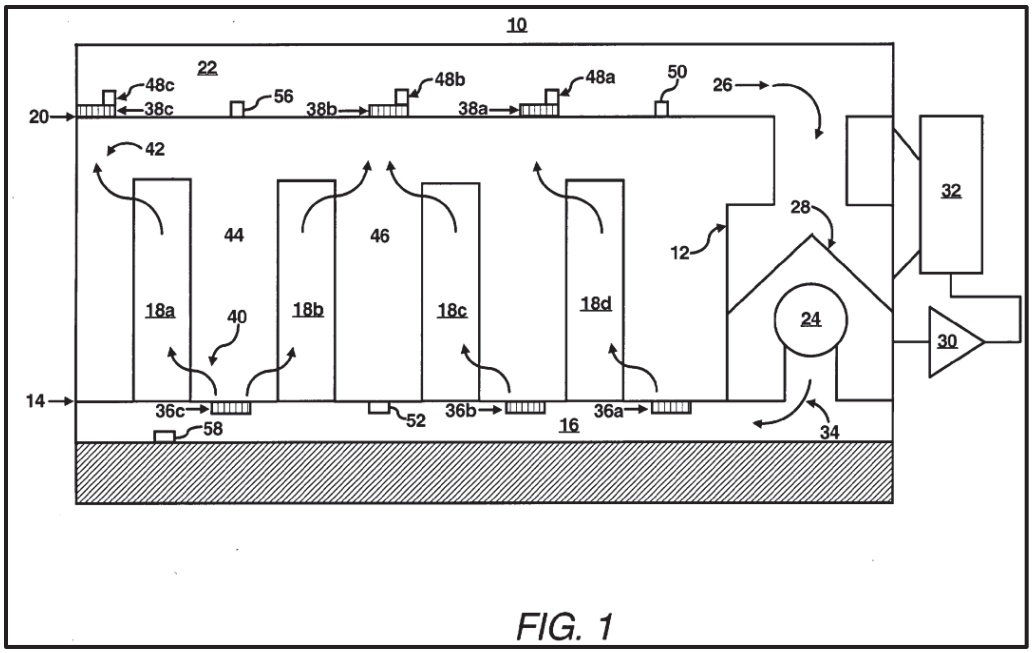

FIG. 1

Ex. 1005, FIG. 1.

268. Racks **18a**, **18b** and associated vent **36c** are downstream of racks **18c**, **18d** and associated vents **36b**, **36a** relative to the location of the cooling air source. It follows directly from Bash's teachings that the controller is operable to increase cooling air flow through vent **36c** in response to a high temperature condition sensed at relatively downstream racks **18a** and/or **18b**, and to decrease cooling air flow through vents **36a** and/or **36b** in response to a low temperature condition sensed at relatively upstream racks **18c** and/or **18d**.

269. Claim 14 of the '179 patent is therefore anticipated by Bash.

Docusign Envelope ID: F2AC5118-C68A-4644-ABD5-897CFD6B4554

15. Claim 15 – "The method according to claim 10, further comprising: implementing said numerical modeling to correlate at least two of temperature, velocity and pressure of said cooling fluid and power draw of at least one of said zone and said racks within said data center to thereby infer a thermal condition throughout said data center, wherein said manipulating step further comprises manipulating said cooling device in response to said inferred thermal condition."

270. Claim 15 recites, "*[t]he method according to claim 10, further comprising: implementing said numerical modeling to correlate at least two of temperature, velocity and pressure of said cooling fluid and power draw of at least one of said zone and said racks within said data center to thereby infer a thermal condition throughout said data center, wherein said manipulating step further comprises manipulating said cooling device in response to said inferred thermal condition*." In my opinion, Bash discloses this claim.

271. As explained above, Bash discloses the method of claim 10.

272. Bash teaches "[a] correlation of one or more of the following properties: velocity of the cooling fluid flowing through various sections of the data center, distribution of temperature and pressure of the cooling fluid in the data center, and the power draw into the racks, may be created based on the numerical modeling. The correlation may be used to infer thermal conditions throughout the data center when only a minimum number of sensors are available during operation of the cooling system." Ex. 1005, [0066]. Bash teaches that the numerical model

Docusign Envelope ID: F2AC5118-C68A-4644-ABD5-897CFD6B4554

may be incorporated into the control logic to determine whether the cooling system intake should be adjusted. Ex. 1005, [0067].

273. Bash also recites this technique in its claims: "implementing said numerical modeling to correlate at least two of temperature, velocity and pressure of said cooling fluid and power draw of said racks within said data center to thereby infer a thermal condition throughout said data center, wherein said manipulating step further comprises manipulating said cooling system in response to said inferred thermal condition." Ex. 1005, Claim 21. Bash discloses that the cooling system includes a "cooling device having a fan," so a POSITA would understand that manipulating the cooling system is synonymous with manipulating the cooling device. Ex. 1005, [0005].

274. Claim 15 of the '179 patent is therefore anticipated by Bash.

B. GROUND 2: CLAIMS 1–7 AND 10–15 ARE ANTICIPATED BY PATEL

275. For the reasons set forth below, it is my opinion that Patel discloses all of the limitations of claims 1–7 and 10–15 of the '179 patent if the claims are construed according to Patent Owner's broad litigation assertions regarding the meaning of "partition."

1. Claim 1

276. I discuss each limitation of claim 1 in turn below, in conjunction with the relevant disclosures of each claim limitation by Patel.

Docusign Envelope ID: F2AC5118-C68A-4644-ABD5-897CFD6B4554

a. 1[pre] – "A method of cooling a plurality of racks in a data center, said method comprising:"

277. The preamble of claim 1 recites, "*[a] method of cooling a plurality of racks in a data center, said method comprising*."

278. I have been informed that claim preambles are generally not limiting. In any case, I believe that Patel discloses the preamble.

279. For example, Patel discloses "a method of cooling a plurality of racks in a data center." Ex. 1006, 2:27–29; Claim 14.

280. Thus, if the preamble is a limitation of claim 1, Patel discloses limitation 1[pre].

b. 1[a] – "activating a cooling device and opening a controllable partition configured to vary a supply of cooling fluid within a zone of said data center, said zone including at least one associated rack of said plurality of racks;"

281. Claim 1 further recites "*activating a cooling device and opening a controllable partition configured to vary a supply of cooling fluid within a zone of said data center, said zone including at least one associated rack of said plurality of racks.*" In my opinion, Patel discloses this limitation.

282. Patel discloses a data center **10** containing a cooling system **12**, a zone above a raised floor **14** with a plurality of racks **18a–18d** that house a plurality of electronic components, and a space **16** beneath the raised floor **14** that may function as a plenum to deliver cooling fluid (*e.g.*, air) from the cooling system **12** to the

Docusign Envelope ID: F2AC5118-C68A-4644-ABD5-897CFD6B4554

plurality of racks **18a–18d**. Ex. 1006, 3:48–54; 4:7–44; Figure 1 (reproduced and annotated below). "The cooling system **12** generally includes a fan **20** for supplying cooling fluid into the space **16** (e.g., plenum)" as indicated by arrow **32**. Ex. 1006, 4:44–45; 5:6–27; Figure 1. "Air is supplied into the fan **20** from the heated air in the data center **10** as indicated by arrows **22** and **24**" that is cooled by the cooling system **12** before being delivered into the space **16** (e.g., plenum). Ex. 1006, 4:45–52; 5:6–27.

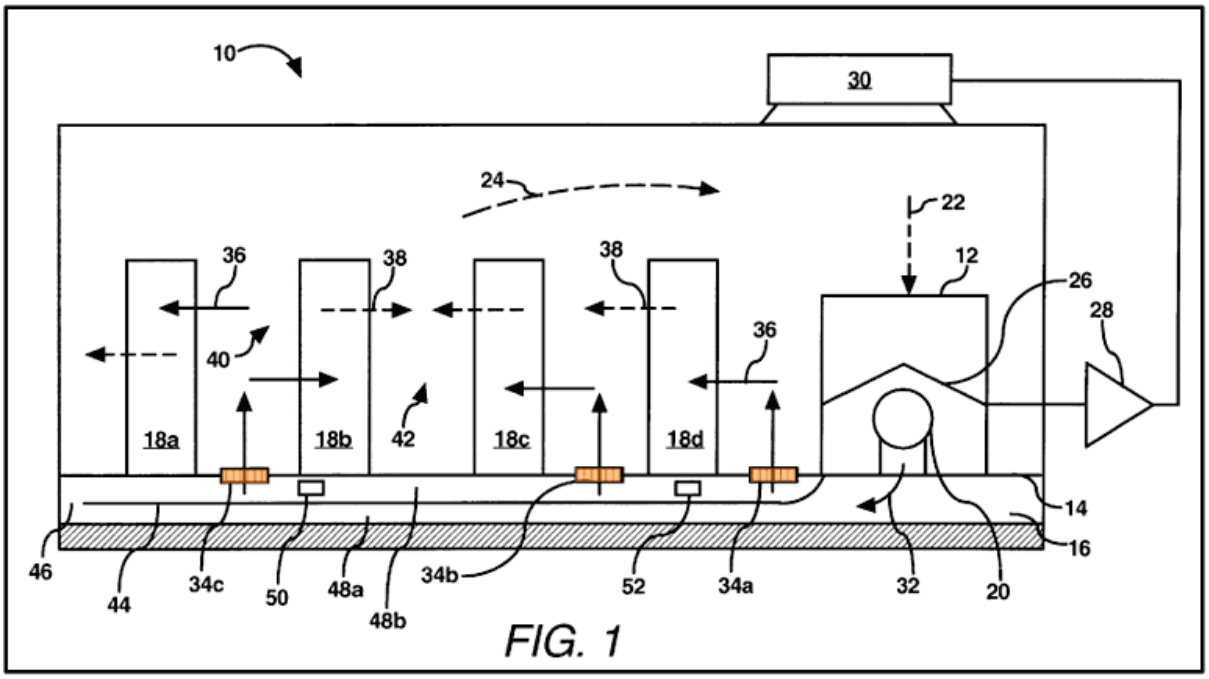

Ex. 1006, FIG. 1 (annotated).

283. Patel further discloses the cooling fluid being delivered to the plurality of racks **18a–18d** by "flow[ing] out of the raised floor **14** through a plurality of dynamically controllable vents **34a–34c** [(annotated in orange)] that generally operate to control the velocity and the volume flow rate of the cooling fluid

Docusign Envelope ID: F2AC5118-C68A-4644-ABD5-897CFD6B4554

therethrough" and into the zone above the raised floor **14** where the plurality of racks **18a–18d** are located. Ex. 1006, 5:6–28.

284. Patel also teaches a method of operating the cooling system in the flow diagram **300** of Figure 3A of Patel, provided below. In the first step **302** of this method, "the cooling system **202** is activated and the vents **206–210** . . . are opened." Ex. 1006, 10:16–17.

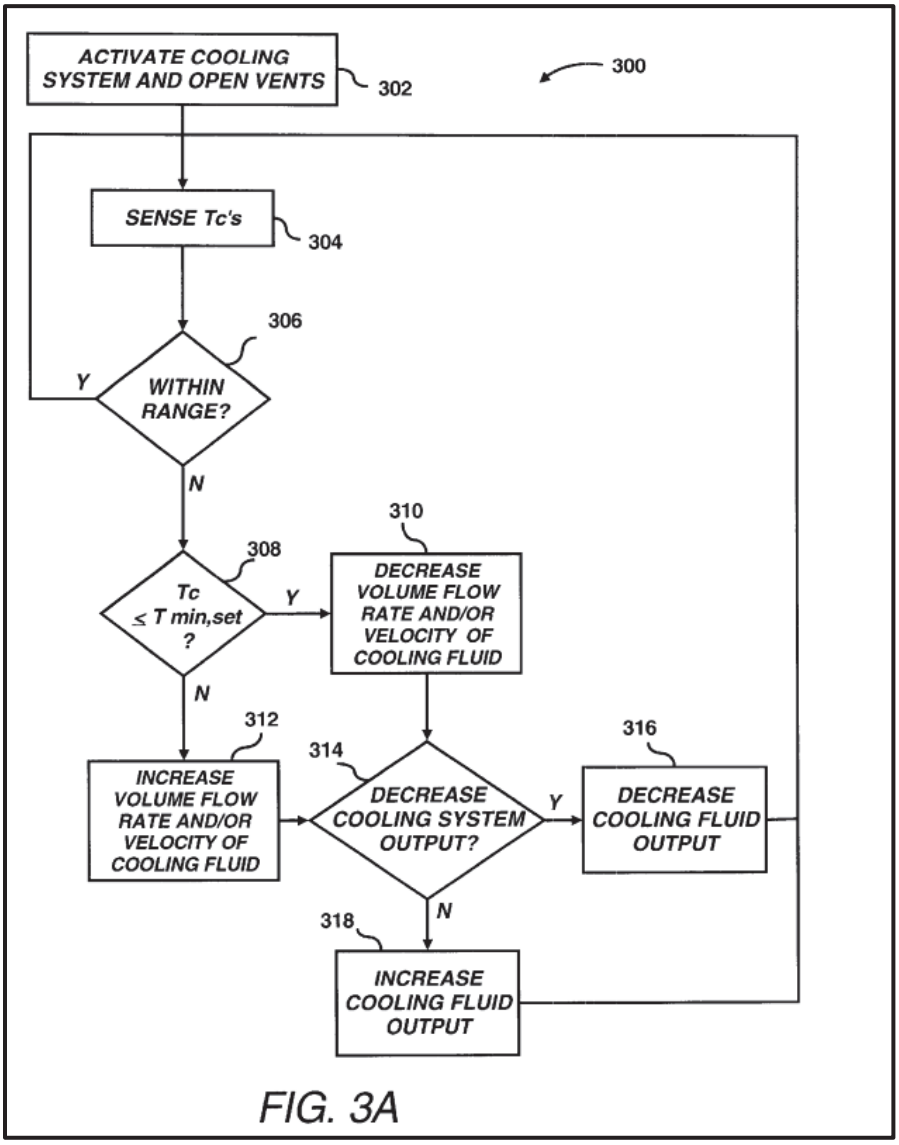

Ex. 1006, FIG. 3A.

Vertiv Ex. 1002
Vertiv v. Valtrus

Docusign Envelope ID: F2AC5118-C68A-4644-ABD5-897CFD6B4554

285. Patel also discloses that the "smart cooling system for cooling racks in a data center . . . includes a cooling device for supplying cooling fluid to the racks. The cooling device includes a variable output fan and a variable capacity compressor." Ex. 1006, 2:16–19.

286. Patel discloses the cooling fluid of the '179 patent under both Petitioner's proposed construction of "cooling fluid" and Patent Owner's expected construction, which each include cooling air. Patel teaches that "cooling fluid (e.g., *air*)" is delivered "to various areas of a data center" Ex. 1006, 1:6–8 (emphasis added). Thus, Patel discloses the cooling fluid recited in claim 1 of the '179 patent under Petitioner's proposed construction (i.e. air).

287. With regard to a "controllable partition," Patel's controllable vents (e.g., **34a-34c**) disclose the controllable partition under Patent Owner's expected construction of "partition" to encompass any device capable of manipulating the flow of cooling fluid. As discussed above, the dynamically controllable vents **34a-34c** operate to control the velocity and the volume flow rate of the cooling air into aisles of the data center containing racks. Ex. 1006, 5:8–11. For example, Patel teaches that the "cool aisles **40** are those aisles that include the vents **3[4]a-3[4]c** and thus receive cooling fluid for delivery to the racks **18a-18d**." Ex. 1006, 5:23–26.

Docusign Envelope ID: F2AC5118-C68A-4644-ABD5-897CFD6B4554

288. I have therefore concluded that Patel discloses limitation 1[a] under Patent Owner's expected construction of "partition."

c. 1[b] – "sensing the temperature of said at least one associated rack;"

289. Claim 1 recites "*sensing the temperature of said at least one associated rack.*" In my opinion, Patel discloses this limitation.

290. Patel teaches detecting temperatures via "a plurality of temperature sensors **212-216**, e.g., thermocouples, [that] may be positioned at various positions around the subsystems and/or the racks **18a-18d**." Ex. 1006, 7:16–19. Patel also teaches that the cooling system "may include any reasonably suitable number of temperature sensors to thus measure the temperatures of any reasonably suitable number of racks **18a-18d** or portions thereof." 1006, 7:37–41.

291. Thus, Patel teaches sensing the temperature of said at least one associated rack, as recited in limitation 1[b].

d. 1[c] – "determining whether said sensed temperature is within a predetermined temperature range; and"

292. Claim 1 recites "*determining whether said sensed temperature is within a predetermined temperature range*." In my opinion, Patel discloses this limitation.

293. Patel discloses that the temperatures of the components (T_C's) are individually sensed by the temperature sensors and then it is determined whether each measured temperature is within a predetermined range of operating

Docusign Envelope ID: F2AC5118-C68A-4644-ABD5-897CFD6B4554

temperatures, e.g., between $T_{max,set}$ and $T_{min,set}$. Ex. 1006, 10:35–43; *see also* Ex. 1006, FIGS. 3A and 3B.

294. Thus, Patel teaches determining whether said sensed temperature is within a predetermined temperature range, as recited in claim 1.

e. 1[d] – "manipulating said controllable partition to vary said supply of said cooling fluid to said zone in response to said sensed temperature being outside said predetermined temperature range."

295. Claim 1 recites "*manipulating said controllable partition to vary said supply of said cooling fluid to said zone in response to said sensed temperature being outside said predetermined temperature range*." In my opinion, Patel discloses this limitation.

296. As discussed above with respect to limitation 1[a], the vents of Patel disclose the controllable partition Patent Owner's expected construction of "partition."

297. Patel further discloses that the "the shape and/or opening size of the vents **34a-34c**" are manipulable to vary the "velocity and the volume flow rate of the cooling fluid" that passes through the vents and into the zone containing racks **18a-18d**. Ex. 1006, 5:7–17. Patel also discloses manipulating the vents in response to said sensed temperature being outside said predetermined temperature range. Thus, "[i]f the T_C's of some of the racks are below or equal to the $T_{min,set}$, the vent controller **204** may operate to decrease the volume flow rate and/or the velocity of

Docusign Envelope ID: F2AC5118-C68A-4644-ABD5-897CFD6B4554

cooling fluid to those racks at step **310**." Ex. 1006, 11:6–0. Likewise, "[i]f the T_C's of some of the racks exceed the $T_{min,set}$ (i.e., also exceed the $T_{max,set}$), the vent controller **204** may operate to increase the volume flow rate and/or the velocity of cooling fluid to those racks at step **312**." Ex. 1006, 11:20–23.

298. Thus, Patel teaches manipulating said controllable partition to vary said supply of said cooling fluid to said zone in response to said sensed temperature being outside said predetermined temperature range, as recited in limitation 1[d].

2. Claim 2

299. I discuss each limitation of claim 2 in turn below, in conjunction with the relevant disclosures of each claim limitation by Patel.

a. 2[a] – "The method according to claim 1, further comprising: determining whether the measured temperature of said at least one associated rack is below or equal to a predetermined minimum set point temperature; and"

300. Claim 2 recites "*[t]he method according to claim 1, further comprising: determining whether the measured temperature of said at least one associated rack is below or equal to a predetermined minimum set point temperature*." In my opinion, Patel discloses this limitation.

301. As explained above, Patel discloses the method of claim 1 under Patent Owner's expected construction of "partition."

Docusign Envelope ID: F2AC5118-C68A-4644-ABD5-897CFD6B4554

302. As explained in relation to claim 1, Patel's vent controller determines whether sensed rack temperatures are below a preset temperature range. Ex. 1006, 10:38–43, 10:53–61.

303. Limitation 2[a] of the '179 patent is therefore disclosed by Patel.

b. 2[b] – "decreasing the supply of said cooling fluid to said zone in response to said at least one associated rack having a measured temperature that falls below or equal said predetermined minimum set point temperature."

304. Claim 2 recites "*decreasing the supply of said cooling fluid to said zone in response to said at least one associated rack having a measured temperature that falls below or equal said predetermined minimum set point temperature*." In my opinion, Patel discloses this limitation.

305. Referring again to Figure 3A, shown above, Patel discloses that "[i]f the T_C's of some of the racks are below or equal to the $T_{min,set}$, the vent controller **204** may operate to decrease the volume flow rate and/or the velocity of cooling fluid to those racks at step **310**." Ex. 1006, 11:6–9.

306. Limitation 2[b] of the '179 patent is therefore disclosed by Patel.

3. Claim 3

307. I discuss each limitation of claim 3 in turn below, in conjunction with the relevant disclosures of each claim limitation by Patel.

Docusign Envelope ID: F2AC5118-C68A-4644-ABD5-897CFD6B4554

a. 3[a] – "The method according to claim 1, further comprising: sensing a pressure of a supply of said cooling fluid;"

308. Claim 3 recites "*[t]he method according to claim 1, further comprising: sensing a pressure of a supply of said cooling fluid*." In my opinion, Patel discloses this limitation.

309. As explained above, Patel discloses the method of claim 1.

310. Patel also teaches that "the pressure of the cooling fluid supplying the vents **206-210** may be measured by a pressure sensor **232**." Ex. 1006, 12:52–54.

311. Limitation 3[a] of the '179 patent is therefore disclosed by Patel.

b. 3[b] – "determining whether said sensed pressure is within a predetermined pressure range; and"

312. Claim 3 recites "*determining whether said sensed pressure is within a predetermined pressure range*." In my opinion, Patel discloses this limitation.

313. As shown in Figure 3B of Patel, reproduced and annotated below, Patel teaches "determin[ing] whether the measured pressure is within a predetermined pressure range, e.g., a predetermined minimum set point pressure ($P_{min,set}$) and a predetermined maximum set point pressure ($P_{max,set}$), at step **366**" (annotated in pink). Ex. 1006, 12:56–60.

Docusign Envelope ID: F2AC5118-C68A-4644-ABD5-897CFD6B4554

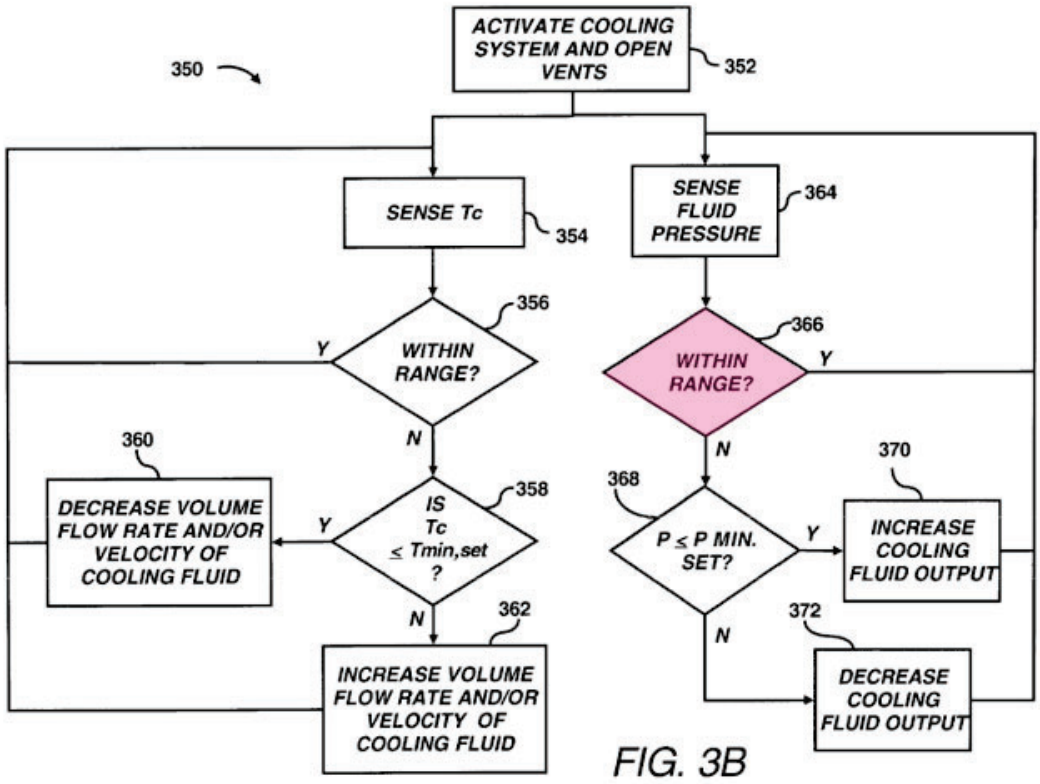

Ex. 1006, FIG. 3B (annotated).

314. Limitation 3[b] of the ’179 patent is therefore anticipated by Patel.

c. 3[c] – “varying an output of said cooling device in response to said sensed pressure falling outside of said predetermined pressure range.”

315. Claim 3 recites “*varying an output of said cooling device in response to said sensed pressure falling outside of said predetermined pressure range*.” In my opinion, Patel discloses this limitation.

316. Patel teaches that “the predetermined pressure range pertains to the threshold pressures to determine whether to increase or decrease the supply of fluid, e.g., in the second chamber **48b**” of the space (plenum) **16** below the raised floor **14** of the data center. Ex. 1006, 13:4–7.

Docusign Envelope ID: F2AC5118-C68A-4644-ABD5-897CFD6B4554

317. For example, as shown in Figure 3B of Patel, provided above, "[i]f the [measured] P[ressure] is determined to be below or equal to the $P_{min,set}$, the cooling system controller **222** may operate to increase the cooling fluid output, e.g., by increasing the compressor capacity and/or the fan output, at step **370**. Otherwise, if the [measured] P[ressure] is determined to exceed the $P_{min,set}$, and thereby exceed the $P_{max,set}$, the cooling system controller **222** may operate to decrease cooling fluid output, e.g., by decreasing the compressor capacity and/or the fan output, at step **372**." Ex. 1006, 13:13–20. Varying the fan output varies the cooling air output of the cooling device.

318. Limitation 3[c] of the '179 patent is therefore disclosed by Patel.

4. Claim 4 – "The method according to claim 2, further comprising: increasing the supply of said cooling fluid to said zone in response to said at least one associated rack having a measured temperature that exceed said predetermined minimum set point temperature."

319. Claim 4 recites "*[t]he method according to claim 2, further comprising: increasing the supply of said cooling fluid to said zone in response to said at least one associated rack having a measured temperature that exceed said predetermined minimum set point temperature*." In my opinion, Patel discloses this claim.

320. As explained above, Patel discloses the method of claim 2, which requires decreasing the cooling fluid supplied to a zone in response to a measured rack temperature being below or equal to a minimum set point temperature. Thus,

Docusign Envelope ID: F2AC5118-C68A-4644-ABD5-897CFD6B4554

based on its dependency from that claim, claim 4 requires decreasing the cooling fluid flow to a zone at one time and increasing the cooling fluid flow at another time.

321. Patel's system is capable of both decreasing and increasing the cooling fluid flow to a zone as the sensed temperature conditions dictate. Patel teaches that "[i]f the T_C's of some of the racks exceed the $T_{min,set}$ (i.e., also exceed the $T_{max,set}$), the vent controller **204** may operate to increase the volume flow rate and/or the velocity of cooling fluid to those racks at step **312**." Ex. 1006, 11:20–23. Patel also defines T_C as a measured temperature of a component (such as a rack) and $T_{min,set}$ as the "minimum set point temperature" of the "predetermined range of operating temperatures." Ex. 1006, 10:35–43.

322. Claim 4 of the '179 patent is therefore disclosed by Patel.

5. Claim 5 – "The method according to claim 3, wherein said step of varying said cooling device output includes determining whether said measured pressure falls below or equals a predetermined minimum set point pressure."

323. Claim 5 recites "*[t]he method according to claim 3, wherein said step of varying said cooling device output includes determining whether said measured pressure falls below or equals a predetermined minimum set point pressure*." In my opinion, Patel discloses this claim.

324. As explained above, Patel discloses the method of claim 3.

Docusign Envelope ID: F2AC5118-C68A-4644-ABD5-897CFD6B4554

325. Patel teaches "determin[ing] whether the measured pressure (P) is below or equal to a minimum pressure set point ($P_{min,set}$) at step **368**." Ex. 1006, FIG. 3B; 13:2–4.

326. Claim 5 of the '179 patent is therefore anticipated by Patel.

6. Claim 6 – "The method according to claim 4, further comprising: decreasing an output of said cooling fluid from said cooling device in response to said decrease in cooling fluid supply to said zone exceeding said increase in cooling fluid supply to said zone."

327. Claim 6 recites, "*[t]he method according to claim 4, further comprising: decreasing an output of said cooling fluid from said cooling device in response to said decrease in cooling fluid supply to said zone exceeding said increase in cooling fluid supply to said zone.*" In my opinion, Patel discloses this claim.

328. As explained above, Patel discloses the method of claim 4.

329. Patel discloses that "if the total amount of decreases in the volume flow rates of the cooling fluid exceeds the total amount of increases in the volume flow rates flow of the cooling fluid, the cooling system controller **222** may operate to decrease the cooling fluid output at step **316**." Ex. 1006, 11:57–61. Patel indicates that the cooling fluid output may be decreased by decreasing the output of the fan **226**. Ex. 1006, 11:51–53.

330. Patel also describes the additional step of claim 6 of the '179 patent in its own claims. Claim 16 of Patel recites: "[t]he method according to claim 15,

Docusign Envelope ID: F2AC5118-C68A-4644-ABD5-897CFD6B4554

further comprising: decreasing an output of said cooling fluid from said cooling system in response to said decrease in cooling fluid supply to said racks exceeding said increase in cooling fluid supply to said racks." Ex. 1006, 17:45–50.

331. Therefore, claim 6 of the '179 patent is anticipated by Patel for at least these reasons.

7. **Claim 7 – "The method according to claim 4, further comprising: opening a plurality of vents, said vents being configured to supply cooling fluid to said racks; controlling one or more of said plurality vents to decrease the supply of said cooling fluid to said at least one associated rack having a measured temperature that fall below or equal said predetermined minimum set point temperature; and controlling said one or more vents to increase the supply of said cooling fluid to said at least one associated rack having a measured temperature that exceed said predetermined minimum set point temperature."**

332. Claim 7 recites "*[t]he method according to claim 4, further comprising: opening a plurality of vents, said vents being configured to supply cooling fluid to said racks; controlling one or more of said plurality vents to decrease the supply of said cooling fluid to said at least one associated rack having a measured temperature that fall below or equal said predetermined minimum set point temperature; and controlling said one or more vents to increase the supply of said cooling fluid to said at least one associated rack having a measured temperature that exceed said predetermined minimum set point temperature.*" In my opinion, Patel discloses this claim.

Vertiv Ex. 1002
Vertiv v. Valtrus

Docusign Envelope ID: F2AC5118-C68A-4644-ABD5-897CFD6B4554

333. As explained above, claim 7 is redundant to claims 2 and 4 under Patent Owner's broad application of the term "partition," which includes any device that can manipulate cooling fluid flow and therefore would treat a vent as a type of partition. Therefore, my opinions stated above for claims 2 and 4 also apply to claim 7.

334. As explained above, Patel discloses the methods of claims 4 and 2.

335. Patel discloses opening a plurality of dynamically controllable vents **34a–34c** that are configured to supply cooling fluid to the plurality of racks **18a–18d**. Ex. 1006, 5:6–28. Patel further discloses controlling the vents **34a–34c** to decrease the supply of cooling fluid delivered to racks having a measured temperature (T_C) that falls below or equal to a predetermined minimum set point temperature ($T_{min,set}$); and to increase the supply of cooling fluid delivered to racks having a measured temperature (T_C) that exceeds the predetermined minimum set point temperature ($T_{min,set}$). Ex. 1006, 5:11–17; 11:6–23.

336. Claim 7 of the '179 patent is therefore anticipated by Patel.

8. Claim 10 – "The method according to claim 4, further comprising: performing a numerical modeling of a temperature distribution and flow characteristics of the data center; and manipulating said cooling device in response to said numerical modeling."

337. Claim 10 recites, "*[t]he method according to claim 4, further comprising: performing a numerical modeling of a temperature distribution and*

Docusign Envelope ID: F2AC5118-C68A-4644-ABD5-897CFD6B4554

flow characteristics of the data center; and manipulating said cooling device in response to said numerical modeling." In my opinion, Patel discloses this claim.

338. As explained above, Patel discloses the method of claim 4.

339. Patel discloses inputting cooling fluid flow velocities and temperature and pressure distribution data into a computational fluid dynamics (CFD) tool and generating a numerical model of the data center "to determine an optimal manner in which the air conditioning units may be operated as well as the flow of the cooling fluid through the vents to adequately cool the racks based upon an analysis of the data center layout and the heat loads." Ex. 1006, 14:27–40.

340. Thus, Patel teaches using CFD tools to generate a numerical model of cooling fluid flow, temperature, and/or pressure in a data center. Patel also teaches using that numerical model to manipulate the operation of the air conditioning units (i.e., cooling devices), for example to determine whether the cooling fluid output should be decreased based on heat loads and fluid flows throughout the data center. Ex. 1006, 14:52–62.

341. Patel also discloses this step in Patel's claim 21 which recites: "performing a numerical modeling of a temperature distribution and flow characteristics of the data center; and manipulating said cooling system in response to said numerical modeling." Ex. 1006, 18:4–9.

342. Claim 10 of the '179 patent is therefore anticipated by Patel.

Docusign Envelope ID: F2AC5118-C68A-4644-ABD5-897CFD6B4554

9. Claim 11 – "The method according to claim 5, further comprising: increasing the output of said cooling device in response to said measured pressure falling below or equaling said predetermined minimum set point pressure."

343. Claim 11 recites, "*[t]he method according to claim 5, further comprising: increasing the output of said cooling device in response to said measured pressure falling below or equaling said predetermined minimum set point pressure.*" In my opinion, Patel discloses this claim.

344. As explained above, Patel discloses the method of claim 5.

345. Patel discloses that the "cooling device [] suppl[ies] cooling fluid to the racks" and "includes a variable output fan and a variable capacity compressor." Ex. 1006, 2:16–19. Patel's system measures pressure of cooling air in the raised floor supply plenum, and "[i]f the [measured pressure] P is determined to be below or equal to the $P_{min,set}$, the cooling system controller **222** may operate to increase the cooling fluid output, e.g., by increasing the compressor capacity and/or the fan output, at step **370**." Ex. 1006, 13:13–16.

346. Claim 11 of the '179 patent is therefore anticipated by Patel.

10. Claim 12 – "The method according to claim 5, further comprising: decreasing the output of said cooling device in response to said measured pressure exceeding said predetermined minimum set point pressure."

347. Claim 12 recites, "*[t]he method according to claim 5, further comprising: decreasing the output of said cooling device in response to said*

Docusign Envelope ID: F2AC5118-C68A-4644-ABD5-897CFD6B4554

measured pressure exceeding said predetermined minimum set point pressure." In my opinion, Patel discloses this claim.

348. As explained above, Patel discloses the method of claim 5.

349. In Patel's system, "if the [measured] P[ressure] is determined to exceed the $P_{min,set}$, and thereby exceed the $P_{max,set}$, the cooling system controller **222** may operate to decrease cooling fluid output, e.g., by decreasing the compressor capacity and/or the fan output, at step **372**." Ex. 1006, 13:13–20. Patel also explains that $P_{min,set}$ is a "predetermined minimum set point pressure." Ex. 1006, 12:58.

350. And because the cooling device in Patel outputs cooling fluid and includes a compressor and a fan, decreasing the cooling fluid output in Patel is synonymous with decreasing the output of the cooling device. Ex. 1006, 2:17–19.

351. Claim 12 of the '179 patent is therefore anticipated by Patel.

11. Claim 13 – "The method according to claim 6, further comprising: increasing an output of said cooling fluid from said cooling device in response to said decrease in cooling fluid supply to said zone falling below said increase in cooling fluid supply to said zone."

352. Claim 13 recites, "*[t]he method according to claim 6, further comprising: increasing an output of said cooling fluid from said cooling device in response to said decrease in cooling fluid supply to said zone falling below said increase in cooling fluid supply to said zone*." In my opinion, Patel discloses this claim.

353. As explained above, Patel discloses the method of claim 6.

Docusign Envelope ID: F2AC5118-C68A-4644-ABD5-897CFD6B4554

354. Patel's cooling system controller 222 can determine whether to adjust the cooling fluid output of the cooling device, such as by varying the fan speed. Ex. 1006, 11:51–53. Patel discloses that "if the total amount of increases in the volume flow rates of the cooling fluid exceeds the total amount of decreases, the cooling system controller **222** may operate to increase the cooling system output at step **318**." Ex. 1006, 11:61–65.

355. Also, claim 17 of Patel recites: "increasing an output of said cooling fluid from said cooling system in response to said decrease in cooling fluid supply to said racks falling below said increase in cooling fluid supply to said racks." Ex. 1006, 17:51–56.

356. For at least these reasons, claim 13 of the '179 patent is anticipated by Patel.

Vertiv Ex. 1002
Vertiv v. Valtrus

Docusign Envelope ID: F2AC5118-C68A-4644-ABD5-897CFD6B4554

12. Claim 14 – "The method according to claim 7, further comprising: determining whether said at least one associated rack having a measured temperature that exceeds said predetermined minimum set point temperature is relatively downstream of the supply of said cooling fluid from said at least one associated rack having a measured temperature that fall below or equal said predetermined minimum set point temperature; and controlling said one or more vents to decrease the supply of said cooling fluid to said at least one associated rack being relatively upstream of the supply of said cooling fluid and controlling said one or more vents to increase the supply of said cooling fluid to said at least one associated rack being relatively downstream of the supply of said cooling fluid in response to determining said at least one associated rack having a measured temperature that exceeds said predetermined minimum set point temperature is relatively downstream of the supply of said cooling fluid from said at least one associated rack having a measured temperature that fall below or equal said predetermined minimum set point temperature."

357. Claim 14 recites "*[t]he method according to claim 7, further comprising: determining whether said at least one associated rack having a measured temperature that exceeds said predetermined minimum set point temperature is relatively downstream of the supply of said cooling fluid from said at least one associated rack having a measured temperature that fall below or equal said predetermined minimum set point temperature; and controlling said one or more vents to decrease the supply of said cooling fluid to said at least one associated rack being relatively upstream of the supply of said cooling fluid and controlling said one or more vents to increase the supply of said cooling fluid to said at least one associated rack being relatively downstream of the supply of said cooling fluid in response to determining said at least one associated rack having a*

Docusign Envelope ID: F2AC5118-C68A-4644-ABD5-897CFD6B4554

measured temperature that exceeds said predetermined minimum set point temperature is relatively downstream of the supply of said cooling fluid from said at least one associated rack having a measured temperature that fall below or equal said predetermined minimum set point temperature." In my opinion, Patel discloses this claim.

358. As explained above, Patel discloses the method of claim 7.

359. Patel discloses controlling the vents **34a–34c** to selectively vary the supply of cooling fluid to data center zones based on sensed temperatures associated with the racks in each zone. Ex. 1006, 5:8–17. Patel's disclosed cooling system is adapted for a typical data center layout having racks arranged in cold aisles that include floor vents to supply cooling air and hot aisles that receive air heated by the computer equipment. Ex. 1006, FIG. 1, 5:21–28. Figure 1 illustrates this arrangement and shows cooling air supplied by fan 20 flowing under a raised floor plenum towards adjacent aisles (e.g. **40**, **42**) in the direction of arrow **32**.

Docusign Envelope ID: F2AC5118-C68A-4644-ABD5-897CFD6B4554

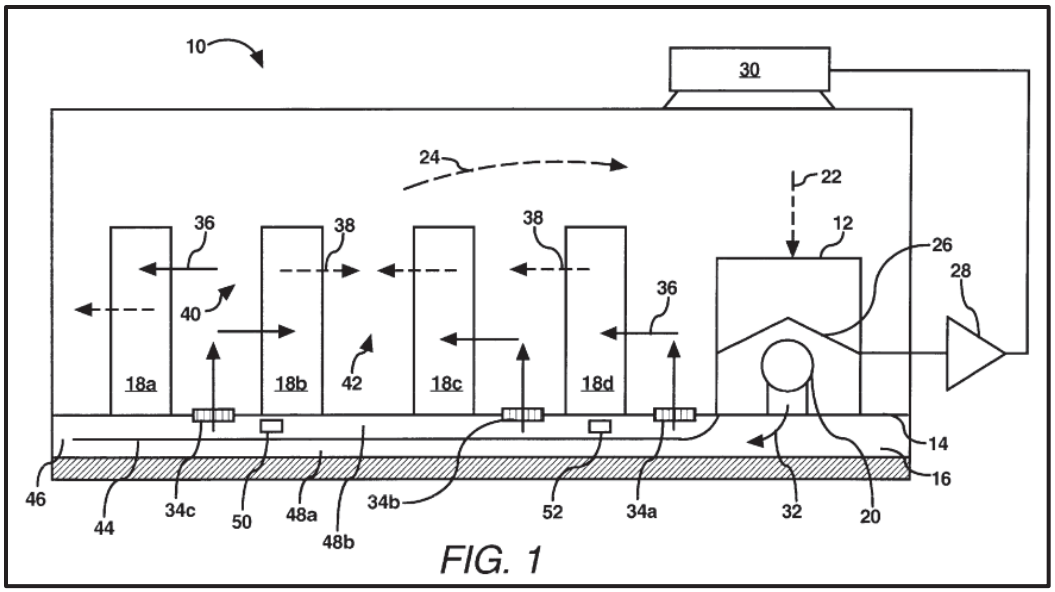

FIG. 1

Ex. 1006, FIG. 1.

360. Racks **18a**, **18b** and associated vent **34c** are downstream of racks **18c**, **18d** and associated vent **34b**, **34a** relative to the location of the cooling air source. It follows directly from Patel's teachings that the controller is operable to increase cooling air flow through vent **34c** in response to a high temperature condition sensed at relatively downstream racks **18a** and/or **18b**, and to decrease cooling air flow through vents **34a** and/or **34b** in response to a low temperature condition sensed at relatively upstream racks **18c** and/or **18d**.

361. Claim 14 of the '179 patent is therefore anticipated by Patel.

Docusign Envelope ID: F2AC5118-C68A-4644-ABD5-897CFD6B4554

13. Claim 15 – "The method according to claim 10, further comprising: implementing said numerical modeling to correlate at least two of temperature, velocity and pressure of said cooling fluid and power draw of at least one of said zone and said racks within said data center to thereby infer a thermal condition throughout said data center, wherein said manipulating step further comprises manipulating said cooling device in response to said inferred thermal condition."

362. Claim 15 recites, "*[t]he method according to claim 10, further comprising: implementing said numerical modeling to correlate at least two of temperature, velocity and pressure of said cooling fluid and power draw of at least one of said zone and said racks within said data center to thereby infer a thermal condition throughout said data center, wherein said manipulating step further comprises manipulating said cooling device in response to said inferred thermal condition*." In my opinion, Patel discloses this claim.

363. As explained above, Patel discloses the method of claim 10.

364. Bash teaches that "[a] correlation of one or more of the following properties: velocity of the cooling fluid flowing through various sections of the data center, distribution of temperature and pressure of the cooling fluid in the data center, and the power draw into the racks, may be created based on the numerical modeling. The correlation may be used to infer thermal conditions throughout the data center when only a minimum number of sensors are available during operation of the cooling system." Ex. 1006, 14:40–48. Patel also teaches that the numerical

Docusign Envelope ID: F2AC5118-C68A-4644-ABD5-897CFD6B4554

model may be incorporated into the control logic to determine whether the cooling system intake should be adjusted. Ex. 1006, 14:52–56.

365. Patel's claim 22 also describes the step of "implementing said numerical modeling to correlate at least two of temperature, velocity and pressure of said cooling fluid and power draw of said racks within said data center to thereby infer a thermal condition throughout said data center, wherein said manipulating step further comprises manipulating said cooling system in response to said inferred thermal condition." Ex. 1006, 18:10–18.

366. Claim 15 of the '179 patent is therefore anticipated by Patel.

C. GROUND 3: CLAIMS 1–6 and 11–13 ARE OBVIOUS OVER BISHOP IN VIEW OF FEENEY AND KOCHAVI

367. For the reasons set forth below, it is my opinion that claims 1–6 and 11–13 of the '179 patent are rendered obvious by Bishop in view of Feeney and Kochavi.

368. In particular, as discussed in Section V.A. above, I have concluded that the plain meaning of the term "partition" as recited in the claims and used throughout the '179 patent refers to "a barrier or wall that subdivides a space." The only structures identified in the '179 patent as being "partitions" are the vertical barriers **22a–22j** beneath the raised floor platform that subdivide the pressurized enclosure into zones. Ex. 1001, FIG. 1; 4:13–16. Some barriers are controllable by

Vertiv Ex. 1002
Vertiv v. Valtrus

Docusign Envelope ID: F2AC5118-C68A-4644-ABD5-897CFD6B4554

a motorized mechanism, such as controllable partition 26f, which also divides the space into zones (i.e., zones **20g** and **20h)**. Ex. 1001, FIG. 5, 16:9–10; 16:21–23.

369. If independent claim 1 is interpreted such that the controllable partitions are barriers that subdivide the plenum space, it is my opinion that a POSITA familiar with Bishop's teachings and Feeney's teachings would have been motivated to modify a preferred embodiment of Bishop by providing cooling air flow control dampers in the form of barriers that subdivide the space beneath Bishop's raised floor platform.

370. It would have been obvious to a skilled artisan to modify the system and methods of Bishop based on Feeney in view of their collective teachings, and based on a POSITA's knowledge of the art. Bishop and Feeney are closely analogous references directed to cooling of data center environments. Both references were directed to solving a similar problem – i.e., to provide cooling air for varying heat loads generated by computer equipment to maintain the temperature distribution throughout the environment within an acceptable range. Both offer a similar solution. They each describe a cooling system that distributes cooling air from a central source through a plenum beneath a raised floor platform. They each involve directing the cooling air to exit through specialized floor tiles near the heat-generating computer equipment positioned on the floor. Feeney directs the air flow by selectively opening or closing openings in vertically oriented side panels of

Docusign Envelope ID: F2AC5118-C68A-4644-ABD5-897CFD6B4554

individual modules within the plenum space, and by providing vents in certain floor tiles though which the cooling air exits into the desired zones. Bishop accomplishes this through a similar approach of specialized floor tiles through which cooling air can exit through controllable air flow dampers and then flow through a computer cabinet.

371. Bishop does not expressly describe dampers or cooling air flow control devices that subdivide the space beneath its raised floor platform into zones. However, the closely related systems and methods disclosed in both references confirm that a POSITA would look to modify Bishop based on Feeney, or combine the interrelated teachings of the two references to arrive at the claimed invention. The similarities between the two references would have suggested to a POSITA following the ordinary process design to combine their teachings. It further confirms that it would have been obvious for a POSITA to try to combine the teachings, choosing from a finite number of predictable solutions, and to modify the controllable damper mechanism described in Bishop so that it forms a controllable barrier that subdivides the under-floor plenum space into zones, in addition to allowing for controlling cooling air flow to desired zones, and with a reasonable expectation of success.

372. A POSITA would understand that there are a limited number of ways to direct cooling air flow beneath a pressurized raised floor platform and cause the

Docusign Envelope ID: F2AC5118-C68A-4644-ABD5-897CFD6B4554

cooling air to exit through the floor and into the above-floor environment at locations where cooling is needed. Bishop's approach of providing a vertically oriented supply conduit and associated controllable damper for directing cooling airflow upwards to exit through select floor tiles represents one known way to accomplish this. Bishop's disclosed system automatically adjusts the damper position in response to air temperatures sensed near the equipment to optimize the cooling fluid distribution. However, continually adjusting the amount of cooling air flowing through individual controllable dampers can cause the plenum air pressure to vary appreciably and create undesirable pressure imbalances. Bishop specifically acknowledges that disparate pressures in the space beneath the platform can cause operational challenges and should be avoided. Ex. 1008, [0088].

373. The '179 patent recognizes the benefits of subdividing the plenum of a pressurized raised floor enclosure into zones and controlling the flow of cooling air from one zone to another in order to better control the amount of cooling air delivered to the racks based on their respective heat loads. Ex. 1001, 4:11–31. It further shows the flexibility of such a system when operating multiple cooling devices to provide cooling air to a large number of racks, such as the four cooling systems 12a–12d for cooling sixteen racks illustrated in Figure 1. Ex. 1001, FIG. 1, 3:41–56. However, a POSITA would have already appreciated these benefits from the teachings of Feeney, which similarly provide a subdivided pressurized plenum

Docusign Envelope ID: F2AC5118-C68A-4644-ABD5-897CFD6B4554

space to distribute cooling air output from multiple cooling devices (i.e. chilled water coils equipped with air blower fans) and teaches a POSITA to use adjustable vertical barriers to create subzones and flow paths within the plenum for directing sufficient cooling air to particular data center zones. Ex. 1013, 5:47–6:10.

374. It would have been obvious from a POSITA's knowledge of the art to look to another analogous reference such as Feeney in the same field that specifically teaches a plenum space subdivided by barriers that are adjustable to properly balance the supply of cooling fluid from multiple sources to multiple destinations within the data center.

375. In my opinion and based on my knowledge and experience, modifying Bishop's system to include subdividing barriers in the plenum space that are controllable to adjust air flow to different areas of the data center would have been exceedingly straightforward using the existing features of Bishop's system and the capabilities of a POSITA. Bishop includes vertically-oriented beams 76 supporting the raised floor support assembly 74. Ex. 1008, FIG. 5. It would have been straightforward for a POSITA to insert panels spanning adjacent beams and mechanically connect them to the beams to subdivide the plenum space into zones. A POSITA would have also been able to readily integrate Bishop's controllable dampers into such vertically-oriented panels. Cooling air supplied through a damper

Docusign Envelope ID: F2AC5118-C68A-4644-ABD5-897CFD6B4554

into a zone would then flow upward through one or more of the existing openings in floor tile(s) of the zone.

376. The ’179 patent recognizes that cooling fluid flow through a vertically-oriented, subdividing partition can be regulated by varying the size of an opening in the partition (Ex. 1001, 5:5:3–8), which is the same basic function of Bishop’s controllable dampers. Furthermore, this approach would have predictably resulted in a greater ability to direct cooling air flow within the plenum space while maintaining stable pressure equilibrium. It would also have provided a more flexible and customizable system by permitting the data center heat loads to be managed in sub-zones, including through the use of multiple cooling devices, each device responsible for supplying cooling air to one or more particular zones. Furthermore, this approach would have predictably resulted in more consistent and reliable control of cooling air flow to locations where it is needed as well as more efficient operation of the entire cooling system.

377. Thus, in my opinion, ample motivation existed for a POSITA to make the above modifications to Bishop’s system and methodology based on Feeney’s teachings in order to arrive at the methods of the Bishop/Feeney Combination (the modifications and combinations discussed regarding Bishop and Feeney shall be referred to herein as the “Bishop/Feeney Combination”). I further explain in the following discussion my reasons for concluding that if interpreted to require the

Docusign Envelope ID: F2AC5118-C68A-4644-ABD5-897CFD6B4554

"controllable partition" to be a controllable wall or barrier that subdivides a space (i.e., the plenum space), the Bishop/Feeney Combination renders obvious claim 1.

378. In the below discussion, I also provide and explain my opinions that dependent claims 2 and 4 also would have been obvious based on the Bishop/Feeney Combination and, that claims 3, 5, 6, and 11–13 would have been obvious further in view of Kochavi.

379. I should also note that under Patent Owner's apparent construction of "partition" to include any device that can control gas or liquid flow, which is broader than Petitioner's construction of that term, these claims would also have been obvious based on the combinations of references discussed below.

1. Claim 1

380. As explained below, Bishop discloses all limitations of independent claim 1 under Patent Owner's broad construction and discloses most limitations under a narrower construction requiring "partition" to be a wall or barrier that subdivides a space. The Bishop/Feeney Combination discloses all limitations under either construction and renders claim 1 invalid for obviousness.

a. 1[pre] – "A method of cooling a plurality of racks in a data center, said method comprising:"

381. The preamble of claim 1 recites, "*[a] method of cooling a plurality of racks in a data center, said method comprising*."

Docusign Envelope ID: F2AC5118-C68A-4644-ABD5-897CFD6B4554

382. I have been informed that claim preambles are generally not limiting. In any case, I believe that the Bishop/Feeney Combination discloses this recitation.

383. Bishop is directed to "cooling at least one electronic module inside a module cabinet." Ex. 1008, [0043]. Bishop further discloses that each cabinet "is typically constructed about each rack" (Ex. 1008, [0007]), with each rack including "computer servers and other electronic modules" (Ex. 1008, [0005]). Thus, Bishop is directed to cooling electronic module cabinets that enclose racks.

384. Bishop also discloses a plurality of electronic module cabinet assemblies **14a–n** arranged in a spaced format within a critical environment room **10**, as shown in Figure 1, reproduced below. Ex. 1008, [0062]. An air source **18** is located inside the critical environment **10** and provides cooling air to the environment. Ex. 1008, [0062]. Since the critical environment room **10** houses a number of racks, a POSITA would understand that the critical environment room **10** is synonymous with a data center.

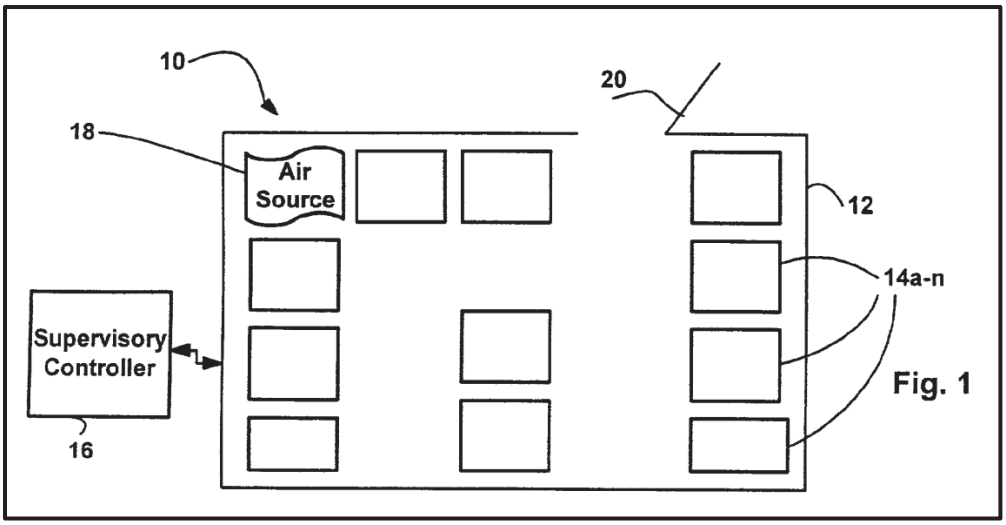

Vertiv Ex. 1002
Vertiv v. Valtrus

Docusign Envelope ID: F2AC5118-C68A-4644-ABD5-897CFD6B4554

Ex. 1008, FIG. 1.

385. Thus, Bishop discloses limitation 1[pre].

386. Feeney is also directed to cooling rack mounted computer equipment within a data center. Ex. 1013, 1:17–36, 2:27–31.

b. 1[a] – "activating a cooling device and opening a controllable partition configured to vary a supply of cooling fluid within a zone of said data center, said zone including at least one associated rack of said plurality of racks;"

387. Claim 1 further recites "*activating a cooling device and opening a controllable partition configured to vary a supply of cooling fluid within a zone of said data center, said zone including at least one associated rack of said plurality of racks.*"

388. Bishop provides further details regarding an exemplary cabinet assembly **14a** shown in Figure 1, which was discussed with respect to limitation 1[pre]. As shown in Figure 5, provided and annotated below, Bishop discloses that the "cabinet assembly **14a** includes . . . five electronic modules **26**, **28**, **30**, **32** and **34**" (annotated in pink). Ex. 1008, [0067].

Vertiv Ex. 1002
Vertiv v. Valtrus

Docusign Envelope ID: F2AC5118-C68A-4644-ABD5-897CFD6B4554

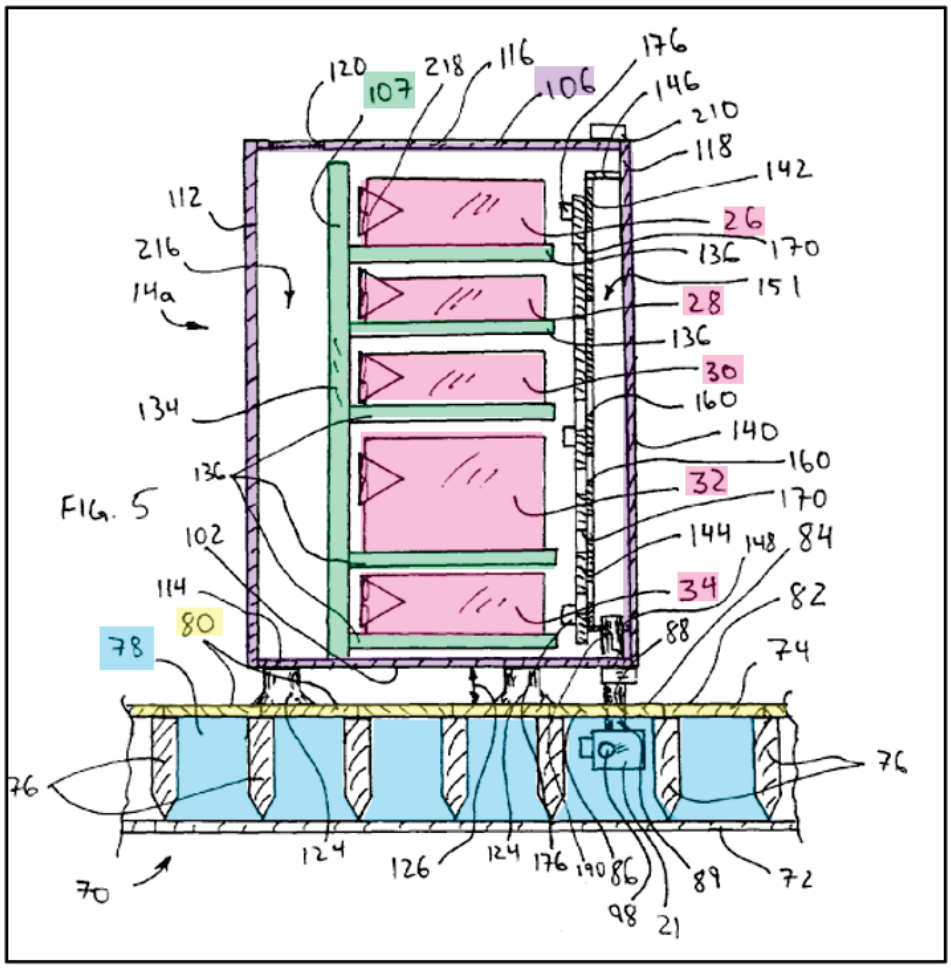

Ex. 1008, FIG. 5 (annotated).

389. Still referring to Figure 5 of Bishop, "[t]he cooling air source **18** provides cool air within space **78**" below the support tiles **80** that serve as a floor on which the cabinet assembly **14a** sits. Ex. 1008, [0063]. "Some of the tiles are . . . special control tiles (e.g., **84**)" that "facilitate delivery of cool air from space **78** directly into cabinet assemblies (e.g., **14a**) thereabove." Ex. 1008, [0064]. The "control tile **84** also includes a cooling controller unit **21**" that "includes a damper and a processor (not separately illustrated)." Ex. 1008, [0065].

Docusign Envelope ID: F2AC5118-C68A-4644-ABD5-897CFD6B4554

390. Thus, Bishop discloses activating a cooling device (i.e. cooling air source **18**) in order to provide cool air to the cabinet assemblies.

391. Bishop teaches pulling "cool air . . . through each entire electronic module and over heat generating components therein" to cool cabinet assemblies. Ex. 1008, [0080]; *see also* Ex. 1008, [0088]. The '179 patent teaches that air is a permissible cooling fluid. Thus, Bishop discloses the cooling fluid recited in claim 1.

392. With regard to the "controllable partition" in limitation 1[a], Bishop discloses controlling the damper of each cooling controller unit **21** to vary the supply of cooling fluid within zones of a data center containing computer racks (i.e. cabinet assemblies). Bishop's system is operable to vary a supply of cooling fluid to the cabinet assemblies supported above special control tiles (such as tile **84)** that include a cooling controller unit **21**. Ex. 1008, [0064]–[0065]. Thus, Bishop discloses opening a controllable partition (i.e., damper) configured to vary a supply of cooling fluid within a zone of said data center containing a cabinet or rack.

393. As shown in Figure 11, the cooling controller **21** may "decrease[] the damper opening to reduce cooling air flow to the corresponding cabinet" at block **308** and may "increase[] the damper opening to increase cooling air flow to the corresponding cabinet" at block **306**. Ex. 1008, [0084]–[0085].

Docusign Envelope ID: F2AC5118-C68A-4644-ABD5-897CFD6B4554

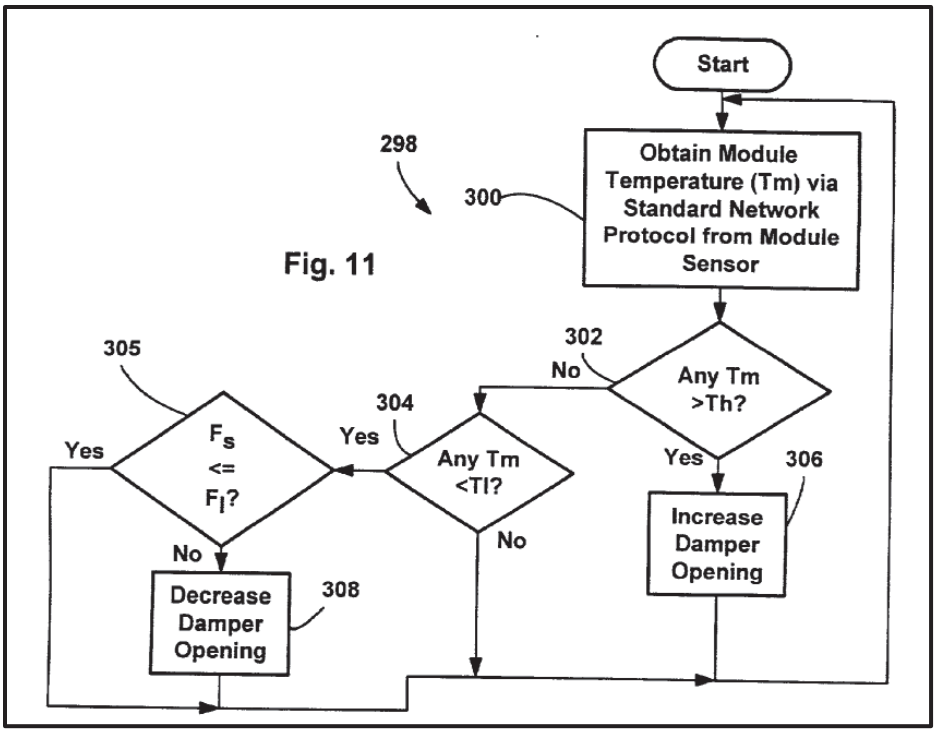

Ex. 1008, FIG. 11.

394. Bishop teaches that the damper is a part of the cooling controller unit **21**. Ex. 1008, [0065]. As shown in Figure 5 above, the cooling controller unit **21**, and therefore its damper, is positioned between the under-floor space **78** and the cabinet assemblies (e.g., **14a**) above the floor. Ex. 1008, [0064]–[0065].

395. However, Bishop does not expressly describe dampers that are associated with barriers that subdivide the space **78** below the raised floor **74**. To the extent that limitation 1[a] is interpreted to require a controllable wall or barrier that subdivides the plenum space, this would have been obvious to a POSITA based on the combined teachings of Bishop and Feeney and a POSITA's knowledge of conventional technologies, tools, and practices.

Docusign Envelope ID: F2AC5118-C68A-4644-ABD5-897CFD6B4554

396. As discussed above, Feeney describes a subdivided pressurized plenum space to distribute cooling air from multiple cooling devices. Feeney teaches that the user can define the paths for cooling air flow under the raised floor and through vented floor tiles by selective closure of air transfer openings in vertically oriented walls that subdivide the plenum space. Ex. 1013, 10:20–22. Feeney encourages the practice of reconfiguring the air flow paths "depending upon changing processing requirements and/or changes in the geometry of the floor region available for the data center function" as being advantageous. Ex. 1013, 11:48–52. Feeney teaches numerous exemplary arrangements of blocking panels to prevent or permit flow through the vertical subdividing walls so as to define airflow paths for targeting the supply of cooling air to the data center zones.

397. It would have been obvious to a POSITA familiar with Bishop's system and Feeney's additional teachings to modify Bishop to provide controllable dampers within barriers that subdivide plenum space 78 into sections or zones. A POSITA would have recognized that breaking up the plenum space into smaller regions would help avoid undesirable pressure imbalances, a concern that Bishop specifically acknowledges. Ex. 1008, [0088]. A POSITA would further appreciate that this would provide other similar benefits to those stated in the '179 patent, such as assuring that sufficient cooling air is distributed from one zone to another in order to better control the amount of cooling air delivered to the racks in each zone. Ex.

Docusign Envelope ID: F2AC5118-C68A-4644-ABD5-897CFD6B4554

1001, 4:11–31. The additional benefits in terms of flexibility to adjust the system to accommodate operating multiple cooling systems to provide cooling air to a large number of racks, is also suggested by Feeney. The system of Feeney has a subdivided pressurized plenum space to distribute cooling air from multiple cooling devices along optimized plenum flow paths using partitions to properly balance the supply of cooling fluid between cooling devices and heat loads.

398. Modifying Bishop's system to include subdividing barriers in the plenum space would improve both Bishop's and Feeney's systems because the vertical barriers would be controllable in response to changing temperature conditions. Bishop is already equipped with controller 21 and a control logic for automatically manipulating airflow dampers based on sensed temperature conditions associated with the computer racks. The modifications would require only routine implementation of mechanical components to add subdividing barriers having associated dampers and connect them to controllers 21. The damper positions would then be automatically adjustable to vary cooling flow rates based on sensed temperature conditions.

399. For these reasons and the additional reasons provided above, it would have been obvious to implement Bishop's air flow control dampers as controllable partitions that subdivide the plenum space so as to provide greater control over the distribution of cooling air within the plenum space, while maintaining stable

Docusign Envelope ID: F2AC5118-C68A-4644-ABD5-897CFD6B4554

pressure conditions regardless of the number of cooling devices deployed, the size of the data center, or the number of computer racks in the data center.

400. Therefore, even under a more restrictive construction of "partition," the Bishop/Feeney Combination discloses activating a cooling device and opening a controllable partition configured to vary a supply of cooling fluid within a zone of a data center that includes at least one computer rack, as recited in limitation 1[a].

401. Because Bishop's disclosed damper is configurable to control the supply of cooling air to a particular region of a data center, the Bishop/Feeney Combination also discloses this limitation under the Patent Owner's broader construction of "partition."

c. 1[b] – "sensing the temperature of said at least one associated rack;"

402. Claim 1 recites "*sensing the temperature of said at least one associated rack.*"

403. Bishop discloses the "cabinet assembly **14a** includes a housing **106**, a shelving unit **107**, five electronic modules **26**, **28**, **30**, **32** and **34**, an internal temperature sensor **73** and an external temperature sensor **77**." Ex. 1008, [0067]. Since each "cabinet is typically constructed about each rack," the cabinet assembly's **14a** internal temperature sensor **73** senses the temperature of a rack. Ex. 1008, [0007].

Docusign Envelope ID: F2AC5118-C68A-4644-ABD5-897CFD6B4554

404. Additionally, and as shown in Figure 2, reproduced below, Bishop discloses "temperature sensors in [or on the electronic]modules **26**, **28**, **30**, **32** and **34** [] identified by numerals **36**, **38**, **40**, **42** and **44**, respectively." Ex. 1008, [0081]; *see also* Ex. 1008, [0106].

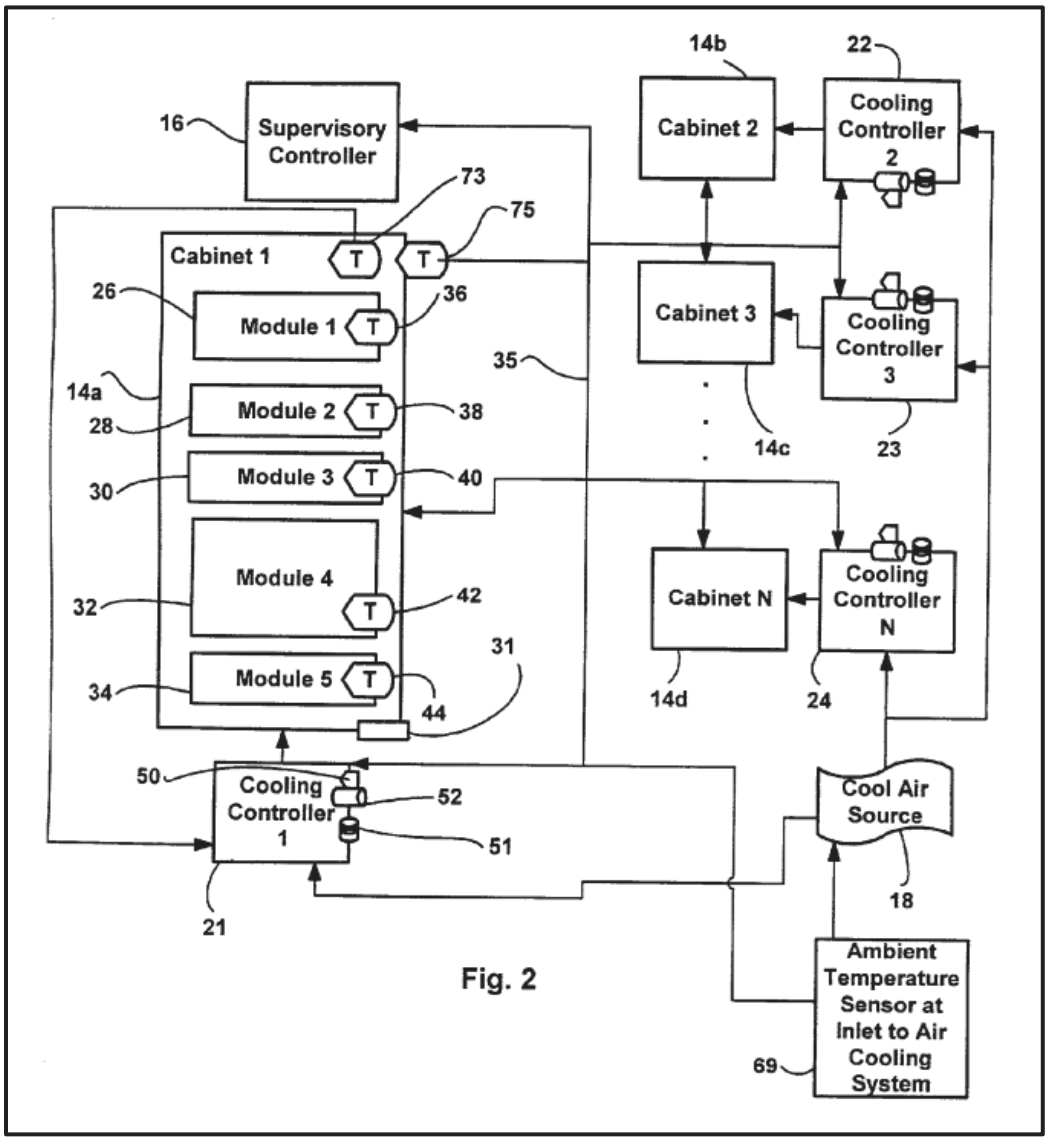

Fig. 2

Ex. 1008, FIG. 2.

405. Bishop discloses sensing temperatures via the temperature sensors of the modules **36**, **38**, **40**, **42** and **44** to provide the "temperature readings from

Docusign Envelope ID: F2AC5118-C68A-4644-ABD5-897CFD6B4554

modules **26**, **28**, **30**, **32** and **34**, [to the] supervising controller **16**" and the cooling controller **21**. Ex. 1008, [0082].

406. Thus, Bishop's disclosure of sensing temperatures of the modules within a rack and other temperatures associated with the racks discloses sensing the temperature of said at least one associated rack, as recited in limitation 1[b].

d. 1[c] – "determining whether said sensed temperature is within a predetermined temperature range; and"

407. Claim 1 recites "*determining whether said sensed temperature is within a predetermined temperature range*."

408. Bishop teaches "compar[ing] each module temperature T_m to a threshold temperature that is at the high end of an acceptable temperature range" (T_h). Ex. 1008, [0083]. "[W]here any module temperature [does not] exceed[] the threshold temperature T_h, control passes to block **304** where supervising controller **16** determines if any temperature is less than a low threshold temperature T_l." Ex. 1008, FIG. 11, [0083]. The temperature sensor **73** inside each cabinet **14a** is also linked to controller **21** and may be assessed against the acceptable temperature range as an alternative to the sensed module temperatures. Ex. 1008, [0105].

409. Thus, the Bishop/Feeney Combination teaches determining whether said sensed temperature is within a predetermined temperature range, as recited in limitation 1[c].

Docusign Envelope ID: F2AC5118-C68A-4644-ABD5-897CFD6B4554

e. 1[d] – "manipulating said controllable partition to vary said supply of said cooling fluid to said zone in response to said sensed temperature being outside said predetermined temperature range."

410. Claim 1 recites "*manipulating said controllable partition to vary said supply of said cooling fluid to said zone in response to said sensed temperature being outside said predetermined temperature range*."

411. Bishop discloses that if the sensed temperature is above the high threshold temperature, the controller increases the damper opening to increase cooling air flow to the corresponding cabinet. Ex. 1008, [0085]. If the sensed temperature is below the low threshold, the controller is operable to decrease the damper opening to reduce cooling air flow to the corresponding cabinet. Ex. 1008, [0084].

412. Thus, the Bishop/Feeney Combination discloses limitation 1[d].

2. Claim 2

413. As I explain below, the Bishop/Feeney Combination renders claim 2 obvious.

a. 2[a] – "The method according to claim 1, further comprising: determining whether the measured temperature of said at least one associated rack is below or equal to a predetermined minimum set point temperature; and"

414. Claim 2 recites "*[t]he method according to claim 1, further comprising: determining whether the measured temperature of said at least one*

Docusign Envelope ID: F2AC5118-C68A-4644-ABD5-897CFD6B4554

associated rack is below or equal to a predetermined minimum set point temperature."

415. As explained above in Section IX.C.1.d, Bishop discloses determining whether sensed temperatures associated with the racks or the modules in the racks are below a minimum threshold temperature.

416. Thus, the Bishop/Feeney Combination discloses limitation 2[a].

b. 2[b] – "decreasing the supply of said cooling fluid to said zone in response to said at least one associated rack having a measured temperature that falls below or equal said predetermined minimum set point temperature."

417. Claim 2 recites "*decreasing the supply of said cooling fluid to said zone in response to said at least one associated rack having a measured temperature that falls below or equal said predetermined minimum set point temperature*."

418. As discussed in relation to claim 1, Bishop discloses that the controller decreases the damper opening to reduce cooling air flow to the corresponding cabinet when the sensed temperature is below a minimum threshold. Ex. 1008, [0084].

419. Thus, the Bishop/Feeney Combination discloses limitation 2[b].

420. Thus, it is my opinion that the Bishop/Feeney Combination discloses each limitation of claim 2 and renders claim 2 unpatentable as obvious.

Docusign Envelope ID: F2AC5118-C68A-4644-ABD5-897CFD6B4554

3. Claim 3

421. As I explain below, Bishop in combination with Feeney and further in view of Kochavi renders obvious claim 3. I discuss each limitation of claim 3 in turn below, and then explain why it would have been obvious to a POSITA to further modify the Bishop/Feeney combination in view of the cooling methods of Kochavi based on their collective teachings and based on a POSITA's knowledge of the art.

a. 3[a] – "The method according to claim 1, further comprising: sensing a pressure of a supply of said cooling fluid;"

422. Claim 3 recites "*[t]he method according to claim 1, further comprising: sensing a pressure of a supply of said cooling fluid*."

423. As explained above, Bishop discloses the method of claim 1.

424. Bishop discloses a pressure sensor sensing the static pressure within space **78** from which the cool air is supplied into cabinet assemblies. Ex. 1008, [0064], [0066]. The space **78** below the cabinet assembly **14a** can be seen in Figure 5 of Bishop, reproduced below.

Vertiv Ex. 1002
Vertiv v. Valtrus

Docusign Envelope ID: F2AC5118-C68A-4644-ABD5-897CFD6B4554

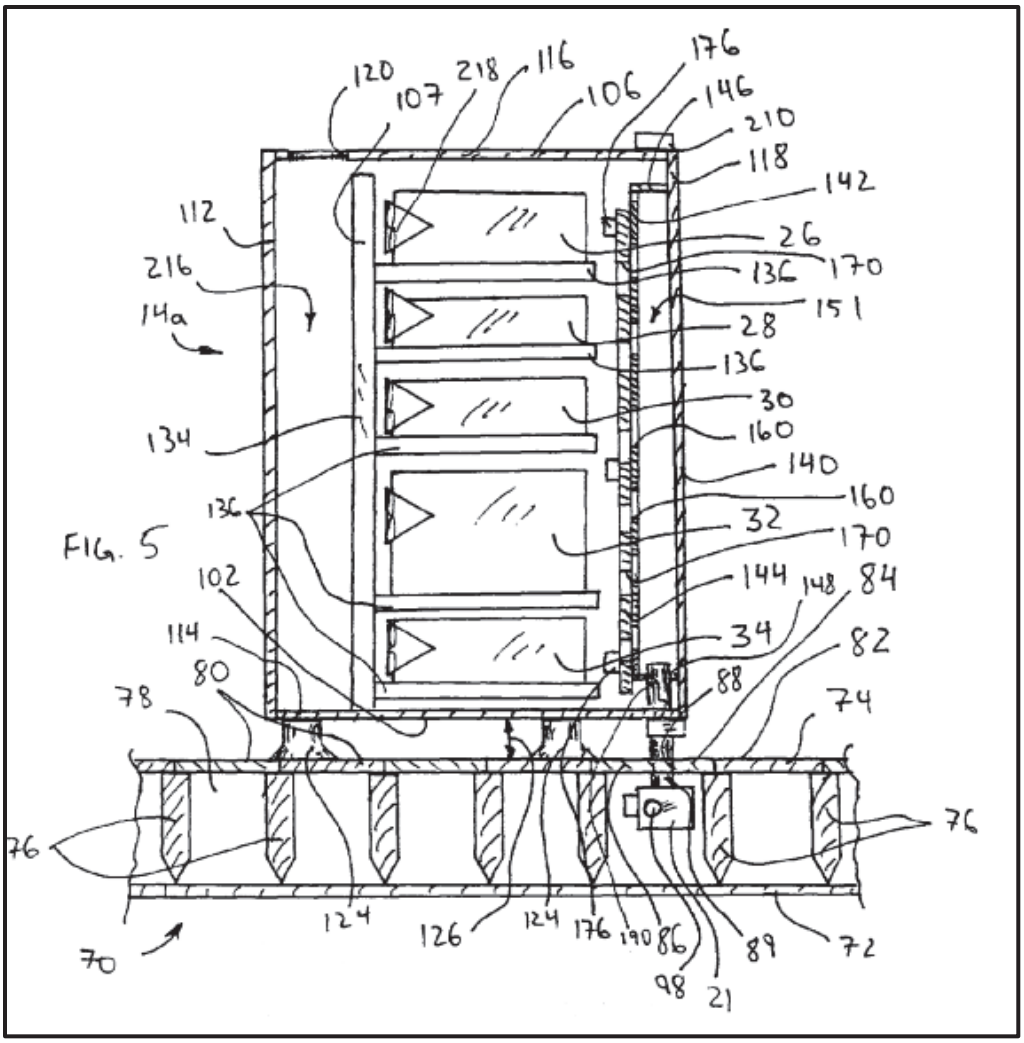

Ex. 1008, FIG. 5.

425. Limitation 3[a] is therefore disclosed by Bishop.

426. As shown in Figure 1 of Kochavi, reproduced with annotations below, "[t]he air conditioning system **10** [] comprises an air flow pressure sensor **110** [(annotated in orange)] which may be located at the entrance to the main duct **44** . . . . The air flow sensor **110** is operative to send a duct pressure signal to the control system **100** which is substantially proportional to the air pressure at the entrance to the main duct **44**." Ex. 1011, 4:58–67.

Docusign Envelope ID: F2AC5118-C68A-4644-ABD5-897CFD6B4554

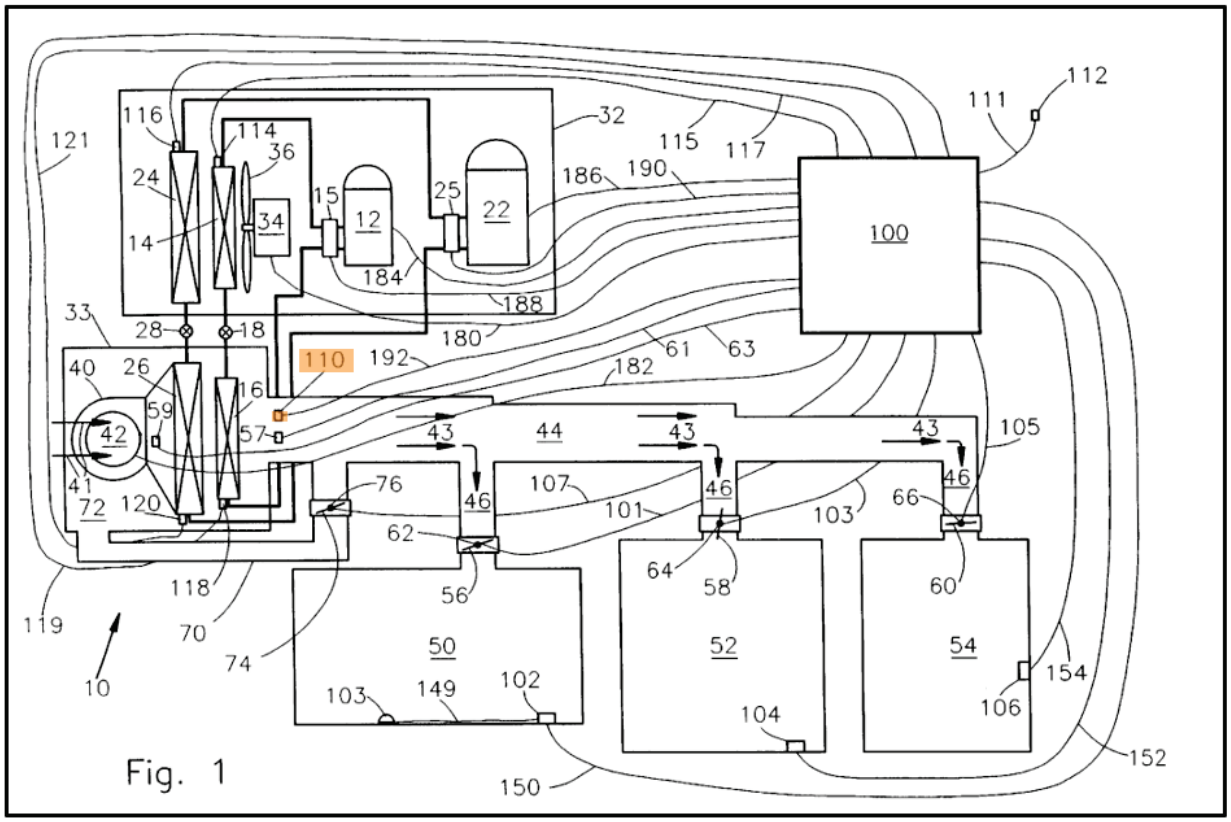

Ex. 1011, FIG. 1 (annotated).

427. Kochavi further discloses that the main duct **44** supplies conditioned air (such as cool air) to a plurality of branch ducts **46** and into a plurality of rooms **50**, **52** and **54**. Ex. 1011, Ex. 1011, 4:42–4:47. Thus, the air flow pressure sensor **110** of Kochavi senses a pressure of a supply of cool air.

428. Therefore, Kochavi also discloses sensing a pressure of a supply of said cooling fluid, as recited in limitation 3[a].

b. 3[b] – "determining whether said sensed pressure is within a predetermined pressure range; and"

429. Claim 3 recites "*determining whether said sensed pressure is within a predetermined pressure range*."

Docusign Envelope ID: F2AC5118-C68A-4644-ABD5-897CFD6B4554

430. Kochavi discloses a bypass damper **74** in the bypass duct **70** that "is operative, in response to signals from the control system **100**, to return some or all of the conditioned air to the entrance region **72** if the pressure sensed by air flow pressure sensor **110** exceeds a value which may be in the region of 16 to 19 psi and is preferably about 17 psi." Ex. 1011, 5:5–12. Thus, Kochavi teaches comparing a sensed pressure to a predetermined pressure range (i.e., 16 to 19 psi).

431. Limitation 3[b] is therefore disclosed by Kochavi.

c. 3[c] – "varying an output of said cooling device in response to said sensed pressure falling outside of said predetermined pressure range."

432. Claim 3 recites "*varying an output of said cooling device in response to said sensed pressure falling outside of said predetermined pressure range*."

433. Bishop does not expressly disclose varying the output of its cooling device in response to sensed pressure being out of range. However, Kochavi discloses this.

434. In particular, Kochavi discloses a bypass damper **74** in the bypass duct **70** that "is operative, in response to signals from the control system **100**, to return some or all of the conditioned air to the entrance region **72** if the pressure sensed by air flow pressure sensor **110** exceeds a value which may be in the region of 16 to 19 psi and is preferably about 17 psi." Ex. 1011, 5:5–12. Kochavi further discloses that depending on the pressure in the main duct **44** sensed by the air flow pressure sensor **110**, the system increases or decreases the fraction opening of the

Docusign Envelope ID: F2AC5118-C68A-4644-ABD5-897CFD6B4554

bypass damper **74** to maintain a substantially constant pressure in the main duct **44**. Ex. 1011, 15:61–65.

435. Figure 1 below shows the position of the bypass damper **74** in the air duct system.

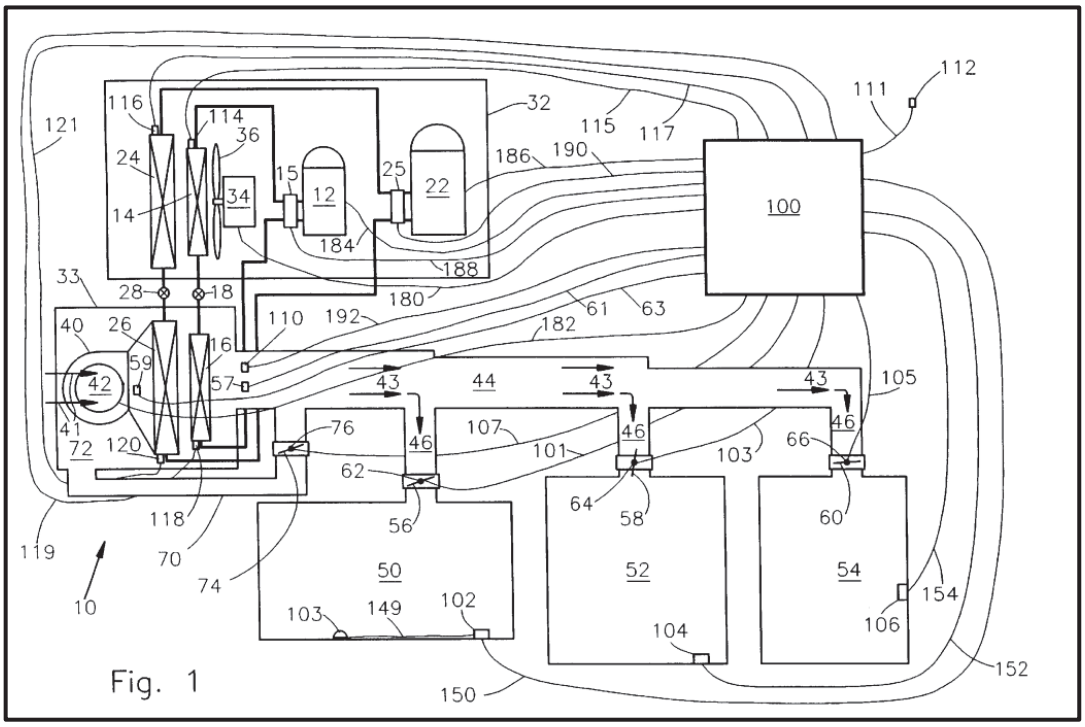

Ex. 1011, FIG. 1.

436. A POSITA reviewing this diagram would understand that decreasing the opening of the bypass damper **74** when the sensed pressure is below the predetermined range leads to more airflow to main duct 44 thereby increasing the pressure of the supply of conditioned air. Conversely, increasing the opening of the bypass damper results in decreasing the airflow and pressure in main duct 44.

437. It would have been obvious to a POSITA, using the system of the Bishop/Feeney Combination, to modify the system to add a capability of adjusting

Docusign Envelope ID: F2AC5118-C68A-4644-ABD5-897CFD6B4554

the cooling device when the pressure of the cooling air supply to the zones is outside of a desired pressure range.

d. A POSITA Would Have Been Motivated to Modify the Bishop/Feeney Combination Based on Kochavi to Arrive at Claim 3 and Would Have Had a Reasonable Expectation of Success

438. It would have been obvious to incorporate Kochavi's supply air pressure regulation feature into the system and method of the Bishop/Feeney Combination.

439. Bishop, Feeney, and Kochavi are closely analogous references that are each directed to the same field of endeavor, namely, meeting the localized air conditioning needs of individual zones (e.g., rooms, cabinets, etc.). Ex. 1008, [0032]; Ex. 1011, 1:54–57; Ex. 1013, 2:37–63. Each of these references offer similar solutions. *See, e.g.*, Sections VIII.C. – VIII.E., herein.

440. The similarities between the references would have suggested to a POSITA following the ordinary design process to combine their teachings. The similarities further confirm that it would have been obvious for a POSITA to try to combine the references (choosing from a finite number of identified, predictable solutions, with a reasonable expectation of success), and substitute the known elements of Kochavi to obtain predictable results.

441. For example, a POSITA would have been motivated to incorporate Kochavi's capability to vary the supply of cooled air when the air pressure falls

Docusign Envelope ID: F2AC5118-C68A-4644-ABD5-897CFD6B4554

outside of a predetermined range because Bishop teaches measuring the pressure of a supply of cool air and providing pressure measurements to a supervising controller **16** (Ex. 1008, [0066]) so that the supervising controller **16** can "diagnose problems such as . . . inefficient pressure generation" (Ex. 1008, [0088]). Bishop cautions that air pressure in raised floor plenums such as Bishop's space 78 "can vary appreciably despite the fact that equilibrium is ideal." Ex. 1008, [0087]. A POSITA desiring to use a system made in accordance with the Bishop/Feeney Combination would have been motivated to solve this problem and would have looked to an analogous reference, such as Kochavi, for a solution.

442. Kochavi teaches varying the cooling device output as needed to return the supply air pressure to the desire range. It would have been a routine matter to modify Bishop's controller to include the capability to vary the cooling air output of the cooling device when the pressure is out of range. Bishop's system already has the capability to sense the supply pressure and provide the sensed values to the controller. Bishop's disclosure allows for use of a variety of conventional cooling devices. A POSITA would have known how to implement a conventional cooling device equipped with a variable speed blower fan. Feeney, for example, discloses cooling devices having associated blower fans. Kochavi offers another easily implementable approach of a bypass damper to adjust the cooling flow output from the cooling device.

Docusign Envelope ID: F2AC5118-C68A-4644-ABD5-897CFD6B4554

443. A POSITA would have had a reasonable expectation of success in implementing a suitable means for varying the supply of cool air in response to pressure fluctuations in the supply plenum. The results—improved pressure control and more stable operations—were both beneficial and predictable. The simple, routine, and low-cost nature of incorporating automatic pressure regulation in the Bishop/Feeney Combination, which would have ensured a reasonable expectation of success, would have further motivated a person of ordinary skill in the art.

444. Claim 3 is therefore rendered obvious by the Bishop/Feeney Combination in view of Kochavi.

4. Claim 4 – "The method according to claim 2, further comprising: increasing the supply of said cooling fluid to said zone in response to said at least one associated rack having a measured temperature that exceed said predetermined minimum set point temperature."

445. Claim 4 recites "*[t]he method according to claim 2, further comprising: increasing the supply of said cooling fluid to said zone in response to said at least one associated rack having a measured temperature that exceed said predetermined minimum set point temperature*."

446. As explained above, Bishop discloses the method of claim 2.

447. As previously discussed, Bishop's system controller increases the damper opening to increase cooling air flow to the corresponding cabinet when the sensed temperature is above the desired range. Ex. 1008, FIG. 11, [0085].

Docusign Envelope ID: F2AC5118-C68A-4644-ABD5-897CFD6B4554

448. Claim 4 of the ’179 patent is therefore rendered obvious by the Bishop/Feeney combination in view of Kochavi.

5. Claim 5 – “The method according to claim 3, wherein said step of varying said cooling device output includes determining whether said measured pressure falls below or equals a predetermined minimum set point pressure.”

449. Claim 5 recites “*[t]he method according to claim 3, wherein said step of varying said cooling device output includes determining whether said measured pressure falls below or equals a predetermined minimum set point pressure*.”

450. Claim 5 depends from claim 3. Kochavi discloses the additional limitation of claim 5.

451. As discussed, Kochavi discloses increasing or decreasing the fraction opening of the bypass damper **74** to maintain a substantially constant pressure in the main duct **44**. Ex. 1011, 15:61–65. Thus, Kochavi’s air supply pressure control necessarily involves determining whether the sensed pressure is within the predetermined pressure range because Kochavi discloses that the bypass damper **74** returns some or all of the conditioned air to the entrance region **72** based on the outcome of that determination. A POSITA would understand that this control strategy includes determining when the sensed pressure is below the predetermined range such that the airflow to main duct 44 should be increased.

452. Claim 5 of the ’179 patent is therefore rendered obvious by the Bishop/Feeney Combination in view of Kochavi.

Docusign Envelope ID: F2AC5118-C68A-4644-ABD5-897CFD6B4554

6. Claim 6 – "The method according to claim 4, further comprising: decreasing an output of said cooling fluid from said cooling device in response to said decrease in cooling fluid supply to said zone exceeding said increase in cooling fluid supply to said zone."

453. Claim 6 recites, "*[t]he method according to claim 4, further comprising: decreasing an output of said cooling fluid from said cooling device in response to said decrease in cooling fluid supply to said zone exceeding said increase in cooling fluid supply to said zone.*"

454. Claim 6 depends directly from claim 4 and indirectly from claim 2. A POSITA would understand that this claim requires decreasing the cooling fluid output from the cooling device if the decrease in cooling fluid to the zone (per claim 2) exceeds the increase in cooling fluid to the zone (per claim 4).

455. The additional step of claim 6 is inherent in Kochavi's automatic pressure regulation methodology. As discussed above, Kochavi's system allows for varying cooling air flow to individual rooms via controllable air dampers, as shown in Figure 1 below.

Vertiv Ex. 1002
Vertiv v. Valtrus

Docusign Envelope ID: F2AC5118-C68A-4644-ABD5-897CFD6B4554

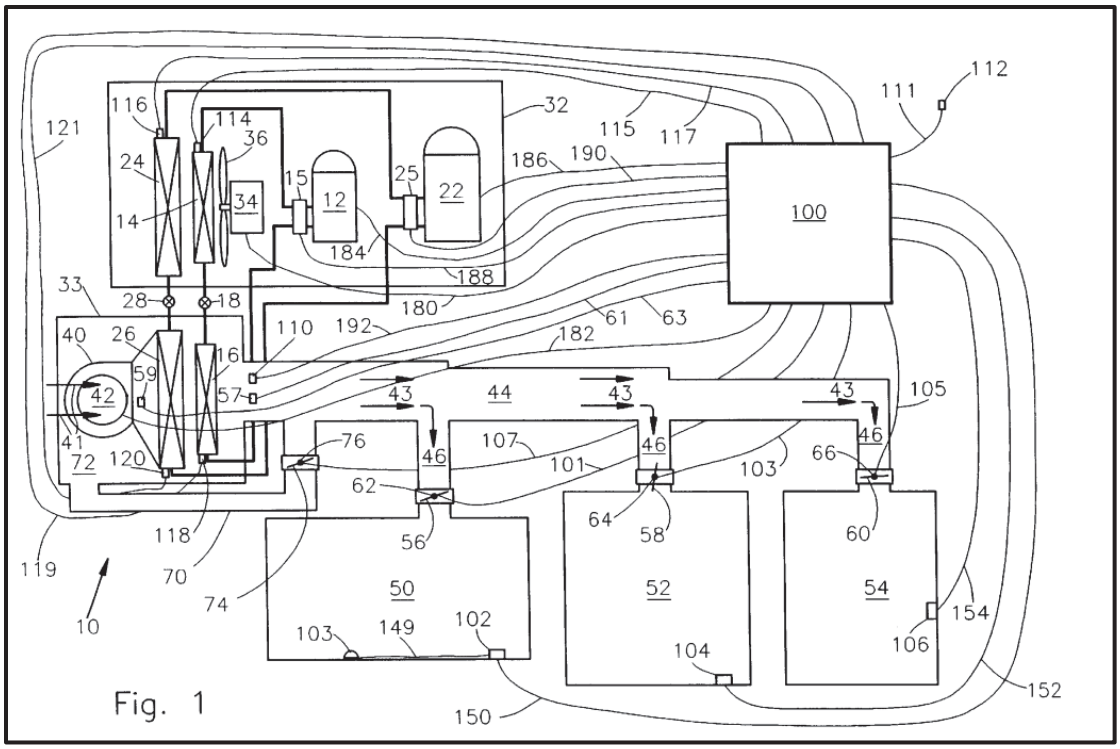

Ex. 1011, FIG. 1.

456. Kochavi's Damper Control Procedure is operable to increase or decrease the fraction open for the dampers in each of the rooms, thereby increasing or decreasing the flow of conditioned air to each of the rooms **50**, **52** and **54**. Ex. 1011, 15:55–60. In the operation state illustrated in Figure 1, the middle damper **64** is fully open, the left damper **62** is partially open, and the right damper **66** is closed. A POSITA would immediately envision other states, such as when the position of the middle damper is being adjusted periodically in response to conditions in room **52** during a time period when the remaining two dampers remained closed. A POSITA understands that in normal operational circumstances, the increases and decreases of cooling air flow to room **52** directly impact the air pressure in the main

Vertiv Ex. 1002
Vertiv v. Valtrus

Docusign Envelope ID: F2AC5118-C68A-4644-ABD5-897CFD6B4554

duct **44**. When the increases in cooling air flow to room **52** exceed decreases for a period of time, the pressure in the duct will drop, and vice versa. Kochavi's pressure control feature, discussed above, results in decreasing the cooling air supplied to the duct in response to a pressure increase in the duct, i.e., when the decreases in cooling air supplied to room **52** exceed increases in the cooling air supplied to that zone during the time period.

457. Therefore, in my opinion, this feature is provided by the same pressure regulation feature of Kochavi discussed above, and the Bishop/Feeney Combination as modified in view of Kochavi discloses claim 6.

458. Claim 6 is therefore rendered obvious by the Bishop/Kochavi combination in view of Kochavi.

7. Claim 11 – "The method according to claim 5, further comprising: increasing the output of said cooling device in response to said measured pressure falling below or equaling said predetermined minimum set point pressure."

459. Claim 11 recites, "*[t]he method according to claim 5, further comprising: increasing the output of said cooling device in response to said measured pressure falling below or equaling said predetermined minimum set point pressure.*"

460. As explained with respect to claim 5, Kochavi teaches comparing a sensed pressure to a predetermined pressure range (i.e. 16 to 19 psi). Kochavi indicates that depending on the pressure in the main duct **44** sensed by the air flow

Docusign Envelope ID: F2AC5118-C68A-4644-ABD5-897CFD6B4554

pressure sensor **110**, Kochavi's system increases or decreases the fraction opening of the bypass damper **74** to maintain a substantially constant pressure in the main duct **44**. Ex. 1011, 15:61–65. Thus, Kochavi's pressure control necessarily involves increasing the cooling fluid output to the main duct 44 when the sensed pressure is below the predetermined pressure range.

461. Claim 11 of the '179 patent is therefore rendered obvious by the Bishop/Feeney Combination in view of Kochavi.

8. Claim 12 – "The method according to claim 5, further comprising: decreasing the output of said cooling device in response to said measured pressure exceeding said predetermined minimum set point pressure."

462. Claim 12 recites, "*[t]he method according to claim 5, further comprising: decreasing the output of said cooling device in response to said measured pressure exceeding said predetermined minimum set point pressure*."

463. Kochavi discloses comparing a sensed pressure to a predetermined pressure range and decreasing the fraction opening of the bypass damper **74** to maintain a substantially constant pressure in the main duct **44**. Ex. 1011, 15:61–65. Thus, Kochavi's pressure control necessarily involves decreasing the cooling fluid output to the main duct 44 when the sensed pressure exceeds the predetermined pressure range.

464. Claim 12 of the '179 patent is therefore rendered obvious by the Bishop/Feeney Combination in view of Kochavi.

Docusign Envelope ID: F2AC5118-C68A-4644-ABD5-897CFD6B4554

9. Claim 13 – "The method according to claim 6, further comprising: increasing an output of said cooling fluid from said cooling device in response to said decrease in cooling fluid supply to said zone falling below said increase in cooling fluid supply to said zone."

465. Claim 13 recites, "*[t]he method according to claim 6, further comprising: increasing an output of said cooling fluid from said cooling device in response to said decrease in cooling fluid supply to said zone falling below said increase in cooling fluid supply to said zone*."

466. This claim is analogous to claim 6, but is directed to the circumstance in which decreases in cooling fluid supplied to a zone are less than increases in cooling fluid supplied to the zone. My analysis above for claim 6 applies here. In that circumstance, Kochavi's pressure control logic would sense a reduction of pressure in main duct **44** and respond by increasing the cooling air supply to the duct. Therefore, the additional step of claim 13 is inherent in Kochavi's disclosure.

467. Claim 13 of the '179 patent is therefore rendered obvious by the Bishop/Feeney Combination in view of Kochavi.

X. CONCLUDING STATEMENTS

468. In my opinion, all limitations in claims 1–15 of the '179 patent were well known and anticipated by the Bash and/or Patel prior art before the filing date of the application that issued as the '179 patent under a broader interpretation of the recited "controllable partition." I have also concluded that under a more confined interpretation of "controllable partition," at least claims 1, 2, and 4 would have been

Docusign Envelope ID: F2AC5118-C68A-4644-ABD5-897CFD6B4554

obvious based on the combination of Bishop and Feeney, and that at least claims 3, 5, 6, and 11–13 would have been obvious, based on Bishop and Feeney and further in view of Kochavi. As such, it is my opinion that claims 1–15 of the ’179 patent should be found unpatentable.

469. I declare that all statements made herein of my own knowledge are true, and that all statements made on information and belief are believed to be true, and that these statements were made with the knowledge that willful false statements and the like so made are punishable by fine or imprisonment, or both, under Section 1001 of Title 18 of the United States Code.

Vertiv Ex. 1002
Vertiv v. Valtrus

Docusign Envelope ID: F2AC5118-C68A-4644-ABD5-897CFD6B4554

Executed on February 26, 2025 in Minneapolis, Minnesota.

DocuSigned by:
JOHN ABRAHAM
7A860E4BA901415...

John P. Abraham, Ph.D.

Vertiv Ex. 1002
Vertiv v. Valtrus

4232 29th Ave.
Minneapolis, MN 55406

John P. Abraham

jpabraham@stthomas.edu
612-963-2169

SUMMARY

Thermal science expert with experience in all aspects of heat transfer and fluid mechanics. Produced approximately 500 publications, books, book chapters, conference presentations, and patents in areas including biological heat transfer and fluid flow, biomedical device design, energy, burn injuries, climate change, fundamental heat transfer and fluid mechanics, and manufacturing processes. Author of approximately 350 popular press articles and has been in approximately 400 radio and television appearances.

ACADEMIC APPOINTMENTS

University of St. Thomas, St Paul, MN

Professor	**2013-Present**
Associate Professor	**2008-2013**
Assistant Professor	**2002-2008**

OTHER EMPLOYMENT

WTS. LLC

Vice President of Research **2023-present**

Responsible for directing solar-electrical-thermal research activities

EDUCATION

University of Minnesota - Twin Cities, Minneapolis, MN

Ph.D., Mechanical Engineering (Thermal Sciences)	**2002**
M.S., Mechanical Engineering, GPA 3.96/4.00	**1999**
B.S., Mechanical Engineering, GPA 4.00/4.00, **Minor**: Mathematics	**1997**

PREVIOUS TEACHING EXPERIENCE

Adjunct Faculty, *University of St. Thomas, St Paul, MN*	**2000-2002**
Graduate Teaching Fellow, *University of Minnesota, Minneapolis, MN*	**2001-2002**
Teaching Assistant, *University of Minnesota, Minneapolis, MN*	**1997-2001**
Tutor, *University of Minnesota, Minneapolis, MN*	**1993-1997**

HONORS/AWARDS

- Advances in Atmospheric Sciences Notable paper award (2024).
- Journal of Forensic Sciences, Noteworthy paper award (2023).
- AAS Esteemed News and Views Paper Prize, (2023)
- Editor's Choice Award, Journal of Forensic Sciences, (2022).
- AAS Esteemed News and Views Paper Prize, (2022)
- Journal of Atmospheric and Oceanic Technology, Editor award (2020)
- National Center for Science Education, Friend of the Planet Award (2016)
- University of St. Thomas, Professor of the Year (2016)
- USA Green Deal of the Year business excellence award (2013)
- Composites Sustainability Award, American Composites Manufacturers Association Award for Composite Excellence, (2013)

4232 29th Ave. **John P. Abraham** jpabraham@stthomas.edu
Minneapolis, MN 55406 612-963-2169

- Nominated, George Mason University, Center for Climate Change Communication, Climate Change Communicator of the Year (2011)
- University of St. Thomas, John Ireland Award (2009)
- University of St. Thomas, Distinguished Educator Award (2008)
- University of St. Thomas, Engineering Professor of the Year (2005)
- Graduate Teaching Fellowship (2001/2002)
- Institute of Technology Teaching Assistant of the Year, awarded by the Institute of Technology Student Board, University of Minnesota (1999/2000)
- Institute of Technology Teaching Assistant of the Year, awarded by the Institute of Technology Student Board, University of Minnesota (2000/2001)
- Institute of Technology Teaching Assistant of the Year, awarded by the Institute of Technology Student Board, University of Minnesota (2001/2002)
- Mechanical Engineering Teaching Assistant of the Year, Mechanical Engineering Department, University of Minnesota (1998/1999)
- Minnesota Professional Engineers Foundation Orion Buan Memorial Scholarship (1996)
- Walter and Margaret Pierce Endowment Fund Scholarship (1996)
- National Space Grant Consortium Scholarship (1996)
- Frank Louk Scholarship (1996)
- Citizens' Scholarship (1992-1995)
- Alfred O. Neir Scholarship (1994)
- Dean's List (1993-1997)

OTHER POSITIONS

Climate Blogger – Guardian Newspaper **2013-2020**
Editorial Board Member – Handling Ethics Cases, Energies **2024-present**

PUBLICATIONS

(26 edited works,4 books, 45 book chapters, 320 journal publications, 149 presentations,26 granted patents, 7 patent applications, 2 granted trademarks)

TOP PUBLICATIONS BY ALTMETRIC

L. Cheng, J.P. Abraham, K.E. Trenberth, T. Boyer, M.E. Mann, J. Zhu, F. Wang, R. Locarnini, J. Fasullo, Y. Li, B. Zhang, L. Wan, X. Chen, D. Wang, L. Feng, X. Song, Y. Liu, F. Reseghetti, S. Simoncelli, V. Gouretski, G. Chen, A. Mishonov, J. Reagan, K. von Schuckmann, Y. Pan, Z. Tan, Y. Zhu, W. Wei, G. Li, Q. Ren, L. Cao, and Y. Lu, New Record Ocean Temperatures and Related Climate Indicators in 2023, *Advances in Atmospheric Sciences,* 2025, doi: 10.1007s00376-024-3378-5. **Altmetric score = 1064, top 1% in all journals, January 2024. This altmetric score places the paper in the top 1% (top 168 out of 205963 papers) in all journals, and within the top 1% of papers in the publishing journal.**

L. Cheng, J.P. Abraham, K.E. Trenberth, J.T. Fasullo, T. Boyer, M.E. Mann, J. Zhu, F. Wang, R. Locarnini, Y. Li, B. Zhang, F. Yu, L. Wan, X. Chen, X. Song, Y. Liu, F. Reseghetti, S. Simoncelli, V. Gouretski, G. Chen, A. Mishonov, J. Reagan, and G. Li, Another Year of Record Heat for the Oceans, *Advances in Atmospheric Sciences*, Vol. 40, pp. 963-974, 2023. **Altmetric score = 1438, top 1% in all journals, January 2023. This altmetric score places the paper in**

4232 29th Ave. **John P. Abraham** jpabraham@stthomas.edu
Minneapolis, MN 55406 612-963-2169

the top 1% (top 100 out of 214000 papers) in all journals, and within the top 1% of papers in the publishing journal.

L. Cheng, J.P. Abraham, K.E. Trenberth, J. Fasullo, T. Boyer, M.E. Mann, J. Zhu, F. Wang, R. Locarnini, Y. Li, B. Zhang, Z. Tan, F. Yu, L. Wan, X. Chen, X. Song, Y. Liu, F. Reseghetti, S. Simoncelli, V. Gouretski, G. Chen, A. Mishonov, J. Reagan, Another Record Ocean Warming Continues Through 2021 Despite La Nina Conditions, *Advances in Atmospheric Sciences,* Vol. 39, 373-385, 2022). **Altmetric score = 4686, top 1% in all journals, January 2022. This altmetric score places the paper in the top 0.02% (top 57 out of 287000 papers) in all journals, and within the top 1% of papers in the publishing journal.**

L. Cheng, J.P. Abraham, K.E. Trenberth, J.T. Fasullo, T.L. Boyer, R. Locarnini, B. Zhang, F. Yu, L. Wan, X. Chen, X. Song, Y. Liu, M.E. Mann, F. Reseghetti, S. Simoncelli, V. Gouretski, G. Chen, and J. Zhu, Upper Ocean Temperatures Hit Record High in 2020, *Advances in Atmospheric Sciences,* Vol. 38, pp. 523-530, 2021. **Altmetric score = 1439, top 1% in all journals, August 2021.**

G. Li, L. Cheng, J. Zhu, K.E. Trenberth, M.E. Mann and J.P. Abraham, Increasing Ocean Stratification Over the Past Half Century, *Nature Climate Change,* Vol. 10, pp. 1116-1123, 2020. **Altmetric score = 726, top 1%, July 2021.**

J.P. Abraham, B. D. Plourde, and L. Cheng, Using Heat to Kill SARS-CoV-2, *Reviews in Medical Virology*, Vol. 30, e2115, 2020. **Altmetric score = 392, top 1%, July, 2021.**

L. Cheng, J.P. Abraham, J. Zhu, K.E. Trenberth, J. Fasullo, T. Boyer, R. Locarnini, B. Zhang, F. Yu, L. Wan, X. Chen, X. Song, Y. Liu, and M.E. Mann, Record-Setting Ocean Warmth Continued in 2019, *Advances in Atmospheric Sciences*, Vol. 37, 1-6, 2020. **This paper was in the top 100 of all published scientific papers in the year 2020, ranked by Altmetric. Also, second of all 2020 papers in the subject area of climate. Altmetric score = 3957, top 1%, January 2021.**

L. Cheng, J. Zhu, J.P. Abraham, K. E. Trenberth, J. T. Fasullo, B. Zhang, F. Yu, L. Wan, Z. Chen, X. Song, 2018 Continues record global warming, *Advances in Atmospheric Sciences*, 36, pp. 249-252, 2019. **Altmetric score = 646, top 1%, January 2021.**

L. Cheng, J.P. Abraham, Z. Hausfather, and K.E. Trenberth, How fast are the oceans warming?, *Science*, Vol. 363, pp. 128-129, 2019. **Altmetric score = 2853, top 1%, January 2021.**

L.J. Cheng, K.E. Trenberth, T. Boyer, J. T. Fasullo, L. Zhu, J.P. Abraham, Improved Estimates of Ocean Heat Content from 1960-2015, *Science Advances*, Vol. 4, paper no. e1601545, 2017. **Altmetric Score = 753, top 1%, January 2021.**

J.P. Abraham, M. Baringer, N.L. Bindoff, T. Boyer, L.J. Cheng, J.A. Church, J.L. Conroy, C.M. Domingues, J.T. Fasullo, J. Gilson, G. Goni, S.A. Good, J. M. Gorman, V. Gouretski, M. Ishii, G.C. Johnson, S. Kizu, J.M. Lyman, A. M. Macdonald, W.J. Minkowycz, S.E. Moffitt, M.D. Palmer, A.R. Piola, F. Reseghetti, K. Schuckmann, K.E. Trenberth, I. Velicogna, and J.K. Willis, A Review of Global Ocean Temperature Observations: Implications for Ocean Heat Content

4232 29th Ave. **John P. Abraham** jpabraham@stthomas.edu
Minneapolis, MN 55406 612-963-2169

Estimates and Climate Change, *Reviews of Geophysics*, Vol. 51, pp 450-483, 2013. **Altmetric score = 178, top 5%, January 2024.**

Editing Activities (28 editorial activities)

1. Editor, Advances in Heat Transfer, Vol. 60, (Forthcoming, 2025).
2. Editor, Advances in Heat Transfer, Vol. 59, (Forthcoming, 2025).
3. Editor, Advances in Heat Transfer, Vol. 58, 2024.
4. Editor, Advances in Heat Transfer, Vol. 57, 2024.
5. Editor, Advances in Numerical Heat Transfer – Artificial Intelligence Methods, (forthcoming 2024)
6. Editor, Special edition in Numerical Heat Transfer B – AI methods in heat transfer (2023)
7. Editor, Advances in Heat Transfer, Vol. 56, 2023.
8. Editor, Advances in Heat Transfer, Vol. 55, 2023.
9. Editor in Chief, Numerical Heat Transfer A (2022-2024).
10. Editor in Chief, Numerical Heat Transfer B (2022-2024).
11. Editor, Advances in Atmospheric Sciences (AAS), 2022.
12. Editor, Advances in Heat Transfer, Vol. 54, 2022.
13. Editor, Advances in Heat Transfer, Vol. 53, 2021.
14. Editor, Advances in Heat Transfer, Vol. 52, 2020.
15. Editor, Advances in Heat Transfer, Vol. 51, 2019.
16. Editor, Advances in Heat Transfer, Vol. 50, 2018.
17. Editor, Advances in Heat Transfer, Vol. 49, 2017.
18. Editor, Advances in Heat Transfer, Vol. 48, 2016.
19. Editor, Advances in Heat Transfer, Vol. 47, 2015.
20. Editor, Advances in Heat Transfer, Vol. 46, 2014.
21. Editor, Advances in Numerical Heat Transfer Vol. 5: Numerical Models of Heat Exchangers, Taylor and Francis, New York, 2017.
22. Editor, Small-Scale Wind Power – Design, Analysis, and Economic Impacts, Momentum Press, 2014.
23. Editor, Advances in Heat Transfer, Vol. 45, 2013.
24. Editor, Advances in Heat Transfer, Vol. 44, 2012.
25. Editor, Advances in Numerical Heat Transfer Vol. 4: Nanoscale Heat Transfer and Fluid Flow, Taylor and Francis, New York, 2012.
26. Guest Editor, Advances in Numerical Heat Transfer Vol. 3: Numerical Implementation of Biological Models and Equations, Taylor and Francis, New York, 2009.
27. Guest Editor, Special Edition of the International Journal of Heat and Mass Transfer: Bioheat and Biofluid Flow, Elsevier, Vol. 51, 23-24, November, 2008.
28. Assistant Editor, Handbook of Numerical Heat Transfer, 2nd Ed. Editors: Sparrow, Minkowycz, and Murthy, John-Wiley & Sons, Inc., New York, 2006.

Editorial Board Member

1. Water Eng. & Sciences, 2023-present
2. Advances in Atmospheric Sciences, 2022-present
3. International Journal of Forensic Sciences, 2023-present

4232 29th Ave. **John P. Abraham** jpabraham@stthomas.edu
Minneapolis, MN 55406 612-963-2169

4. International Society of Cardiovascular Translational Research, 2020-present
5. Energies, Thermal Management, 2019-present
6. Cardiovascular Revascularization Medicine, 2018-present
7. Stem Cell Biology and Transplantation, 2015-present
8. Associate Editor, National Center for Science Education, Climate Science, 2012-present
9. International Journal of Mechanics and Energy, 2012-present
10. Open Mechanical Engineering Journal, 2007-present
11. Open Mechanical Engineering Reviews, 2007-present
12. Open Mechanical Engineering Letters, 2007-present
13. Open Medical Devices Journal, 2008-present
14. Creative Engineering Journal, 2009-present
15. ISRN Applied Mathematics, 2011-present
16. International Journal of Sustainable Energy, 2012 - present
17. International Journal of Materials, Methods, and Technologies, 2012- present

Books

1. K. Vajravelu, J.P. Abraham, S. Mukhopadhyay, and P. Lakshminarayana, Advances in Nanofluid Flow, Heat, and Mass Transfer at Moving/Stretching Surfaces, CRC Press, (in preparation).

2. J.P. Abraham and B.D. Plourde, Small-Scale Wind Power – Design, Analysis, and Environmental Impacts, *Momentum Press*, 2014.

3. J.P. Abraham, P.S. Ellis, M.C. MacCracken, and G.M. Woodwell, Climate controversy 2013. New York, NY: *AuthorHouse*, 2013.

4. J.P. Abraham, E.M. Sparrow, W.J. Minkowycz, R.Ramazani-Rend, and J.C.K. Tong, All Fluid-Flow-Regimes Simulation Model for Internal Flows, *Nova Science Publishers*, Inc., Hauppauge, NY, 2011.

Book Chapters (author of 43 book chapters)

1. F. Salmasi, J.P. Abraham, and B.O. Bakhshayesh, Numerical Study of Stability of Retaining Walls in the Presence of Horizontal and Chimney Drainage, *Engineering Research: Perspective on Recent Advances*, MDPI Publisher, 2025.

2. F. Salmasi and J.P. Abraham, Estimation of Energy Dissipation of Flow Over Stepped Spillways, Energy Research: *Perspectives on Recent Advances*, MPDI Publisher, 2025.

3. K. Vajravelu, J.P. Abraham, S. Mukhopadhyay, and P. Lakshminarayana, Advances in Nanofluid Flow, Heat, and Mass Transfer at a Moving/Stretching Surface, *Advances in Heat Transfer*, Vol. 58, 2024.

4. F. Salmasi and J.P. Abraham, New Perspectives on the Design of Stilling Basins, *Theory and Applications of Engineering Research*, 2024.

4232 29th Ave.
Minneapolis, MN 55406

John P. Abraham

jpabraham@stthomas.edu
612-963-2169

5. F. Salmasi and J.P. Abraham, Exploring Two-Phase Flow Dynamics: Experimental Investigations and Computational Modeling in Smooth and Stepped Chutes, *Theory and Applications of Engineering Research*, 2024.

6. F. Salmasi and J.P. Abraham, Ogee Crest Weir Head-Discharge Relationships, *Research Highlights in Science and Technology,* 2023.

7. F. Salmasi and J.P. Abraham, Hydraulic Performance of Sluice Gates: A Review of Head Loss Estimation and Discharge Coefficients for Optimal Flow Control and Design Considerations, *Dam Engineering – Design, Construction and Sustainability,* IntechOpen, 2023.

8. D.K. Vashwakarma, S. Bhattacharyya, M.L. Soni, and J.P. Abraham, Effect of Inlet Flat Obstruction on Thermohydraulic Characteristics in a Smooth Circular Tube in the Transitional Flow Regime, in Bhattacharya, Verma, Harikrishnan (eds), *Fluid Mechanics and Fluid Power, Vol. 3, Lecture Notes in Mechanical Engineering*, Springer, doi: 10,1007/978-981-19-6270-7_76.

9. F. Salmasi and J.P. Abraham, On the Finite Differences Method Using MS Excel, *Research Highlights in Mathematics and Computer Science* Vol. 6, pp 140-186, 2023.

10. F. Salmasi and J.P. Abraham, Boundary of Transition Flow Regime on Stepped Spillways by Physical Modeling, *Current Overview on Science and Technology Research*, (in press).

11. F. Salmasi and J.P. Abraham, Determination of Stilling Basin Invert Elevation and its Effect on Controlling Hydraulic Jumps, Chapter 5, *Techniques and Innovation in Engineering Research*, Vol. 2, 2022.

12. F. Salmasi and J.P. Abraham. Energy Loss at the Base of a Free Straight Drop Spillway, *Current Overview on Science and Technology Research,* Vol. 6, 2, 2022.

13. F. Salmasi and J.P. Abraham, Computation of Optimal Cross Section of Gravity Dams Using Genetic Algorithms, *Current Overview on Science and Technology Research,* Vol. 6, Chapter 1, 2022.

14. F. Salmasi and J.P. Abraham, Flow Characteristics of Skimming Regime Flow Over Stepped Spillways with Attention to Optimum Step Size, *Current Overview on Science and Technology Research,* Vol. 6, Chapter 3, 2022.

15. R. Daneshfaraz, E. Aminvash, and J.P. Abraham, Hydraulic Characteristics of Fish-Passes on Inclined Drops, *Research Developments in Science and Technology*, Vol. 4, pp. 108-123, 2022.

4232 29th Ave.
Minneapolis, MN 55406

John P. Abraham

jpabraham@stthomas.edu
612-963-2169

16. F. Salmasi, J.P. Abraham, and A. Salmasi, Design Considerations for Pumping Stations Using Variable Speed Pumps, *Novel Perspectives of Engineering Research,* Vol. 10, pp. 98-118, 2022.

17. F. Salmasi, J.P. Abraham, Drainage Gallery in Concrete Gravity Dams and its Effect on Reduction of Uplift Forces, *Novel Perspectives of Engineering Research,* Vol. 10 pp. 43-62, 2022.

18. F. Salmasi, and J.P. Abraham, Numerical Simulation Using the Finite Element Method to Investigate the Effect of Horizontal Drains and Cutoff Walls on Seepage and Uplift Pressure in Heterogeneous Earth Dams, *Novel Perspectives of Engineering Research*, Vol. 9, pp. 58-85, 2022.

19. F. Salmasi, J.P. Abraham, B. Nourani, Determining the Analysis of the Stability of Embankments Against Sliding and Prediction of Sliding and Critical Factor of Safety, *Novel Perspectives of Engineering Research*, pp. 98-125, 2022.

20. F. Salmasi and J.P. Abraham, Effect of Horizontal Drain Length and Cutoff Wall on Seepage and Uplift Pressure in Heterogeneous Earth Dam with Numerical Simulation, *Novel Perspectives of Engineering Research*, Vol. 9, pp. 58-85, 2022.

21. F. Salmasi and J.P. Abraham, Numerical Investigation of Reduction of Uplift Forces by Drain Pipes Under the Bed of a Canal, *Novel Perspectives in Engineering Research*, Vol. 7, pp. 117-139, 2022.

22. F. Salmasi and J.P. Abraham, A Case Study on the Weep Hole and Cutoff Wall Effect for Decreasing Uplift Pressure on Hydraulic Structures, *Innovations in Science and Technology*, Vol. 6, pp. 12-38, 2022.

23. F. Salmasi and J.P. Abraham, Comparison of Uplift Pressure and Hydraulic Gradient in Three Types of Dams: Concrete Gravity dams, Homogeneous, and Heterogeneous Earth-Filled Dams*, Innovations in Science and Technology*, Vol. 3, pp. 71-86, 2022.

24. F. Salmasi and J.P. Abraham, Geological Considerations in Dam Engineering, *Novel Perspectives of Engineering Research*, Vol. 6, pp. 97-125, 2022.

25. B.D. Plourde, J. Kilonzo, J. Kiplagat, J.P Abraham, and L. Cheng, From Sunlight to Drinking Water – The Design and Validation of a Solar-Pasteurization System, Published in *Handbook of Research on Heat Transfer*, edited by S. Bhattacharyya and V. Goel, Chapter 16, 2022.

26. A. Salmasi, J.P. Abraham, and F. Salmasi, Prospects for Application of Nanotechnology in Marine Industries, *Innovations in Science and Technology*, Vol. 4, pp. 84-106, 2022.

27. F. Salmasi and J.P. Abraham, Validity of Schaffernak and Casangrande analytical solutions for Seepage Through a Homogeneous Earth Dam and Comparison with

4232 29th Ave.
Minneapolis, MN 55406
John P. Abraham
jpabraham@stthomas.edu
612-963-2169

Numerical Solutions Based on the Finite Element Method, in *Novel Perspectives of Engineering Research*, Vol. 4, pp. 79-93, 2021.

28. F. Salmasi and J.P. Abraham, Effect of Embankment Soil Layers on Stress-Strain Characteristics, *Recent Progress in Plant and Soil Research*, Vol. 4, pp. 68-84, 2021

29. F. Salmasi and J.P. Abraham, Study on the Effect of Inclination of Cutoff Wall Beneath Gravity Dams on Uplift Force, in *Novel Perspectives of Engineering Research*, Vol. 1, pp. 38-57, 2021.

30. J.P. Abraham, S. Bhattacharya, L. Cheng, and J.M. Gorman, A Brief History of and Introduction to Computational Fluid Dynamics, in *Computational Fluid Dynamics*, edited by: Suvanjan Bhattacharya, published by IntechOpen, 2021.

31. F. Salmasi and J.P. Abraham, The Method of Characteristics Applied to the Sensitivity Analysis for Water Hammer Problems, *New Approaches in Engineering Research*, B.P. International, Vol. 9, pp. 50-63, 2021.

32. J. Gorman, S. Bhattacharya, J.P. Abraham, L. Cheng, Turbulence Models Commonly used in CFD, in: *Computational Fluid Dynamics*, edited by: Suvanjan Bhattacharya, published by IntechOpen, 2021.

33. J.M. Gorman, M. Regnier, and J.P. Abraham, Heat Exchange Between the Human Body and the Environment – A Comprehensive, Multi-Scale Numerical Simulation, in: *Advances in Heat Transfer*, Vol. 52, 2020.

34. L.E. Olsen, J.P. Abraham, L.J. Cheng, J.M. Gorman, E.M. Sparrow, Summary of Forced-Convection Fluid Flow and Heat Transfer for Square Cylinders of Different Aspect Ratios Ranging from the Cube to a Two-Dimensional Cylinder, in: *Advances in Heat Transfer*, Vol. 51, pp. 351-457, 2019.

35. E.M. Sparrow, J.M. Gorman, A. Ghoash, J.P. Abraham, Enhancement of Jet Impingement Heat Transfer by Means of Jet Axis Switching, in: *Advances in Heat Transfer,* Vol. 50, 2018.

36. E.M. Sparrow, J.M. Gorman, J.P. Abraham, W.J. Minkowycz, Validation of Turbulence Models for Numerical Simulation of Fluid Flow and Convective Heat Transfer, in: *Advances in Heat Transfer*, Vol. 49, 397-421, 2017.

37. J.M. Gorman, E.M. Sparrow, J.P. Abraham, W.J. Minkowycz, Heat Exchangers and Their Fan/Blower Partners Modeled as a Single Interacting System by Numerical Simulation, in: *Advances in Numerical Heat Transfer Vol. 5,* Taylor and Francis, New York, 2017.

38. J.P. Abraham, B.D. Plourde, L.J. Vallez, B.B. Nelson-Cheeseman, J.R. Stark, J.M. Gorman, E.M. Sparrow, Skin Burn, in: *Theory and Application of Heat Transfer in Humans*, edited by Devashish Shrivastava, Wiley, June 2018.

4232 29th Ave.
Minneapolis, MN 55406

John P. Abraham

jpabraham@stthomas.edu
612-963-2169

39. M.W. Dewhirst, J.P. Abraham, B.L. Viglianti, Evolution of Thermal Dosimetry for Application of Hyperthermia Treatment to Cancer, in: *Advances in Heat Transfer*, Vol. 47, 397-421, 2015.

40. B.D. Plourde, E.D. Taylor, P.O. Okaka, and J.P. Abraham, Financial and Implementation Considerations for Small-Scale Wind Power, in: *Small-Scale Wind Power – Design, Analysis*, *and Economic Impacts*, Momentum Press, 2014.

41. B.D. Plourde, E.D. Taylor, W.J. Minkowycz, and J.P. Abraham, Introduction to Small-Scale Wind Power, in: *Small-Scale Wind Power – Design, Analysis, and Economic Impacts*, Momentum Press, 2014.

42. J.P. Abraham, E.M. Sparrow, W.J. Minkowycz, R. Ramazani-Rend, and J.C.K. Tong, Modeling Internal Flows by an Extended Menter Transition Model, in: *Turbulence: Theory, Types, and Simulation*, Nova Publishers, New York, 2011.

43. S. Ramadhyani, J.P. Abraham, and E.M. Sparrow, A Mathematical Model to Predict Tissue Temperatures and Necrosis During Microwave Thermal Ablation of the Prostate, in: *Advances in Numerical Heat Transfer Vol. 3: Numerical Implementation of Bioheat Models and Equations*, Taylor and Francis, New York, 2009.

44. J.P. Abraham and E.M. Sparrow, Heat-Transfer and Temperature Results for a Moving Sheet Situated in a Moving Fluid, in: *Heat-Transfer Calculations, 2nd ed.,* editor, Myer Kutz, McGraw-Hill, 2005.

Publications (author of 309 journal papers)

2025

1. B. Nourani, F. Salmasi, and J.P. Abraham, Investigating Seepage and Stability of Unsaturated Embankment Dams Under Transient Conditions, *Transportation Infrastructure Geotechnology*, Vol. 12, pp. 1-27, 2025.

2. P. Karimzadeh, F. Salmasi, B. Nourani, and J.P. Abraham, Utilizing Gene Expression Programming Strategies for Estimating Relative Uplift Pressure Head at Keypoints Beneath Straight Horizontal Aprons, *Journal of Hydraulic Engineering*, (in press), 2025.

3. F. Salmasi and J.P. Abraham, Pore-water Pressure and Seepage Through Earth Dams (Numerical Case Study: Doiraj Dam), *J. of Hydraulic Engineering* (in press), 2025.

4. L. Cheng, J.P. Abraham, K.E. Trenberth, et al., Record High Temperatures in the Ocean in 2024, *Advances in Atmospheric Physics*, (in press), 2025.

5. S. Pourhani, F. Salmasi, B. Nourani, and J.P. Abraham, Investigation of Effect Capillary Fringe in Seepage Characteristics of Only Saturated and Unsaturated-

4232 29th Ave.
Minneapolis, MN 55406
John P. Abraham
jpabraham@stthomas.edu
612-963-2169

Saturated Materials Used in Earthen Dams, *Journal of Hydraulic Engineering,* (in press).

6. P N. Karimzadeh, F. Salmasi, B. Nourani, H. Arvanaghi, and J.P. Abraham, Development of Formulas to Estimate the Uplift Force and Pressure Beneath Aprons with Single Cut-off Walls Including Relative Permeability, *International Journal of Geomechanics*, Vol. 25, article no. 06024026, 2025.

7. B. Bourani, F. Salmasi, and J.P. Abraham, Transportation Infrastructure Geotechnology, Vol. 12, article no. 17, 2025.

8. F. Salmasi and J.P. Abraham, Investigating Seepage and Stability of Embankment Dams in the Unsaturated-Transient State: A Case Study of Doiraj Embankment Dam, *Transportation Infrastructure Geotechnology*, (in press).

9. B. Nourani, F. Salmasi, A. Abbaspour, H. Arvanaghi, and J.P. Abraham, Determination of the Factor of Safety against Sliding of Finite Slopes Using Classical Regression and Soft Computing Approaches, *Iranian Journal of Science and Technology, Transactions on Civil Engineering*, (in press).

10. R. Aminvash, R. Daneshfaraz, V. Sume, S. Sadeghfam, and J.P. Abraham, On the Multiple steady Flow States in Spindle Shaped Geometry of Bridge Foundations, *Journal of Applied Fluid Mechanics*, Vol. 18, pp. 1-15, 2025.

11. B. Nourani, F. Salmasi, A. Abbaspour, H. Arvanaghi, and J.P. Abraham, Determination of the Factor of Safety against Sliding of Finite Slopes Using Classical Regression and Soft Computing Approaches, *Geotechnical and Geological Engineering*, (in press).

2024

12. S. Abbasi, M. Seifollahi, S. Farzaneh, R. Daneshfaraz, V. Sume, N. Sadraei, and J.P. Abraham, Design Optimization of Concrete Gravity Dams Using Grasshopper Optimization Algorithm, *Innovative Infrastructure Solutions*, Vol. 9, article 453, 2024.

13. R. Daneshfaraz, H. Sadeghi, A. Ghaderi, and J.P. Abraham, The Effect of Gabion Steps on the Hydraulic Jump Characteristics Downstream of Stepped Spillways, *Water Science*, Vol. 38, pp. 128-139, 2024.

14. D. Firoozna, M. Vauezi, R. Daneshfaraz, and J.P. Abraham, Numerical Investigation of Leakage in GRP Pipe Joints with Double-Gasketed Coupling Connections under Various Angular Deflections, *ASCE Journal of Pipeline Systems Engineering and Practice*, (accepted).

4232 29th Ave.
Minneapolis, MN 55406

John P. Abraham

jpabraham@stthomas.edu
612-963-2169

15. K. Sini, T. Clair, V Puneeth[1], and J. P Abraham The Thermal Analysis of a Nanofluid Flow Past a Stretching Sheet in the Presence of Radiation, Fluid Dynamics (accepted).

16. Y. Hassanzadeh, H. Anbbaszadeh, A. Abedi, and J.P. Abraham, Numerical Simulation of the Effect of Downstream Material on Scouring-Sediment Profile of Combined Spillway-Gate, Water, *Infrastructure, Ecosystems, and Society* (*AQUA*), Vol. 73, pp. 2322-2343, 2024

17. R. Daneshfaraz, V. Sume, E. Aminvash, M. Rezaie, and J.P. Abraham, Experimental Study of the Effect of Non-Structural Materials on Scouring of Bridge Piers with Removal of River Material: Cationic Polyacrylamide, *Innovative Infrastructure Solutions,* Vol. 9, article no. 486, 2024.

18. M.K. Behbahabi, S.M., Sajjadi, J. Ahadiyan, J.P. Abraham, and H.A. Nadian, Hydraulic Performance of Multiple LOPAC Gates, AQUA – *Water Infrastructure, Ecosystems and Society,* (accepted).

19. F.T. Akyildiz, K. Vajravelu, C. Tunc, and J.P. Abraham. Chebyshev Delta Shaped and Chebyshev Pseudo-Spectral Methods for Solutions of the Poisson and Poisson-Boltzmann Equations, *Mathematics and Computers in Simulation*, (accepted).

20. M. Haghdoost, S.M. Sajjadi, J. Ahadiyan, R. Norouzi, and J.P. Abraham, The Effect of Sheet Piles' Inclination Angle, Number, and Distance on the Seepage Through an Earthfill Dam, *Ain Shams Engineering Journal*, Vol. 15, article no. 103056, 2024.

21. L. Cheng, Y. Pan, Z. Tan, H. Zheng, Y. Zhu, W. Wei, J. Du, H. Yuan, G. Li, H. Ye, V. Gouretski, Y. Li, K.E. Trenberth, J.P. Abraham, Y. Jin, F. Reseghetti, X. Lin, J. Zhu, IAPv4 Ocean Temperature and Ocean Heat Content Gridded Dataset, *Earth System Science Data,* Vol. 16, pp. 3517-3546, 2024.

22. F. Salmasi and J.P. Abraham, Numerical Solution of Rigid Column Theory Governing Equations for Surge Tank Analysis in Hydropower Plants Using a Microsoft Excel Platform, *Journal of Hydraulic Engineering,* (accepted).

23. F. Salmasi and J.P. Abraham, Estimation of Manning's Roughness Coefficient Using Observational Data, *ISH Journal of Hydraulic Engineering*, Vol. 30, pp. 623-632, 2024.

24. F. Salmasi and J.P. Abraham, Effect of Flywheels in Pump Stations for Reducing the Volume of Air Chambers, *Journal of Hydraulic Engineering*, (accepted).

25. S. Bhattacharyya, T. Bhatt, D. K. Vishwakarma, A.C. Benim, and J.P. Abraham, Effect of Mechanical Vibration and its Influence on Thermal Performance of a Nanofluid Heat Exchanger, *Numerical Heat Transfer Part A*, (in press), doi: 10.1080/10407782.2024.2331589.

4232 29th Ave.
Minneapolis, MN 55406

John P. Abraham

jpabraham@stthomas.edu
612-963-2169

26. H. Apaydin, S.N. Mousavi, M.T. Sattari, and J.P. Abraham, Extreme Pressure Coefficients – Modeling a Hydraulic Jump Using Deep-Learning Based Methods, *Sadhana*, Vol. 49, article number 151, 2024.

27. E. Aminvash, F. Kalateh, R. Daneshfaraz, and J.P. Abraham, Investigation of the Performance of Soft-Computing Methods in the Hydraulic Evaluation of the Slot Fishway on the Inclined Drop, *Journal of Hydraulic Structures*, Vol. 10, pp. 46-65, 2024.

28. Abraham, J.P., Cheng, L., and Gorman, J.M., CFD Simulation Models and Diffusion Models for Predicting Carbon Dioxide Plumes Following Tank and Pipeline Ruptures – Laboratory Test and a Real-World Case Study, *Energies*, Vol. 17, paper no. 1079, 2024.

29. R. Daneshfaraz, V. Sume, Mamidzadeh, J.P. Abraham, Experimental Investigation and Application of Soft Computing Models for Predicting Flow Energy Loss in Arch-Shaped Constrictions, *AQUA – Water Infrastructure, Ecosystems, and Society Production System*, Vol. 73, pp. 637-661, 2024.

30. F. Kalateh, E. Aminvash, and J.P. Abraham, On the Effect of Flow Regime and Slope of the Channel Bed on the Hydraulic Performance of the Sharp-Crested Rectangular Side Weir: A Numerical Simulation, *European Journal of Environmental and Civil Engineering*, Vol. 28, pp. 2327-2344, 2025, doi: 10.1080/19648189.2024.2314112.

31. H. Abbeszadeh, R. Daneshfaraz, V. Sume, and J.P. Abraham, Experimental Investigation and Application of Soft Computing Models for Predicting Flow Energy Loss in Arc-Shaped Constrictions, *Water Infrastructure, Ecosystems, and Society*, vol. 23, pp. 637-661, 2024.

32. E. Aminvash, F. Kalateh, R. Daneshfaraz, and J.P. Abraham, The Performance of KNN and SVM Algorithms in Evaluating the Hydraulic Parameters of Inclined Drop with the Presence of Fishways, *Journal of Hydraulic Structures*, (submitted).

33. E. Aminvash, F. Kalateh, R. Daneshfaraz, and J.P. Abraham, The Performance of KNN and SVM Algorithms in Evaluating the Hydraulic Parameters of Inclined Drop with the Presence of Fishways, *Journal of Hydraulic Structures*, Vol. 10, pp. 46-65, 2024.

34. L. Cheng, J.P. Abraham, K.E. Trenberth, T. Boyer, M.E. Mann, J. Zhu, F. Wang, R. Locarnini, J. Fasullo, Y. Li, B. Zhang, L. Wan, X. Chen, D. Wang, L. Feng, X. Song, Y. Liu, F. Reseghetti, S. Simoncelli, V. Gouretski, G. Chen, A. Mishonov, J. Reagan, K. von Schuckmann, Y. Pan, Z. Tan, Y. Zhu, W. Wei, G. Li, Q. Ren, L. Cao, and Y. Lu, New Record Ocean Temperatures and Related Climate Indicators in 2023, *Advances in Atmospheric Sciences,* 2024, doi: 10.1007s00376-024-3378-5.

4232 29th Ave.
Minneapolis, MN 55406
John P. Abraham
jpabraham@stthomas.edu
612-963-2169

35. R. Salmasi, F. Salmasi, and J.P. Abraham, Flood Spreading Effects on Soil Chemical Properties: Case Study in Tasuj Station, Iran, *Water Supply*, Vol. 24, pp. 995-1004, 2024.

36. R. Daneshfaraz, H. Sadeghi, A. Ghaderi, and J.P. Abraham, Characteristics of Hydraulic Jump and Energy Dissipation in the Downstream of Stepped Spillways with Rough Steps, *Flow Measurement and Instrumentation*, Vol. 96, paper no. 102506, 2024.

2023

37. B. Nourani, H. Arvanaghi, F.A. Pourhosseini, M. Javidnia, and J.P. Abraham. Enhanced Support Vector Machine with Particle Swarm Optimization and Genetic Algorithm for Estimating Discharge Coefficients of Circular-Crested Oblique Weirs, Iranian Journal of Science and Technology, *Transactions of Civil Engineering*, Vol. 47, pp. 3185-3198, 2023.

38. V. Sume, R. Daneshfaraz, A. Kerim, H. Abbaszadeh, and J.P. Abraham, Investigation of Clean Energy Production in Drinking Water Networks, *Water Resources Management*, Vol. 38, pp. 2189-2208, 2024.

39. F. Salmasi, P. Sihag, J.P. Abraham, and M. Nouri, Experimental Investigation and Prediction of Free Fall Jet Scouring Using Machine Learning Models, *International Journal of Sediment Research*, Vol. 38, pp. 405-420, 2023.

40. F. Salmasi, J.P. Abraham, and A. Salmasi, Evaluation of Various Design Models of Irrigation Sedimentation Basins, *International Journal of Environmental Science and Technology*, Vol. 20, pp. 11301-11308.

41. H. Abbaszadeh, R. Norouzi, V. Sume, A. Kuriqi, R. Daneshfaraz, J.P. Abraham, and R. Daneshfaraz, Sill Role Effect on the Flow Characteristics (Experimental and Regression Model Analytical), *Fluids*, Vol. 8, paper 235.

42. S. Abbasi, M. Seifollahi, R. Daneshfaraz, F. Mohammadi, and J.P. Abraham, Correction to Estimation of Vertical Settlement of Earthen Dams Caused by Earthquake Using ANN Model and Wavelet-ANN Composition, Geotechnical and Geological Engineering, Vol. 41, pg. 3187, 2023.

43. F. Salmasi, S. Razi, J.P. Abraham, Hydraulics of Flow in Gabion Stepped Spillways, an Experimental Study, *Journal of Hydraulic Structures*, Vol. 9, pp. 75-100, 2023.

44. R. Daneshfaraz, R. Norouzi, J.P. Abraham, P. Ebadzadeh, B. Akhondi, and M. Akbar, Numerical Simulation Using the Finite Volume Method to Investigate the Effect on the Length of Sharp-Crested Triangular Plan Form Weirs on the Hydraulic Parameters, *Water Science Journal*, (accepted).

4232 29th Ave.
Minneapolis, MN 55406

John P. Abraham

jpabraham@stthomas.edu
612-963-2169

45. R. Daneshfaraz, R. Norouzi, J.P. Abraham, P. Ebadzadeh, B. Akhondi, and M. Abar, Determination of the Flow Characteristics Over Sharp-Crested Triangular Plan Form Weirs Using Numerical Simulation, *Water Science*, Vol. 37, pp. 211-224, 2023.

46. R Daneshfaraz, P. Rezaie, E. Aminvash, V. Sume, and J.P. Abraham, On the Effect of Green Non-Structural Materials on Scour Reduction Downstream of Grid Dissipators, *AQUA – Water Infrastructure, Ecosystems and Society*, Vol. 72, pp. 1344-1357, 2023.

47. B. Nourani, F. Salmasi, A. Abbaspour, J. Arvanghi, and J.P. Abraham, Determination of the Factor of Safety Against Slide of Finite Slopes Using Classical Regression and Soft Computing Approaches, *J. of Hydroinformatics* (submitted).

48. R. Daneshfaraz, E. Aminvash, S. Veli, M. Rezair, A. Ghaderi, and J.P. Abraham, Experimental Study of New Green and Non-Structual Materials Effects on Scour Reduction Downstream of a Screen, Water, Infrastructure, Ecosystems, and Society, (accepted).

49. S. Abbasi, M. Seifollahi, R. Daneshfaraz, F. Mohammadi, J.P. Abraham, and H. Abbaszadeh, Estimation of Vertical Settlement of Earthen Dams Caused by Earthquake Using ANN Model and Wavelet-ANN Composition, Geotechnical and Geological Engineering, Vol. 41, pp. 2169-3186, 2023.

50. S. Abbasi, S. Ravaz, M. Heidapour, R. Daneshfaraz, J.P. Abraham, Investigating and Comparing the Performance of Collar and Cable Composition on Scouring of Cylindrical Bridge Piers, *Sadhana Academy Proceedings in Engineering Sciences*, Vol. 48, pp. 149 and following.

51. A. Aghdam, F. Salmasi, A. H. Zadeh Dalia, A. Abbaspoour, and J.P. Abraham, Experimental and Numerical Investigation of the Trajectories of Free and Pressurized Jets Through Storage Dams, *Water Supply*, Vol. 23, paper no. 1297, 2023.

52. Y. Pan L. Cheng. K. von Schuckmann, K.E. Trenberth, G. Li, J.P. Abraham, Y. Liu, V. Gouretski, Y. Yu, H. Liu, C. Liu, Annual Cycle in Upper Ocean Heat Content and the Global Energy Budget, *J. Climate*, Vol. 36, pp. 5003-5026, 2023.

53. M. Haghdoost, E. Lakzian, R. Norouzi, J.P. Abraham, S. Sajjadi, and J. Ahadiyan, Numerical Simulation Using the Finite Element Method to Investigate the Effect of Internal Cutoff Walls on Seepage and Hydraulic Gradients in Homogeneous Earth Dams, Modeling Earth Systems and Environment, (in press), doi: 10.1007/s40808-023-01755-w, 2023.

54. D.K. Vishwakarma, S. Bhattacharya, M.K. Sonja, and J.P. Abraham, Thermal and Flow Analysis of Air in a Uniformly Heated Channel with an Inlet Flap Obstruction in Laminar, Transitional, and Turbulent Flow Regimes, *Heat Transfer Engineering*, in press, doi: 10.1080/01457632.2023.2275235.

4232 29th Ave.
Minneapolis, MN 55406

John P. Abraham

jpabraham@stthomas.edu
612-963-2169

55. F. Salmasi, F. Nahrain, J.P. Abraham, and A.T. Aghdam, Prediction of Discharge Coefficients for Broad-Crested Weirs Using Expert Systems, *Journal of Hydraulic Engineering*, Vol. 29, pp. 1-11, 2023.

56. J.P. Abraham, T. Wei, L. Cheng, Validation of a New Method of Providing Case-Specific Time-of-death Estimates Using Cadaver Temperatures, *Journal of Forensic Science*, Vol. 68, pp. 884-897, 2023.

57. F. Salmasi and J.P. Abraham, Hydraulic Characteristics of Flow Over Stepped and Chute Spillways (Case Study: Zirdan Dam), *Water Supply*, Vol. 23, pp. 851-866, 2023.

58. M. Naghavi, M. Mohammadi, G. Mahtabi, and J.P. Abraham, Experimental Assessment of Velocity and Bed Shear Stress in the Main Channel of a Meandering Compound Channel with One-Sided Blocks in Floodplain, *Journal of Hydrology*, Vol. 617, Part C, paper no. 129073, 2023.

59. T. Wei and J.P. Abraham, Comment on the Marshall-Hoare-Henssge Model for Estimating the Time Since Death, *Journal of Forensic Science*, Vol. 68, pp. 676-681, 2023.

60. R. Daneshfaraz, R. Norouzi, P. Ebadzadeh, S. Di Francesco, J.P. Abraham, Experimental Study of Geometric Shape and Sill of Sill Effects on the Hydraulic Performance of Sluice Gates, *Water*, Vol. 15, paper no. 314, 2023.

61. L. Cheng, J.P. Abraham, K.E. Trenberth, J.T. Fasullo, T. Boyer, M.E. Mann, J. Zhu, F. Wang, R. Locarnini, Y. Li, B. Zhang, F. Yu, L. Wan, X. Chen, X. Song, Y. Liu, F. Reseghetti, S. Simoncelli, V. Gouretski, G. Chen, A. Mishonov, J. Reagan, and G. Li, Another Year of Record Heat for the Oceans, *Advances in Atmospheric Sciences*, Vol. 40, pp. 963-974, 2023.

62. A.T. Aghdam, A. Hosseinzadeh, F. Salmasi, A. Abbaspour, and J.P. Abraham, Numerical and Experimental Study of Trajectory for Free Falling Jets, *Iranian Journal of Science and Technology,* Vol. 47, pp. 2423-2435, 2023.

63. T. Wei, J.P. Abraham, and Y. Wang, New Temperature and Heat Loss Charts for One-Dimensional, Transient Heat Conduction, *Journal of Heat Transfer*, Vol. 145, paper no. 014502, 2023.

2022

64. M. Seifollahi, S. Abbasi, A. Pourtaghi, R. Daneshfaraz, and J.P. Abraham, Performance Efficiency of Data-Based Hybrid Intelligent Approaches to Predict Crest Settlement in Rockfill Dams, *Arabian Journal of Geosciences*, Vol. 15, paper 1701, 2022.

4232 29th Ave.
Minneapolis, MN 55406

John P. Abraham

jpabraham@stthomas.edu
612-963-2169

65. L. Cheng, K. von Schuckmann, J.P. Abraham, K. Trenberth, M. Mann, L. Zanna, M.H. England, J. D. Zika, J. Fasullo, Y. Yu,, Y. Pan, J. Zhu, E. Newsom, B. Bronselaer, and X. Lin, Past and Future Warming, *Nature Reviews Earth and Environment*, Vol. 3, pp. 778-794, 2022 (**Altmetric – 595, May 2023, top 1% of similar papers)**.

66. F. Salmasi, P. Sihag, J.P. Abraham M. Nouri, Experimental Investigation and Prediction of Free Fall Jet Scouring Using Machine Learning Models, *International Journal of Sediment Research*, Vol. 38, pp. 1-20, 2022.

67. R. Daneshfaraz and J.P. Abraham, Laboratory Study of Energy Dissipation on Gabion Vertical Drop, *Innovative Infrastructure Solutions*, Vol. 7, article number 328, 2022.

68. J.P. Abraham and L. Cheng, Intersection of Climate Change, Energy, and Adaptation, *Energies,* Vol. 15, paper no. 5886, 2022.

69. Y. Wang, H. Wan, T. Wei, and J.P. Abraham, Enhancement of Heat and Mass Transfer By Herringbone Microstructures in a Simple Shear Flow, *Physics of Fluids*, Vol. 34, paper no. 082012, 2022.

70. M. Seifollahi, S. Abbasi J.P. Abrahan, R. Norouzim R. Daneshfaraz, M-A. Lotfollahi-Yaghin, and A. Alkan, Optimization of Gravity Concrete Dams Using the Grasshopper Algorithm (Case Study: Koyna Dam), Geotechnical and Geological Engineering, Vol. 40, pp. 5481-5496, 2022.

71. T. Tian, L. Cheng, G. Wang, J.P. Abraham, J. Zhu, J. Song, and H. Leng, Reconstructing High-Resolution Ocean Subsurface Salinity State Using Machine Learning Approach, *Earth System Science Data* (in press).

72. J.P. Abraham, L. Cheng, M.E. Mann, K.E. Trenberth, K. von Schuckmann, The Ocean Response to Climate Change Guides Both Adaptation and Mitigation Efforts, *Atmospheric and Oceanic Science Letters*, Vol. 15, paper no. 100221, 2022.

73. R. Biabani, F. Salmasi, M. Npouri, and J.P. Abraham, Flow Over Embankment Gabion Weirs in Free Flow Conditions, *Journal of Hydro-Environmental Research*, Vol. 44, pp. 65-76, 2022.

74. B. Nourani, F. Salmasi, H. Arvanaghi, and J.P. Abraham, Development of Explicit Formulas for Estimating Seepage Characteristics Underneath Aprons with Equal and Unequal End Vertical Double-Piles, *International Journal of Geomechanics*, Vol. 22, paper no. 04022237, 2022.

75. L. Cheng, G. Foster, Z. Hausfather, K.E. Trenberth, J.P. Abraham, Improved Quantification of the Rate of Ocean Warming, *Journal of Climate*, Vol. 35, pp. 4827-4840, 2022.

4232 29th Ave.
Minneapolis, MN 55406

John P. Abraham

jpabraham@stthomas.edu
612-963-2169

76. F. Salmasi and J.P. Abraham, Effect of Slope on Energy Dissipation for Flow Over a Stepped Spillway, *Water Supply*, Vol. 22, pp. 5056-5069, 2022.

77. Y. Liu, L. Cheng, Y. Pan, Z. Tan, J.P. Abraham, B. Zhang, J. Zhu, and J. Song, How Well do CMIP6 and CMIP5 models simulate the climatological seasonal variations in ocean salinity, *Advances in Atmospheric Sciences*, doi: 10.1007/s00376-022-1381-2.

78. J.M. Gorman, W. Tan, and J.P. Abraham, Numerical Simulation of Microwave Ablation in the Human Liver, Heat Transfer in Biomedical Applications, edited by A. Andreozzi, M. Iasiello, V. Timochenko, and K. Vafai, published in *Processes*, Vol. 10, paper no. 361, 2022.

79. F. Salmasi, S. Shadkani, J.P. Abraham, F. Malekzadeh, Experimental Investigation For Determination of Discharge Coefficients for Inclined Slide Gates and Comparison with Data-Driven Models, *Iranian Journal of Science and Technology, Transactions of Civil Engineering*, Vol. 46, pp. 2495-2509, 2022.

80. F. Salmasi and J.P. Abraham, Multivariate Nonlinear Regression for Predicting Free Falling-Jet Scouring: An Experimental Study, Iranian Journal of Science and Technology, *Transactions of Civil Engineering*, (in press) doi: 10.1007/s40996-022-00817-w.

81. F. Salmasi, J.P. Abraham, A. Salmasi, Evaluation of Variable Speed Pumps in Pressurized Water Distribution Systems, *Applied Water Science*, Vol. 12, article no. 51, 2022.

82. J.P. Abraham, L. Cheng, P.L. Hudson, and A.N. Abraham, Assessing Burn Patterns and Severity Using IR Visualization – A Case Study Approach, *Journal of Forensic Science and Criminology,* Vol. 9, pp. 1-19, 2022.

83. J. P. Abraham, L. Cheng, L. Vallez, and T. Wei, Using Cadaver Temperatures to Estimate Time of Death, A Case-Specific Numerical Approach, *Journal of Forensic Sciences*, Vol. 67, pp. 1049-1059, 2022. (**Awarded JFS Noteworthy article of 2022**).

84. L. Cheng, J.P. Abraham, K.E. Trenberth, J. Fasullo, T. Boyer, M.E. Mann, J. Zhu, F. Wang, R. Locarnini, Y. Li, B. Zhang, Z. Tan, F. Yu, L. Wan, X. Chen, X. Song, Y. Liu, F. Reseghetti, S. Simoncelli, V. Gouretski, G. Chen, A. Mishonov, J. Reagan, Another Record Ocean Warming Continues Through 2021 Despite La Nina Conditions, *Advances in Atmospheric Sciences*, Vol. 39, pp. 373-385, 2022.

85. R. Daneshfaraz, S. Sadeghfam, E. Arminvash, and J.P. Abraham, Experimental Investigation of Multiple Supercritical Flow States and the Effect of Hysteresis on the Relative Residual Energy in Sudden and Gradual Contractions, *Iranian Journal of Science and Technology, Transactions of Civil Engineering*, doi: 10.1007/s40996-022-00818-9.

4232 29th Ave.
Minneapolis, MN 55406

John P. Abraham

jpabraham@stthomas.edu
612-963-2169

86. R. Daneshfaraz, E. Aminvash, R. Mirzaei, and J.P. Abraham, Predicting the Energy Dissipation of a Rough Sudden Expansion Rectangular Stilling Basin Using the SVM Algorithm, *Journal of Applied Research in Wastewater*, (in press). Doi: 10.22126/arww.2021.5886.1195.

87. A. Armanous, A. Negm, A. Javadi, J.P. Abraham, and T. Gado, Impact of Inclined Double-Cutoff Walls Under Hydraulic Structures on Uplift Forces, Seepage Discharge, and Exit Hydraulic Gradient, *Ain Shams Engineering Journal*, Vol. 13, paper no. 101531, 2022.

88. R. Daneshfaraz, S. Sadeghfam, V. Hasanniya, J.P. Abraham, and R. Norouzi, Experimental Investigation on Hydraulic Efficiency of Vertical Drop Equipped with Vertical Screens, *Teknit Dergi*, Vol. 33, no. 5, 2022. DOI: 10.18400/tekderg.755938.

89. A. Ghaderi, M. Dasineh, R. Daneshfaraz, and J.P. Abraham, Reply to the Discussion on Paper: 3-D Numerical Simulation of Water Flow over a Broad Created weir with Openings by Daneshfaraz et al 2019, *ISH Journal of Hydraulic Engineering*, Vol. 28, pp. 564-566, 2022.

90. F. Salmasi and J.P. Abraham, Discharge Coefficients for Ogee Spillways, Water Supply, Vol. 22, pp. 1255-1274, 2022.

91. R. Norouzi, P. Sihag, R. Daneshfaraz, J.P Abraham, and V. Hasanna, Predicting Relative Energy Dissipation for Vertical Drops Equipped with a Horizontal Screen Using Soft Computing Techniques, *Water Supply*, Vol. 22, pp. 1075-1093, 2022.

92. F. Malekzadeh, F. Salmasi, J.P. Abraham, and H. Arvanaghi, Numerical Investigation of the Effect of Geometric Parameters on Discharge Coefficients for Broad-Crested Weirs with Sloped Upstream and Downstream Faces, *Applied Water Science*, Vol. 12, paper no. 110, 2022.

93. F. Salmasi and J.P. Abraham, Genetic Algorithms to Optimizing Stepped Spillways to Maximize Energy Dissipation, *Water Supply*, Vol. 22, pp. 1255-1274, 2022.

94. Y. Liu, L. Cheng, Y. Pan, J.P. Abraham, B. Zhang, J. Zhu, and J. Song, Climatological seasonal variation of the upper ocean salinity, *International Journal of Climatology*, Vol. 42, pp. 3477-3498, 2022.

2021

95. M. Seifollahi, S, M. Lotfollahi-Yaghin, F. Kalateh, R. Daneshfaraz, S. Abbasi, and J.P. Abraham, Estimation of the Local Scour from a Cylindrical Bridge Pier Using a Compilation Wavelet Model and Artificial Neural Network, *Journal of Hydraulic Structures,* Vol. 7, pp. 1-22, 2021.

96. B. Ferry and J.P. Abraham, Mechanical Design of Long-Term Body-Adhered Medical Devices to Maximize On-Body Survival, *Journal of Biomedical Science and Engineering*, Vol. 19, pp. 325-337, 2021.

4232 29th Ave.
Minneapolis, MN 55406

John P. Abraham

jpabraham@stthomas.edu
612-963-2169

97. F. Salmasi, J.P. Abraham, and A. Salmasi, Effect of Stepped Spillways on Increasing Dissolved Oxygen in Water, an Experimental Study, *Journal of Environmental Management*, Vol. 299, paper 113600, 2021.

98. C. Garcia-Soto, L. Cheng, L. Caeser, E.B. Jewett, A. Cheripka, I.G. Rigor, A. Cabellero, S. Chiba, J.C. Baez, T. Zielinski, and J.P. Abraham, An Overview of Ocean Climate Change Indicators: Sea Surface Temperature, Ocean Heat Content, Ocean pH, Dissolved Oxygen Concentration, Artic Ice Extent, Thickness, and Volume, *Frontiers in Marine Science, Global Ocean and Future Ocean,* Vol. 8, paper 642372, 2022: doi: 0.3389/fmars.2021.642372, 2021.

99. J.P. Abraham, T. Wei, and Y. Wang, Layered Structure of Turbulent Natural Convection Over a Vertical Flat Plate, *International Journal of Heat and Mass Transfer*, Vol. 181, paper 121866, 2021.

100. F. Salmasi, F. Nahrain, J.P. Abraham, and A.T. Aghdam, Prediction of Discharge Coefficients for Broad-Crested Weirs Using Expert Systems, *Journal of Hydraulic Engineering*, doi: 10.1080/09715010.2021.1983477.

101. F. Salmasi and J.P. Abraham, Closure to "Expert System for Determining Discharge Coefficients for Inclined Slide Gates Using Genetic Programming", *Journal of Irrigation and Drainage Engineering,* Vol. 147, paper no. 07021018, 2021.

102. L. Olsen, S. Bhattacharyya, L. Cheng, W. Minkowycz, and J. Abraham, Heat Transfer Enhancement for Internal Flows with a Centrally Located Circular Obstruction and the Impact of Buoyancy, *Heat Transfer Engineering* doi: 10.1080/01457632.2021.2016129.

103. F. Salmasi and J.P. Abraham, Closure to "Discharge Coefficients for Rectangular Broad-Crested Gabion Weirs: An Experimental Study", *Journal of Irrigation and Drainage Engineering*, Volume 147, 2021.

104. R. Daneshfaraz, E. Aminvash. S. Di Francesco, A. Najibi, and J.P. Abraham, Three-Dimensional Study of the Effect of Block Roughness Geometry on Inclined Drop, *Journal of Numerical Methods in Civil Engineering*, Vol. 6, pp. 1-9, 2021.

105. J.C.K. Tong, J.M.Y. Tse, J.P. Abraham, P.J. Jones, Correlation Between Simulations and Measurements of an Eco-House Design for Mongolia, *Journal of Building Engineering*, Vol. 42, no. 10, paper no. 102774, 2021. DOI:10.1016/j.jobe.2021.102774.

106. R. Daneshfaraz, M. Abam, M. Heidarpour, S. Abbasi, M. Seifollahi, and J.P. Abraham, The Impact of Cables on Local Scouring of Bridge Piers Using

4232 29th Ave.
Minneapolis, MN 55406
John P. Abraham
jpabraham@stthomas.edu
612-963-2169

Experimental Study and ANN, ANFIS Algorithms, *Water Supply* (in press). DOI:10.2166/ws2021.215

107. R. Daneshfaraz, E. Aminvash, A. Ghaderi, A. Kuriqi, and J.P. Abraham, Three-Dimensional Investigation of Hydraulic Properties of Vertical Drop in the Presence of Step and Grid Dissipators*, Symmetry, Computer Engineering Science and Symmetry Turbulence and Multiphase Flows*, Vol. 13, paper no. 895, 2021.

108. T. Wei, Y. Wang, and J.P. Abraham, Integral Properties of Turbulent Natural Convection over a Vertical Flat Plate, *International Communications in Heat and Mass Transfer*, Vol. 125, paper 105286, 2021.

109. R. Daneshfaraz, E. Aminvash, A. Ghaderi, M. Bagherzadeh, J.P. Abraham, SVM Performance in Predicting the Effect of Horizontal Screens on Vertical Hydraulic Performance of a Vertical Drop, *Applied Sciences*, Vol. 11, no. 9, paper no. 4238, 2021. DOI: 10.3390/app11094238.

110. F. Salmasi, M. Nouri, P. Sihag, and J.P. Abraham, Application of SVM, ANN, GRNN, RF, GP, and RT Models for Predicting Discharge Coefficients of Oblique Sluice Gates Using Experimental Data, *Water Supply*, Vol. 21, pp. 232-248, 2021.

111. A. Aghdam, F. Salmasi, J.P. Abraham, and H. Arvanaghi, Effect of Drain Pipes on Uplift Force and Exit Hydraulic Gradient and the Design of Gravity Dams Using the Finite Element Method, *Geotechnical and Geological Engineering*, Vol. 39, pp. 3383-3399, 2021.

112. Z. Tan, F. Reseghetti, J.P. Abraham R. Cowley, K. Chen, J. Zhu, B. Zhang, and L. Cheng, Examining the Influence of Recording System on the Pure Temperature Error in XBT Data, *Journal of Atmospheric and Oceanic Technology,* Vol. 38, pp. 759-776, 2021.

113. R. Daneshfaraz, V. Hasannia, R. Norouzi, P. Sihag, S. Sadeghfam, and J.P. Abraham, Investigating the Effect of Horizontal Screen on Hydraulic Parameters of a Vertical Drop, Iranian Journal of Science and Technology, *Transactions of Civil Engineering*, Vol. 45, pp. 1909-1917, 2021.

114. L. Cheng, J.P. Abraham, K.E. Trenberth, J.T. Fasullo, T.L. Boyer, R. Locarnini, B. Zhang, F. Yu, L. Wan, X. Chen, X. Song, Y. Liu, M.E. Mann, F. Reseghetti, S. Simoncelli, V. Gouretski, G. Chen, and J. Zhu, Upper Ocean Temperatures Hit Record High in 2020, *Advances in Atmospheric Sciences,* Vol. 38, pp. 523-530, 2021. **Altmetric score = 1057, top 1%, January 2021.**

115. M. Nouri, P. Sihag, F. Salmasi, and J.P. Abraham, Prediction of Homogeneous Earthen Slope Safety Factors Using the Forest and Tree Based Modeling, *Geotechnical and Geological Engineering*, Vol. 39, paper no. 04020148, 2021.

4232 29th Ave. **John P. Abraham** jpabraham@stthomas.edu
Minneapolis, MN 55406 612-963-2169

116. F. Salmasi, B. Nourani, J.P. Abraham, and R. Nouzi, Numerical Investigation of Relief Well Performance for Decreasing Uplift Pressure Under Embankment Dams, *International Journal of Environmental Science and Technology*, Vol. 18, pp. 2819-2830, 2021. doi: 10.1007/s13762-020-03030-2.

117. R. Daneshfaraz, M. Bagherzadeh, R. Esmaeeli, R. Norouzi, and J.P. Abraham, Study of the Performance of Support Vector Machine for Predicting Vertical Drop Hydraulic Parameters in the Presence of Dual Horizontal Screens, *Water Supply,* Vol. 21, pp. 217-231, 2021.

118. F. Salmasi, J.P. Abraham, Prediction of Discharge Coefficients for Sluice Gates Equipped With Different Geometry Sills Under the Gate Using Multiple Non Linear Regression (MNLR), *Journal of Hydrology*, Vol. 597, paper 125728, 2021. doi:10.1016/j.jhydrol.2020.125728.

119. F. Salmasi, N. Sabahi, and J. P. Abraham, Discharge Coefficients for Rectangular Broad Crested Gabion Weirs: An Experimental Study, *Journal of Irrigation and Drainage Engineering,* Vol. 147, paper 04021001, 2021.

120. M. Asl, R. Daneshfaraz, J.P. Abraham, S. Valizadeh, Effects of Hydraulic Characteristics, Sedimentary Parameters, and Mining of Bed Material on Scour Depth of Bridge Pier Groups, *Journal of Performance of Constructed Facilities*, Vol. 35, paper no. 04020148, 2021.

121. G. Li, L. Cheng, J. Zhu, K.E. Trenberth, M.E. Mann and J.P. Abraham, Increasing Ocean Stratification Over the Past Half Century, *Nature Climate Change,* Vol. 10, pp. 1116-1123, 2020. **Altmetric score = 700, top 1%, July 2021.**

122. N. Sartipi, F. Salmasi, J. Abraham, and A.D. Dalir, Investigation of the Effect of Depth and Distance Between Cutoff Walls on Uplift Force for Gravity Dams, *International Journal of Environmental Science and Technology*, Vol. 18. pp. 1361-1378, 2021.

123. R. Daneshfaraz, R. Norouzi, M. Macedi, A. Bazyar, and J.P. Abraham, Laboratory Study of Energy dissipation in Inclined Drops with a Screen, *Journal of Applied Water Engineering and Research*, Vol. 9, pp. 184-193, 2021.

124. A. Ghaderi, R. Daneshfaraz, J.P. Abraham, and M. Torabi, Effect of Different Channels on Discharge Coefficient of Labyrinth Weirs, *Teknik Dergi*, Vol. 32 paper no. 626, pp. 11081-11096, 2021.

2020

125. A. Ghaderi, R. Daneshfaraz, S. Abbasi, and J.P. Abraham, Numerical Analysis of the Hydraulic Characteristics of Modified Labyrinth Weirs, *International Journal of Energy and Water Resources*, Vol. 4, pp. 425-436, 2020.

4232 29th Ave. **John P. Abraham** jpabraham@stthomas.edu
Minneapolis, MN 55406 612-963-2169

126. F. Salmasi and J.P. Abraham, An Expert System for Determining Discharge Coefficients for Inclined Slide Gates Using Genetic Programing, *Journal of Irrigation and Drainage Engineering*, Vol. 146, paper number 060200013, 2020.

127. A. Ghaderi, M. Shokri. J.P. Abraham, Estimation of Actual Evapotranspiration Using Remote Sensing Method and SEBAL Algorithm- A Case Study: Ein Khosh Plain, Iran, *Hydrology*, Vol. 7, doi: 10.3390/hydrology7020036, 2020.

128. F. Salmasi, M. Nouri, and J.P. Abraham, Upstream Cutoff and Downstream Filters to Control Seepage in Dams, *Water Resources Management*, Vol. 34, pp. 4271-4288, 2020.

129. L. Cheng, K.E. Trenberth, N. Gruber, M.E. Mann, J.P. Abraham, J.T Fasullo, G. Li, X. Zhao, and J. Zhu, Improved Estimates of Changes in Upper Ocean Salinity and the Hydrological Cycle, *Journal of Climate*,Vol.33, pp. 10357-10381, 2020.

130. F. Salmasi, R. Norouzi, J.P. Abraham, B. Nourani, S. Samadi, Effect of Inclined Clay Core on Embankment Dam Seepage and Stability Through LEM and FEM, *Geotechnical and Geological Engineering*, Vol. 38, pp. 6571-6586, 2020.

131. A. Ghaderi, R. Daneshfaraz, S. Abbasi, and J.P. Abraham, Numerical Analysis of the Hydraulic Characteristics of Modified Labyrinth Weirs, *International Journal of Energy and Water Resources,* Vol. 4, pp. 425-436, 2020.

132. J.P. Abraham, B. D. Plourde, and L. Cheng, Using Heat to Kill SARS-CoV-2, *Reviews in Medical Virology*, Vol. 30, e2115, 2020. **Altmetric score = 376, top 1%, July, 2021.**

133. A. Ghaderi, R. Daneshfaraz, M. Torabi, J.P. Abraham, and H.M. Azamathulla, Experimental Investigation on Effective Scouring Parameters Downstream from Stepped Spillways, *Water Supply*, Vol. 20, pp. 1988-1998, 2020.

134. F. Salmasi, and J.P. Abraham, Predicting Seepage from Unlined Earthen Channels Using the Finite Element Method and Multi Variable Nonlinear Regression, *Agricultural Water Management*, Volume 234, Paper no. 106148, 2020.

135. F. Salmasi, B. Naourani, and J.P. Abraham, Investigation of the Effect of Different Configurations of Double-Cutoff Walls Beneath Hydraulic Structures on Uplift Forces and Exit Hydraulic Gradients, *Journal of Hydrology*, vol. 586, dpo: 10.1016/j.hydrol.2020.123858, 2020.

136. A. Ghaderi, S. Abbasi, J.P. Abraham, H. M. Azamathulla, Efficiency of Trapezoidal Labyrinth Shaped Stepped Spillways, *Flow Measurement and Instrumentation*, paper no. 101711, 2020, doi: 10.1016/j.flowmeasinst.2020.101711.

137. L. Cheng, J.P. Abraham, J. Zhu, K.E. Trenberth, J. Fasullo, T. Boyer, R. Locarnini, B. Zhang, F. Yu, L. Wan, X. Chen, X. Song, Y. Liu, and M.E. Mann, Record-Setting

4232 29th Ave. **John P. Abraham** jpabraham@stthomas.edu
Minneapolis, MN 55406 612-963-2169

Ocean Warmth Continued in 2019, *Advances in Atmospheric Sciences*, Vol. 37, 1-6, 2020. **(This paper was in the top 100 of all published scientific papers in the year 2020, ranked by Altmetric. Also, second of all 2020 papers in the subject area of climate. Altmetric score = 3957, top 1%, January 2021. Recipient of the 2022 AAS Esteemed News and Views Award).**

138. F. Salmasi, and J.P. Abraham, Discussion of "Hydrodynamics of Rectangular Broad-Crested Porous Weirs" by Akbar Safarzadeh and Seyed Hossein Mohajeri, *J. Irrig. Drain. Eng*. Vol. 146, paper no. 07020004, 2020.

139. R. Daneshfaraz, M.M. Asl, S. Razmi, R. Norouzi, and J.P. Abraham, Experimental Investigation of the Effect of Dual Horizontal Screens on the Hydraulic Performance of a Vertical Drop, *International Journal of Environmental Science and Technology*, Vol. 17, pp. 2927-2937, 2020.

140. J.M. Gorman, et al., Memoriam, Ephraim Sparrow, *International Journal of Heat and Mass Transfer*, Vol. 148, article no. 18755, 2020.

141. F. Salmasi, J.P. Abraham, Discharge Coefficients for Ogee Weirs Including the Effects of a Sloping Upstream Face, *Water Science and Engineering*, doi: 10.2166/ws.2020.064, 2020.

142. F. Salmasi, and Abraham J.P., Discussion of "Hydrodynamics of Rectangular Broad-Crested Porous Weirs" by Akbar Safrazadeh and Seyed Moharjeri, *Journal of Irrigation and Drainage Engineering*, Vol. 146, doi: 10.1061/%28ASCE%29IR.1943-4774.0001450, 2020.

143. R. Daneshfaraz, E. Aminvash, R. Esmaeli, S. Sadeghfam, and J.P. Abraham Experimental and Numerical Investigation for Energy Dissipation of Supercritical Flow in Sudden Contractions, *Journal of Groundwater Science and Engineering*, Vol. 8, pp. 396-404, 2020.

144. R. Daneshfaraz, O. Minaeri, J.P. Abraham, and S. Dadashi, 3-D Numerical Simulation of Flow Over a Broad-Crested Weir with Opening, *Journal of Hydraulic Engineering*, Vol. 24, doi: 10.1080/09715010.1581098, 2020.

2019

145. A. Ghaderi, M. Dasineh, S. Abbasi, and J.P. Abraham, Investigation of Trapezoidal Sharp-Crested Weir Discharge Coefficients Under Subcritical Flow Regimes, *Applied Water Science*, Vol. 10, article no. 31, 2019.

146. G. Li, Y. Zhang, J. Xiao, J.P. Abraham, L. Cheng, and J. Zhu, Examining the Salinity change in the upper Pacific Ocean During the Argo Period, *Climate Dynamics* Vol. 53, pp. 6055-6074, 2019.

147. J.P. Abraham, K. Diller, A Review of Hot Beverages – Satisfying Consumer Preferences and Safety, *J. Food Science*, Vol. 84, pp. 2011-2014, 2019.

4232 29th Ave.
Minneapolis, MN 55406

John P. Abraham

jpabraham@stthomas.edu
612-963-2169

148. J.M. Gorman, et al., In Memoriam, Ephraim M. Sparrow (May 27, 1928 – August 1, 2019), *Numerical Heat Transfer Part A*, Vol. 76, pp. 181-184, 2019.

149. F. Jafari, F. Salmasi, and J.P. Abaham, Numerical Investigation of Granular Filer Under the Bed of a Canal, *Applied Water Science*, Vol. 9, Article no. 137, 2019

150. J. P. Abraham, Heat risks associated with synthetic fields, *International Journal of Hyperthermia*, Vol. 24, pp. 516-517, 2019.

151. T. Wei and J.P. Abraham, Heat Transfer Regimes in Fully Developed Circular tube flows, a map of flow regimes, *International Communications in Heat and Mass Transfer*, Vol. 104, 147-152, 2019.

152. B.D. Plourde, A. Gikling, T. Marsh, M.A. Riemenschneider, J.L. Fitzgerald, W.J. Minkowycz, J. Kiplagat, J.P. Abraham, Design and Evaluation of a Concentrated Solar-Powered Thermal-Pasteurization System, *Journal of Solar Energy Research*, Vol. 6, pp. 34-42, 2019.

153. E. Dodangeh, K. Shahedi, K. Solalani, J.T., Shiu, J.P. Abraham, Data-Based Bivariate Uncertainty Assessment of Extreme Rainfall-Runoff Using Copulas: Comparison Between Annual Maximum Series (AMS) and Peaks Over Threshold (POT), *Environmental Monitoring and Assessment*, Vol. 191:67, 2019.

154. F. Salmasi, M. Nouri, and J.P. Abraham, Laboratory Study of the Effect of Sills on Radial Gate Discharge Coefficient, *KSCE Journal of Civil Engineering*, Vol. 23, pp. 2117-2125, 2019.

155. Benoit et al., Measuring Global Ocean Heat Content to Estimate the Earth Energy Imbalance, *Frontiers in Marine Science*, *OceanObs'19: An Ocean of Opportunity*, Vol. 6, pp. 198-228, doi: 10.3389/fmars.2019.00432, 2019.

156. L. Cheng, J. Zhu, J.P. Abraham, K. E. Trenberth, J. T. Fasullo, B. Zhang, F. Yu, L. Wan, Z. Chen, X. Song, 2018 Continues Record Global Warming, *Advances in Atmospheric Sciences*, 36, pp. 249-252, 2019. **Altmetric score = 646, top 1%, January 2021.**

157. L. Cheng, G. Wang, J.P. Abraham, G. Huang, Decadal Ocean Heat Redistribution Since the Late 1990s and its Association with Key Climate Modes, *Climate*, Vol. 6, 91, 2019 (editor's choice award winner).

158. L. Cheng, J.P. Abraham, Z. Hausfather, and K.E. Trenberth, How fast are the oceans warming?, *Science*, Vol. 363, pp. 128-129, 2019. **Altmetric score = 2853, top 1%, January 2021, ranked 18 out of the top 30 papers in the field of Global Sustainability.**

4232 29th Ave.
Minneapolis, MN 55406

John P. Abraham

jpabraham@stthomas.edu
612-963-2169

159. J.P. Abraham, E.M. Sparrow, J.M. Gorman, Y. Zhao, and W.J. Minkowycz, Application of an Intermittency Model for Laminar, Transitional, and Turbulent Internal Flows, *Journal of Fluids Engineering*, Vol. 141, paper no. 071204, 2019.

160. J.P. Abraham, J. R. Stark, J.M. Gorman, E. M. Sparrow, W.J. Minkowycz, Tissue Burns Due to Contact Between a Skin Surface and Highly Conducting Metallic Media in the Presence of Inter-Tissue Boiling, *Burns*, Vol. 45, pp. 369-378, 2019.

161. J.M. Gorman, E. M. Sparrow, C.J. Smith, A. Ghoash, J.P. Abraham, R. Daneshfaraz, A. Rezazedeh Joudi, In-Bend Pressure Drop and Post-Bend Heat Transfer for a Bend with a Partial Blockage at its inlet, *Numerical Heat Transfer A*, Vol. 73, pp. 743-767, 2018.

162. A. Bahro, Z. Igyarto, C. Williams, J.P. Abraham, and B.J. Martinsen, Treatment of Critical Hand Schemia via Orbital Atherectomy and Focal Force Balloon Angioplasty: A Mini-Review, *Cardiovascular Revascularization Medicine*, Vol. 20, pp. 248-253, 2019.

2018

163. J.P. Abraham, R. Maki, Hydrodynamics of Laminar Flow Through Dimpled Pipes, *MOJ Civil Engineering*, Vol. 4, pp. 150-154, 2018.

164. L. Cheng, H. Luo, T. Boyer, R. Cowley, J. Abraham, V. Gouretski, F. Reseghetti, and J. Zhu, How Well Can We Correct Systematic Errors in Historical XBT Data? *Journal of Atmospheric and Oceanic Technology*, Vol. 35, pp. 1103-1125, 2018.

165. G. Wang, L. Cheng, J.P. Abraham, C. Li, Consensuses and Discrepancies of Basin-Scale Ocean Heat Content Changes in Different Ocean Analyses, *Climate Dynamics*, Vol. 50, pp. 2471-2487, 2018

166. R. Daneshfaraz, A.R. Joudi, J.P. Abraham, Numerical Investigation on the Effect of Sudden Contraction on Flow Behavior in a 90-Degree Bend, *Korean Journal of Civil Engineering*, Vol. 22, pp 603-612, 2018.

167. M. T. Sattari, A. Farkhondeh, and J.P. Abraham, Estimation of Sodium Adsorption Ratio Indicator Using Data Mining Methods: A Case Study in Urmia Lake Basin, Iran, *Environmental Science and Pollution Research*, Vol. 25, pp. 4776-4786, 2018.

168. M.T. Sattari, R. Misabbasi, R. S. Sushab, and J.P. Abraham, Prediction of Groundwater Level in the Ardebil Plain Using Support Vector Regression and the M5 Tree Model, *Groundwater Journal,* Vol. 56, pp. 636-646, 2018.

169. L. Cheng, K.E. Trenberth, J. T. Fasullo, J.P. Abraham, T.L. Boyer, K. von Schuckmann, and J. Zhu, Taking the Pulse of the Planet, *EOS,* Vol. 98, pp 14-15, 2018.

4232 29th Ave.
Minneapolis, MN 55406
John P. Abraham
jpabraham@stthomas.edu
612-963-2169

170. J.P. Abraham, B.D Plourde, L. J. Vallez, Comprehensive Review and Study of Buoyant Air Flow Within Positive-Pressure Hospital Operating Rooms, *Numerical Heat Transfer A*, Vol. 72, pp. 1-20, 2018.

171. M.R. Sattari, M. Pal, R. Mirabbasi, and J.P. Abraham, Ensemble of M5 Model Tree Based Modelling of Sodium Adsorption Ratio, *Journal of Artificial Intelligence and Data Mining*, Vol. 6, pp. 69-78, 2018.

2017

172. J.P. Abraham, A Global Warming Primer: Answering Your Questions about the Science, the Consequences, and the Solutions, *Physics Today*, Vol. 70, no. 3, 2017.

173. M.R. Sattari, Dodangeh, and J.P. Abraham, Estimation of Daily Soil Temperature Via Data Mining Techniques in Semi-Arid Climate Conditions, *Earth Sciences Research Journal*, Vol. 21, pp. 85-93, 2017.

174. J.P. Abraham, L. Cheng, M.E. Mann, Future Climate Projections Allow Engineering Planning, *Forensic Engineering*, Vol. 170, pp. 54-57, 2017.

175. B.D. Plourde, L.J. Vallez, B. B. Nelson-Cheeseman, J.P. Abraham, Transcutaneous Recharge: A Comparison of Numerical Simulation to In Vivo Experiments *Neuromodulation*, Vol. 20, pp. 613-621, 2017.

176. E.M. Sparrow, B.B Nelson-Cheeseman, W.J. Minkowycz, J.M. Gorman, and J.P. Abraham, Use of Multi-Lumen Catheters to Preserve Injected Stem Cell Viability and Injection Dispersion*, Cardiovascular Revascularization Medicine*, Vol. 18, pp. S49-S57, 2017.

177. L.J. Vallez, B.D. Plourde, J.E. Wentz, B. B. Nelson-Cheeseman, J.P. Abraham, A Review of Scald Burn Injuries, *Internal Medicine Review*, Vol. 3, pp. 1-18, 2017.

178. R. Daneshfaraz, H. Sadeghi, A. R. Joudi, J.P. Abraham, Experimental Investigation of Hydraulic Jump Characteristics in Contractions and Expansions, *Sigma Journal of Engineering and Natural Sciences*, Vol. 35, pp. 87-98, 2017.

179. L.J. Cheng, K.E. Trenberth, T. Boyer, J. T. Fasullo, L. Zhu, J.P. Abraham, Improved Estimates of Ocean Heat Content from 1960-2015, *Science Advances*, Vol. 4, paper no. e1601545, 2017. **Altmetric Score = 753, top 1%, January 2021.**

180. J.M. Gorman, E., M. Sparrow, J.P. Abraham, W.J. Minkowycz, Heat Transfer Design Methodology Treating a Heat Exchanger Device and its Fluid-Mover Partner as a Single System, *Heat Transfer Engineering*, Vol. 38, pp. 841-852, 2017.

181. R.T. Bourdon, B.B. Nelson-Cheeseman, and J.P. Abraham, Review on the Treatment and Avoidance of Scald Injuries, *World Journal of Dermatology*, Vol. 6, pp. 17-26, 2017.

4232 29th Ave.
Minneapolis, MN 55406

John P. Abraham

jpabraham@stthomas.edu
612-963-2169

2016

182. B.D. Plourde, J.R. Stark, J. P. Abraham, A New Catheter Technology to Deliver Vascular Stem-Cells, *Global Journal of Stem Cell Biology and Transplantation*, Vol. 2, pp. 7-16, 2016.

183. J.R. Stark, S.R. Romero, J.M. Gorman, J.P. Abraham, E.M. Sparrow, Modulated-Power Implantable Neuromodulation Devices and Their Impact on Surrounding Tissue Temperatures, *Journal of Biomedical Science and Engineering*, Vol. 9, pp. 545-562, 2016.

184. L. Cheng, K.E. Trenberth, M.D. Palmer, J. Zhu, and J.P. Abraham Observed and Simulated Full-Depth Ocean Heat Content Changes for 1970-2005, *Ocean Sciences*, Vol. 12, pp. 925-935, 2016.

185. J.M. Gorman, E.M. Sparrow, J.P. Abraham, W. J. Minkowycz, Evaluation of the Efficacy of Turbulence Models for Swirling Flows and Effect of Turbulence Intensity on Heat Transfer, *Numerical Heat Transfer B*, Vol. 70, pp. 485-502, 2016.

186. J.P. Abraham, B.B. Nelson Cheeseman, E. M. Sparrow, J.E. Wentz, J.M. Gorman, S. E. Wolf, Comprehensive Method to Predict and Quantify Scald Burns from Beverage Spills, *Int. J. Hyperthermia*, Vol. 32, pp. 900-910, 2016.

187. B.D. Plourde, L.J. Vallez, B. Sun, B.B. Nelson-Cheeseman, J.P. Abraham, Alterations of Blood Flow Through Arteries Following Atherectomy and the Impact on Pressure Variation and Velocity, *Cardiovascular Engineering and Technology*, Vol. 7, pp. 280-289, 2016.

188. N.K. Langat, T. Thorusa, J.P. Abraham, J. Wanyoko, Performance of an Improved Fluidized System for Processing Green Tea, *World Academy of Science Engineering and Technology*, Vol. 10, 1045-1050, 2016.

189. L. Cheng, J. Abraham, G. Goni, T. Boyer, S. Wijffels, R. Cowley, V. Gouretski, F. Reseghetti, S. Kizu, S. Dong, F. Bringas, M. Goes, L. Houpert, J. Sprintall, and J. Zhu, XBT Science: Assessment of XBT Biases and Errors, *Bulletin of the American Meteorological Society*, Vol. 97, pp. 924-933, 2016.

190. J.P. Abraham, R. Cowley, L. Cheng, Quantification of the Effect of Water Temperature on the Fall Rate of eXpendable BathyThermographs, *Journal of Atmospheric and Oceanic Technology*, Vol. 6, pp. 1271-1284, 2016.

191. R.T. Bourdon, B.B. Nelson-Cheeseman, and J.P. Abraham, Prediction, Identification, and Initial Treatment Guidelines for Scald Injuries, *Austin Journal of Emergency and Critical Care Medicine, Special Issue on Burns*, Vol. 3, pp. 1043-1049, 2016.

192. J.C.K. Tong, J.P. Abraham, J.M.Y. Tse, W.J. Minkowycz, and E.M. Sparrow, New Archive of Heat Transfer Coefficients from Square and Chamfered Cylinders in Crossflow, *International Journal of Thermal Sciences*, Vol. 105, pp. 218-223, 2016.

4232 29th Ave.
Minneapolis, MN 55406

John P. Abraham

jpabraham@stthomas.edu
612-963-2169

193. L. Cheng, K.E. Trenberth, M.D. Palmer, J. Zhu, and J.P. Abraham, Observed and Modeled Ocean Heat Content Changes Since 1970, *Ocean Sciences,* Vol 12, pp. 925-936, 2016.

194. R. Daneshfaraz, A. Ghahramanzadeh, A. Ghaderi, A. Rezazadeh Joudi, and J.P. Abraham, Investigation of the Effect of Edge Shape on Characteristics of Flow Under Vertical Gates, *Journal AWWA*, Vol. 8, pp. E425-432, 2016.

195. J.P. Abraham, B.D. Plourde, L.J. Vallez, and B.B. Nelson-Cheeseman, Correcting a Prevalent Misunderstanding of Burns, *Burns*, Vol. 42, pp. 715-716, 2016.

196. J. P. Abraham and B.D. Plourde, Validation of Numerically Simulated Tissue Temperatures During Transcutaneous Recharge of Neurostimulation Systems, *Journal of Neuromodulation*, Vol. 19, pp. 161-170. 2016.

197. L.J. Vallez, B.D. Plourde, and J.P. Abraham, A New Computational Thermal Model for the Whole Human Body: Applications to Patient Warming Blankets, *Numerical Heat Transfer A*, Vol. 69, pp. 227-241, 2016.

2015

198. J.P. Abraham, B.D. Plourde, B. Sun, L.J. Vallez, and C.S. Staniloae, The Effect of Plaque Removal on Pressure Drop and Flowrate Through a Stenotic Lesion*, Biology and Medicine,* Vol. 8, article no. 1000261, 2015.

199. L.J. Vallez, B. Sun, B.D. Plourde, J.P. Abraham, and C.S. Staniloae, Numerical Analysis of Arterial Plaque Thickness and its Impact on Artery Wall Compliance, *J. Cardiovascular Medicine and Cardiology*, Vol. 2, pp. 26-34, 2015.

200. D. Nguyen, J. M. Gorman, E.M. Sparrow, and J.P. Abraham, Convective Heat Transfer Enhancement Versus Disenhancement: Impact of Fluid-Mover Characteristics, *Applied Thermal Engineering,* Vol. 90, pp. 242-249, 2015.

201. B. Sun, L.J. Vallez, D.B. Plourde, J. R. Stark, and J.P. Abraham, Influence of Supporting Tissue on the Deformation and Compliance of Healthy and Diseased Arteries, *Journal of Biomedical Science and Engineering*, Vol. 8, pp. 490-499, 2015.

202. J.P. Abraham, B.D Plourde, L.J. Vallez, J.R. Stark, and K. R. Diller, Estimating the Time and Temperature Relationship for Causation of Deep-partial Thickness Skin Burns, *Burns*, Vol. 41, pp. 1741-1747, 2015.

203. G. Foster and J.P. Abraham, Lack of Evidence for a Slowdown in Global Temperature, US Climate Variability and Predictability Program (CLIVAR) Summer 2015, Vol. 13, pp. 6-9, 2015.

4232 29th Ave. **John P. Abraham** jpabraham@stthomas.edu
Minneapolis, MN 55406 612-963-2169

204. L. Cheng, J. Zhu, and J.P. Abraham, Global Upper Ocean Heat Content Estimation: Recent Progresses and the Remaining Challenges, *Atmospheric and Oceanic Science Letters*, Vol. 8, pp. 333-338, 2015.

205. M. Richardson, Z. Hausfather, D.A. Nuccitelli, K. Rice, and J.P. Abraham, Misdiagnosis of Earth Climate Sensitivity Based on Energy Balance Model Results, *Science Bulletin*, Vol. 60, pp. 1360-1377, 2015.

206. B.D. Plourde and J.P. Abraham, Design and Development of a New Cell Infusion Catheter, *World Biomedical Frontiers*, ISSN:2328-0166, 2015.

207. B.D. Plourde, J.P. Abraham, and W.J. Minkowycz, Continuous Flow Solar Thermal Pasteurization of Drinking Water: Methods, Devices, Microbiology, and Analysis, *Renewable Energy,* Vol. 81, pp. 795-803, 2015.

208. J.M. Gorman, M. Carideo, E.M. Sparrow, and J.P. Abraham, Heat Transfer and Pressure Drop Comparison of Louver- and Plain-finned Heat Exchangers Where One Fluid Passes Through Flattened Tubes, *Case Studies in Thermal Engineering,* Vol. 5, pp. 122-126, 2015.

209. J.C.K. Tong, J.P. Abraham, J.M.Y. Tse, and E.M. Sparrow, Impact of Chamfer Contours to Reduce Column Drag, *Engineering and Computational Mechanics*, Vol. 168, pp. 79-88, 2015.

210. D. Egbe, T. Mayah, E. Ebota, P. Egbe, J. Abraham, Performance Evaluation and Improvement on a Melon Seed Shelling Machine, *World Journal of Agricultural Sciences and Engineering*, Vol. 1, pp. 157-10, 2015.

211. A. Lundardelli, J.E. Wentz, J.P. Abraham, and B.D. Plourde, Shielding Nozzle Design and Analysis for Atomization-Based Cutting Fluid Systems in Micromachining, *ASME Journal of Micro- and Nano-Manufacturing*, Vol. 3, paper no. 024501, 2015.

212. N. Langat, T. Thoruwa, J. Wanyoko, J. Kiplagat, B.D Plourde, and J.P. Abraham, Models and Experiments for Energy Consumption and Quality of Green Tea Drying, *Energy Science and Engineering*, Vol. 3, 43-50, 2015.

213. T. Scambos and J.P. Abraham, Antarctic Ice Sheet Mass Loss and Future Sea Level Rise, *Forensic Engineering, Proceedings of the Institute of Civil Engineers*, Vol. 168, pp. 81-84, 2015.

214. J.P. Abraham, J.R. Stark, W.J. Minkowycz, Extreme weather: Observations of Precipitation Changes in the USA, *Forensic Engineering, Proceedings of the Institution of Civil Engineers*, Vol. 168, pp. 68-70, 2015.

2014

4232 29th Ave.
Minneapolis, MN 55406
John P. Abraham
jpabraham@stthomas.edu
612-963-2169

215. N. Dib, D.B. Schwalbach, B.D. Plourde, R.E. Kohler, D. Dana, and J.P. Abraham, Impact of Balloon Inflation Pressure on Cell Viability with Single and Multi Lumen Catheters, *Cardiovascular Translation Research*, Vol. 7, pp. 781-787, 2014.

216. J.P. Abraham, J.T. Fasullo, and G. Laden, Continued Global Warming in the Midst of Natural Climate Fluctuations, *Reports of the National Center for Science Communication*, 34(6), 2014.

217. N. Dib, J.P. Abraham, B.D. Plourde, D.B. Schwalbach, D. Dana, L. Myers, K. Hunkler, S.R. D'Silva, T.R. Flower, and R.E. Kohler, TCT-155 A Novel Multi Lumen Compliant Balloon Catheter (ND Infusion Catheter) Preserves Stem Cell Viability and Improves Dispersion When Compared to a Standard Single Lumen Balloon Angioplasty Catheter, *Journal American College of Cardiology*, Vol. 64, 11, 2014.

218. J.P. Abraham, B.D. Plourde, and J.R. Stark, Cryosurgical Treatment of Cancer: The Importance of Modeling, *Journal of Cancer Science and Therapy,* Vol. 6, 2014 (abstract).

219. J.P. Abraham, S. Kumar, B.R. Bickmore, and J.T. Fasullo, Issues Related to the Use of One-Dimensional Ocean Diffusion Models for Determining Climate Sensitivity, *Journal of Earth Science and Climate Change*, Vol. 5, paper 1000220, 2014.

220. T. Shepard, J.P. Abraham, D.S. Schwalbach, S. Kane, D. Sigling, and T. Harrington, Velocity and Density Effect on Impact Force During Water Entry of Spheres, *Journal of Geophysics and Remote Sensing*, Vol. 3, paper no. 1000129, 2014.

221. D.S. Schwalbach, T. Shepard, S. Kane, D. Siglin, T. Harrington, and J.P. Abraham, Effect of Impact Velocity and Mass Ratio During Vertical Sphere Water Entry, *Developments and Applications of Oceanic Engineering*, Vol. 3, 55-62, 2014.

222. J.P. Abraham, B.D. Plourde, J.R. Stark, and W.J. Minkowycz, Improvements to the Quality and Quantity of Ocean Heat Content Measurements, *Journal of Earth Science and Climate Change,* Vol. 5, pp. 100, 2014 (abstract).

223. J.P. Abraham, B.D. Plourde, and K.E. Trenberth, Closing Earth's Energy Balance, *Journal of Earth Science and Climate Change*, Vol. 5, pp. 69, 2014 (abstract).

224. J.M. Gorman, E.M. Sparrow, and J.P. Abraham, Temperature Determination by Means of Optoacoustic Measurements, *Studies in Engineering and Technology*, Vol. 1, 15-20, 2014.

225. J.M. Gorman, E.M. Sparrow, and J.P. Abraham, Slot Jet Impingement Heat Transfer in the Presence of Jet Axis Switching, *International Journal of Heat and Mass Transfer,* Vol. 78, 50-57, 2014.

4232 29th Ave.
Minneapolis, MN 55406
John P. Abraham
jpabraham@stthomas.edu
612-963-2169

226. J.P. Abraham, A review of the HANDY Study, *Cosmopolis*, Vol. 2014-1, pp. 8-87, 2014.

227. J.P. Abraham, Climate Change in the Midwest: Impacts, Risks, Vulnerabilities, and Adaptation. A Review of New Biological Books, *The Quarterly Review of Biology*, Vol. 89, pp. 171-172, 2014.

228. B.D. Plourde, D.B. Schwalbach, J.P. Abraham, and R.E. Kohler, Intracoronary Injection of Medication from Multi-lumen Injection Catheters, *Journal of Medical Devices,* Vol. 8, paper number 020901, 2014.

229. J.P. Abraham, J. Cook, J. T. Fasullo, P. H. Jacobs, S. A. Mandia, and D. A Nuccitelli, Review of the Consensus and Asymmetric Quality of Research on Human-Induced Climate Change, *Cosmopolis*, Vol. 2014-1, pp. 3-18, 2014.

230. B.L. Viglianti, M.W. Dewhirst, J.M. Gorman, and J.P. Abraham, E.M. Sparrow, Rationalization of Thermal Injury Quantification Methods: Application to Skin Burns, *Burns*, Vol. 40, pp. 896-902, 2014.

231. N.M. Naughton, B.D. Plourde, J.R. Stark, S. Hodis, and J. P. Abraham, Impacts of Waveforms on the Fluid Flow, Wall Shear Stress, and Flow Distribution in Cerebral Aneurysms and the Development of a Universal Reduced Pressure, *J. Biomedical Science and Engineering*, Vol. 7, 7-14, 2014.

232. J.M. Gorman, J.P. Abraham, D. B. Schwalbach, T. S. Shepard, J.R. Stark, and F. Reseghetti, Experimental Verification of Drag Forces on Spherical Objects Entering Water, *Journal of Marine Biology and Oceanography*, Vol. 3, paper no. 1000126, 2014.

233. S. Beacher, E.M. Sparrow, J.M. Gorman, and J.P. Abraham, Theory and Numerical Simulation in Thermochemical Ablation, *Numerical Heat Transfer Part A*, Vol. 66, pp. 131-143, 2014.

234. J.P. Abraham, J.M. Gorman, F. Reseghetti, E.M. Sparrow, J.R. Stark, and T.G. Shepard, Modeling and Numerical Simulation of the Forces Action on a Sphere During Early-Water Entry, *Ocean Engineering,* Vol. 76, 1-9, 2014.

235. J.M. Gorman, J.P. Abraham, and E.M. Sparrow, A Novel, Comprehensive Numerical Simulation for Predicting Temperatures Within Boreholes and the Adjoining Rock Bed, *Geothermics*, Vol. 50, pp. 213-219, 2014.

2013

236. J.P. Abraham, B.D. Plourde, G.S. Mowry, and E.M. Sparrow, Experimental Test of Multi-Stage Vertical Axis Turbines for Cellular Communication Applications, *ASME Proceedings,* Paper Number ES2012-91025, pp. 1333-1339, 2013.

4232 29th Ave.
Minneapolis, MN 55406
John P. Abraham
jpabraham@stthomas.edu
612-963-2169

237. D.B. Schwalbach, B.D. Plourde, J.P. Abraham, and R.E. Kohler, Drug Dispersion for Single- and Multi-Lumen Catheters, *Journal of Biomedical Science and Engineering*, Vol. 6, pp. 1021-1028, 2013.

238. N. Dib, R.E. Kohler, J.P. Abraham, B.D. Plourde, D.B. Schwalbach, D. Dana, B.J. Baird, T.R. Flower, L. Myers, and K. Hunkler, TCT-811 Stem Cell Viability Significantly Reduced After Passing Through a Standard Single Lumen Over-the-Wire 0.014 Balloon Angioplasty Cather, *Journal of the American College of Cardiology*, Vol. 62, B246, 2013.

239. D.A. Nuccitelli, J.P. Abraham, R.E. Benestad, and S.A. Mandia, Comment on: Akasofu, S.-I. On The Present Halting of Global Warming, *Climate*, Vol. 1, pp. 76-83, 2013.

240. J.M. Gorman, E. M. Sparrow, and J.P. Abraham, Differences Between Measured Pipe Wall Surface Temperatures and Internal Fluid Temperatures, *Case Studies in Thermal Engineering,* Vol. 1, 13-16, 2013.

241. J.R. Stark, J.M. Gorman, E.M. Sparrow, J.P. Abraham, and R.E. Kohler, Controlling the Rate of Penetration of a Therapeutic Drug Into the Wall of an Artery by Means of a Pressurized Balloon, *Journal of Biomedical Science and Engineering*, Vol. 6, pp. 527-532, 2013.

242. J.P. Abraham, M. Baringer, N.L. Bindoff, T. Boyer, L.J. Cheng, J.A. Church, J.L. Conroy, C.M. Domingues, J.T. Fasullo, J. Gilson, G. Goni, S.A. Good, J. M. Gorman, V. Gouretski, M. Ishii, G.C. Johnson, S. Kizu, J.M. Lyman, A. M. Macdonald, W.J. Minkowycz, S.E. Moffitt, M.D. Palmer, A.R. Piola, F. Reseghetti, K. Schuckmann, K.E. Trenberth, I. Velicogna, and J.K. Willis, A Review of Global Ocean Temperature Observations: Implications for Ocean Heat Content Estimates and Climate Change, *Reviews of Geophysics*, Vol. 51, pp 450-483, 2013. **Altmetric score = 178, top 5%, January 2024.**

243. J.P. Abraham, J.R. Stark, J.M. Gorman, E.M. Sparrow, and R.E. Kohler, A Model of Drug Deposition Within Artery Walls, *J. Medical Devices*, Vol. 7, paper no. 020902, 2013.

244. E.M. Sparrow, N.T. Littlejohn, J.M. Gorman, and J.P. Abraham, Mass Transfer and Particle Separation by Swirl-Chamber and Swirl-Tube Devices, *Numerical Heat Transfer A,* Vol. 64, 611-620, 2013.

245. E.M. Sparrow, J. M. Gorman, and J.P. Abraham, Quantitative Assessment of the Overall Heat Transfer Coefficient U, *Journal of Heat Transfer*, Vol. 135, paper no. 061102, 2013.

246. J.P. Abraham, E.M. Sparrow, J.M. Gorman, J.R. Stark, and R. E. Kohler, A Mass Transfer Model of Temporal Drug Deposition in Artery Walls, *International Journal of Heat and Mass Transfer*, Vol. 58, pp. 632-638, 2013.

4232 29th Ave.
Minneapolis, MN 55406
John P. Abraham
jpabraham@stthomas.edu
612-963-2169

247. R.R. Rend, E. M. Sparrow, D. W. Bettenhausen, and J. P. Abraham, Parasitic Pressure Losses in Diffusers and in Their Downstream Piping Systems for Fluid Flow and Heat Transfer, *International Journal of Heat and Mass Transfer*, Vol. 61, pp. 56-61, 2013.

2012

248. E.M. Sparrow, J.M. Gorman, K.S. Friend, and J.P. Abraham, Flow Regime Determination for Finned Heat Exchanger Surfaces with Dimples/Protrusions, *Numerical Heat Transfer*, Vol. 63, pp. 245-256, 2012.

249. B.D. Plourde, J.P. Abraham, G.S. Mowry, and W.J. Minkowycz, Simulations of Three-Dimensional Vertical-Axis Turbines for Communications Applications, *Wind Engineering*, Vol. 36, pp. 443-454, 2012.

250. J.P. Abraham, B.D. Plourde, G.S. Mowry, and W.J. Minkowycz, Summary of Savonius Wind Turbine Development and Future Applications for Small-Scale Power Generation, *Journal of Renewable and Sustainable Energy*, Vol. 4, paper no. 042703, 2012.

251. J.M. Gorman, EM. Sparrow, J.P. Abraham, and G.S. Mowry, Operating Characteristics and Fabrication of a Uniquely Compact Helical Heat Exchanger, *Applied Thermal Engineering*, Vol. 5, pp. 1070-1075, 2012.

252. E.M. Sparrow, J.M. Gorman, A. Trawick, and J.P. Abraham, Novel Techniques for Measurements of Thermal Conductivity of Both Highly and Lowly Conducting Media, *International Journal of Heat and Mass Transfer*, Vol. 55, pp. 4037-4042, 2012.

253. J.P. Abraham, J.M. Gorman, F. Reseghetti, E.M. Sparrow, and W.J. Minkowycz, Drag Coefficients for Rotating Expendable Bathythermographs and the Impact of Launch Parameters on Depth Predictions, *Numerical Heat Transfer A*, Vol. 62, pp. 25-43, 2012.

254. M. Nelson and J.P. Abraham, Hemodynamics of AV Grafts for Hemodialysis Access, *Journal of Medical Devices,* Vol. 6, article no. 017553, 2012.

255. J.P. Abraham and J. Jeske, Cryosurgical Simulations for Ablation of Kidney Tumors, *Journal of Medical Devices,* Vol. 6, article no 017504, 2012.

256. J.P. Abraham, J.M. Gorman, F. Reseghetti, W.J. Minkowycz, and E. M. Sparrow, Turbulent and Transitional Modeling of Drag on Oceanographic Measurement Devices, *Computational Fluid Dynamics and its Applications* 2012, article ID 567864, doi:10.1155/2012/567864.

2011

4232 29th Ave.
Minneapolis, MN 55406
John P. Abraham
jpabraham@stthomas.edu
612-963-2169

257. J.P. Abraham, J.M. Gorman, F. Reseghetti, K.E. Trenberth, and W.J. Minkowycz, A New Method of Calculating Ocean Temperatures Using Expendable Bathythermographs*, Energy and Environment Research*, Vol. 1, pp. 2-11, 2011.

258. J.R. Stark, J.M. Gorman, M.P. Hennessey, F. Reseghetti, J. Willis, J. Lyman, J.P. Abraham, and M. Borghini, A Computational Method for Determining XBT Depths, *Ocean Sciences*, Vol. 7, pp. 733-743, 2011.

259. B.D. Plourde, J. P. Abraham, G.S. Mowry, and W.J. Minkowycz, Use of Small-Scale Wind Energy to Power Cellular Communication Equipment, *Sensors and Transducers*, Vol. 13, pp. 53-61, 2011.

260. J.P. Gorman, E.M. Sparrow, G.S. Mowry, and J.P. Abraham, Simulation of Helically Wrapped, Compact Heat Exchangers, *Journal of Renewable and Sustainable Energy*, Vol. 3, article no. 043120, 2011.

261. R.D. Lovik, J.P. Abraham, and E.M. Sparrow, Surrogate Human Tissue Temperatures Resulting from Misalignment of Antenna and Implant During Recharging of a Neuromodulation Device, *Journal of Neuromodulation*, Vol. 14, pp. 501-511, 2011.

262. K.E. Trenberth, J.T Fasullo, and J.P. Abraham, Issues in Establishing Climate Sensitivity in Recent Studies, *Remote Sensing,* Vol. 3, pp. 2051-2055, 2011.

263. R.D. Lovik, E. M. Sparrow, J. P. Abraham, C. Zelmer, S. Oh, K. Friend, and D. K. Smith, Effect of Component Misalignment on Human Tissue Temperatures Associated with Recharged Neuromodulation Devices, *Journal of Medical Devices*, Vol. 5, 0207516, 2011.

264. T. Gebreegziabher, E.M. Sparrow, J.P. Abraham, E. Ayorinde, and T. Singh, High-Frequency Pulsatile Pipe Flows Encompassing All Flow Regimes, *Numerical Heat Transfer A*, Vol. 60, pp. 811-826, 2011.

265. J.P. Abraham, M.P. Hennessey, and W.J. Minkowycz A Simple Algebraic Model to Predict Burn Depth and Injury, *International Communications in Heat and Mass Transfer*, Vol. 38, pp. 1169-1171, 2011.

266. J.P. Abraham, B.D. Plourde, G.S. Mowry, E. M. Sparrow, and W.J. Minkowycz, Numerical Simulation of Fluid Flow Around a Vertical-Axis Turbine, *Journal of Renewable and Sustainable Energy*, Vol. 3, article no. 033109, 2011 (doi:10.1063/1.3588037).

267. B.M. Osende, J.P. Abraham, and G.S. Mowry, Small-Scale Use of Solar Power in Remote, Developing Regions: A Case Study, *Journal of Sustainable Development,* Vol. 4, pp. 3-9, 2011.

4232 29th Ave.
Minneapolis, MN 55406
John P. Abraham
jpabraham@stthomas.edu
612-963-2169

268. B.D. Plourde, J. P. Abraham, G. S. Mowry, and W. J. Minkowycz, An Experimental Investigation of a Large, Vertical-Axis Wind Turbine: Effects of Venting and Capping, *Wind Engineering,* Vol. 35, pp. 213-220, 2011.

269. N.N. Johnson, J.P. Abraham, Z.I. Helgeson, W.J. Minkowycz, and E. M. Sparrow, An Archive of Skin-Layer Thicknesses and Properties and Calculations of Scald Burns with Comparisons to Experimental Observations, *Journal of Thermal Science and Engineering Applications*, Vol. 3, paper no. 011003, 2011.

270. Z. Helgeson, J. Jenkins, J. Abraham, and E. Sparrow, Particle Trajectories and Agglomeration/Accumulation in Branching Arteries Subjected to Orbital Atherectomy, *Open Biomedical Engineering Journal*, Vol. 5, pp. 25-38, 2011.

271. L. Steck, E.M. Sparrow, and J.P. Abraham, Non-Invasive Measurement of the Human Core Temperature, *International Journal of Heat and Mass Transfer*, Vol. 54, pp. 949-982, 2011.

272. N. N. Johnson, J. P. Abraham, Z, I. Helgeson and M.P. Hennessey, Simulation of Embolization Particle Trajectories, *Frontiers in Heat Transfer*, Vol. 2, paper no. 023006, 2011.

273. G. Adams, P. Khanna, C. Staniloae, J.P. Abraham, and E.M. Sparrow, Optimal Techniques with the Diamondback 360 System Achieve Effective Results for the Treatment of Peripheral Arterial Disease, *Journal of Cardiovascular Translation Research*, Vol. 4, 220-229, 2011.

274. J.P. Abraham, E. M. Sparrow, and W. J. Minkowycz, Internal-Flow Nusselt Numbers for the Low-Reynolds-Number End of the Laminar-to-Turbulent Transition Regime, *International Journal of Heat and Mass Transfer*, Vol. 54, 584-588, 2011.

275. S. Chelikani, E.M. Sparrow, J.P. Abraham, and W.M. Minkowycz, Mass Transfer in Vascular Access Ports*, International Journal of Heat and Mass Transfer*, Vol. 54, pp. 949-958, 2011.

2010

276. R. Ramazani-Red, S. Chelikani, E. M. Sparrow, and J. P. Abraham, Experimental and Numerical Investigation of Orbital Atherectomy: Absence of Cavitation, *Journal of Biomedical Science and Engineering*, Vol. 3, pp. 1108-1116, 2010.

277. A.P. Thomas and J.P. Abraham, Sawtooth Vortex Generators for Underwater Propulsion, *Open Mechanical Engineering*, Vol. 4, pp. 1-7, 2010.

278. D. K. Smith, R.D. Lovik E. M. Sparrow, and J. P. Abraham, Human Tissue Temperatures Achieved During Recharging of New-Generation Neuromodulation Devices, *International Journal of Heat and Mass Transfer,* Vol. 53, 3292-3299, 2010.

4232 29th Ave. **John P. Abraham** jpabraham@stthomas.edu
Minneapolis, MN 55406 612-963-2169

279. J. P. Abraham, E. M. Sparrow, J. C. K. Tong, and D. W. Bettenhausen, Internal Flows which Transist from Turbulent Through Intermittent to Laminar, *International Journal of Thermal Sciences*, Vol. 49, 256-263, 2010.

280. E.M. Sparrow, J.P. Abraham, Y. Bayazit, R.D. Lovik, and D.K. Smith, Numerical and Experimental Simulations as Symbiotic Tools for Solving Complex Biothermal Problems, *Journal of Medical Devices*, Vol. 4, 027536, 2010.

2009

281. R.D. Lovik, J.P. Abraham, W.J. Minkowycz, and E.M. Sparrow, Laminarization and Turbulentization in a Pulsatile Pipe Flow, *Numerical Heat Transfer Part A*, Vol. 56, 861-879, 2009.

282. R.D. Lovik, J.P. Abraham, and E.M. Sparrow, Tissue-Damage Potential from Transcutaneous Recharge of Neuromodulation Implants, *International Journal of Heat and Mass Transfer*, Vol. 52, pp. 3518-3524, 2009.

283. E.M. Sparrow, J.P. Abraham, and W.J. Minkowycz, Flow Separation in a Diverging Conical Duct: Effect of Reynolds Number and Divergence Angle, *International Journal of Heat and Mass Transfer,* Vol. 52, pp. 3079-3083, 2009.

284. F.A. Hoover and J.P. Abraham, A Comparison of Corn-Based Ethanol with Cellulosic Ethanol as Replacements for Petroleum-Based Fuels, A Review, *International Journal of Sustainable Energy*, Vol. 28, pp. 171-182, 2009.

285. G.S. Mowry, R. Erickson, and J.P. Abraham, Computational Model of a Novel, Two-Cup Horizontal Wind-Turbine System, *Open Mechanical Engineering Journal*, Vol. 3, pp. 26-34, 2009.

286. J.C.K. Tong, E.M. Sparrow, and J. P. Abraham, Geometric Strategies for Attainment of the Identical Outflows Through all of the Exit Ports of a Distribution Manifold in a Manifold System, *Applied Thermal Engineering*, Vol. 29, 3552-3560, 2009.

287. W.J. Minkowycz, J.P. Abraham, and E.M. Sparrow, Numerical Simulation of Laminar Breakdown and Subsequent Intermittent and Turbulent Flow in Parallel Plate Channels: Effects of Inlet Velocity Profile and Turbulence Intensity, *International Journal of Heat and Mass Transfer*, 52, pp. 4040-4046, 2009.

288. J.P. Abraham, G.S. Mowry, R. Erickson, Analysis of Urban Wind Turbines, Clean Technology, pp. 13-16, 2009.

289. J.P. Abraham and A.P. Thomas, Induced Co-Flow and Laminar-to-Turbulent Transition with Synthetic Jets, *Computers and Fluids*, Vol. 38, pp. 1011-1017, 2009.

290. J.P. Abraham, E.M. Sparrow, and J.C.K. Tong, Heat Transfer in All Pipe Flow Regimes - Laminar, Transitional/Intermittent, and Turbulent, *International Journal of Heat and Mass Transfer,* Vol. 52, pp. 557-563, 2009.

4232 29th Ave.
Minneapolis, MN 55406

John P. Abraham

jpabraham@stthomas.edu
612-963-2169

2008

291. J.C. Tong, E.M. Sparrow, and J.P. Abraham, Unified Treatment of Natural Convection in Tall, Narrow, and Flat, Wide Rectangular Channels, *Numerical Heat Transfer A*, Vol. 54, pp. 763-776, 2008.

292. J.P. Abraham, J.C.K. Tong, and E.M. Sparrow, Breakdown of Laminar Pipe Flow into Transitional Intermittency and Subsequent Attainment of Fully Developed Intermittent or Turbulent Flow, *Numerical Heat Transfer B*, Vol. 54, pp. 103-115, 2008.

293. J.P. Abraham, E.M. Sparrow, and R.D. Lovik, Unsteady, Three-Dimensional Fluid Mechanic Analysis of Blood Flow in Plaque-Narrowed and Plaque-Free Arteries, *International Journal of Heat and Mass Transfer*, Vol. 51, 5633-5641, 2008.

294. E.M. Sparrow, J.C.K. Tong, and J.P. Abraham, Fluid Flow in a System with Separate Laminar and Turbulent Zones, *Numerical Heat Transfer A*, Vol. 53 (4), pp. 341-353, 2008.

2007

295. J.P. Abraham and C.M. George, Full-Building Radiation Shielding for Climate Control in Desert Regions, *International Journal of Sustainable Energy*, Vol. 26 (3) pp. 167-177, 2007.

296. J.P. Abraham and E.M. Sparrow, A Thermal Ablation Model Including Liquid-to-Vapor Phase Change, Necrosis-Dependent Perfusion, and Moisture-Dependent Properties, *International Journal Heat and Mass Transfer*, Vol. 50, pp. 2537-2544, 2007.

297. J.C.K. Tong, E.M. Sparrow, and J.P. Abraham, Attainment of Flowrate Uniformity in the Channels that Link a Distribution Manifold to a Collection Manifold*, Journal of Fluids Engineering*, Vol. 129 (9), pp. 1186-1192, 2007.

298. E.M. Sparrow and J.P. Abraham, A Simulation of Gas-Based, Endometrial-Ablation Therapy for the Treatment of Menorrhagia, *Annals of Biomedical Engineering,* Vol. 36 (1), pp. 171-183, 2008

2007

299. J.P. Abraham, E.M. Sparrow, and S. Ramadhyani, Numerical Simulation of a BPH Thermal Therapy – A Case Study Involving TUMT, *Journal of Biomechanical Engineering*, Vol. 129, pp. 548-557, 2007.

300. J.C.K. Tong, E.M. Sparrow, and J.P. Abraham, A Quasi-Analytical Method for Fluid Flow in a Multi-Inlet Collection Manifold, *Journal of Fluids Engineering*, Vol. 129, pp. 579-586, 2007.

4232 29th Ave.
Minneapolis, MN 55406

John P. Abraham

jpabraham@stthomas.edu
612-963-2169

301. J.C.K. Tong, E.M. Sparrow, and J.P. Abraham, Numerical Simulation of the Urine Flow in a Stented Ureter, *Journal of Biomechanical Engineering*, Vol. 129, pp. 187-192, 2007.

2006

302. J.P. Abraham, A Guide to Curing Processes, *Journal of Precision Manufacturing*, 6, pp. 16-17, 2006.

303. J.P. Abraham and C.M. George, Micro-Geothermal Devices for Low-Energy Air-Conditioning in Desert Climates, *GHC Bull.*, Vol. 27, (4), pp. 13-16, 2006.

304. P.W. Chevalier, J.P. Abraham, and E.M. Sparrow, The Design of Cold Plates for the Thermal Management of Electronic Equipment, *Journal of Heat Transfer Engineering*, Vol. 27, pp. 6-16, 2006.

2005

305. E. M. Sparrow and J. P. Abraham, Universal Solutions for the Streamwise Variation of the Temperature of a Moving Sheet in the Presence of a Moving Fluid, *International Journal of Heat and Mass Transfer*, Vol. 48, pp. 3047-3056, 2005.

306. E.M. Sparrow, J.P. Abraham, P.W. Chevalier, A DOS-Enhanced Numerical Simulation of Heat Transfer and Fluid Flow Through an Array of Offset Fins with Conjugate Heating in the Bounding Solid, *Journal of Heat Transfer*, Vol. 127, pp. 27-33, 2005.

307. J. P. Abraham and E. M. Sparrow, Friction Drag Resulting From the Simultaneous Imposed Motion of a Freestream and its Bounding Surface, *International Journal of Heat and Fluid Flow*, Vol. 26, pp. 289-295, 2005.

308. S.K. S. Boetcher, E.M. Sparrow, and J.P. Abraham, Numerical Simulation of the Radiative Heating of a Moving Sheet, *Numerical Heat Transfer*, Vol. 47, pp. 1-25, 2005.

2004

309. E.M. Sparrow, J.P. Abraham, and J.C. K. Tong, Archival Correlations for Average Heat Transfer Coefficients for Non-Circular and Circular Cylinders and for Spheres in Crossflow, *International Journal of Heat and Mass Transfer*, Vol. 47 (24), pp. 5285-5296, 2004.

310. J.P. Abraham and E.M. Sparrow, A Simple Model and Validating Experiments for Predicting the Heat Transfer to a Load Situated in an Electrically Heated Oven, *Journal of Food Engineering*, Vol. 62 (4) pp. 409-415, 2004.

311. J.P. Abraham, Teaching Case Studies to a Multi-Disciplinary Class - Bridging the Gap Between Engineering and the Biological Sciences, *Journal of College Science Teaching*, Vol. 33 (5), March/April 2004.

4232 29th Ave. **John P. Abraham** jpabraham@stthomas.edu
Minneapolis, MN 55406 612-963-2169

2003

312. E.M. Sparrow and J.P. Abraham, A Computational Analysis of the Radiative and Convective Processes Which Take Place in Preheated and Non-Preheated Ovens, *Journal of Heat Transfer Engineering*, Vol. 24, No. 5, pp. 25-37, 2003.

313. J.P. Abraham and E.M. Sparrow, Three Dimensional Laminar and Turbulent Natural Convection in a Continuously/Discretely Wall-Heated Enclosure Containing a Thermal Load, *Numerical Heat Transfer, A,* Vol. 44, pp. 105-125, 2003.

314. E. M. Sparrow and J. P. Abraham, A New Buoyancy Model Replacing the Standard Pseudo-Density Difference for Internal Natural Convection in Gases, *International Journal of Heat and Mass Transfer*, Vol. 46, pp. 3583-3591, 2003.

2002

315. J.P. Abraham and E.M. Sparrow, Experiments on discretely heated, vented/unvented enclosures for various radiation surface characteristics of the thermal load, enclosure temperature sensor, and enclosure walls*, International Journal of Heat and Mass Transfer*, Vol. 45, pp. 2255-2263, 2002.

316. J.P. Abraham and E.M. Sparrow, Fluid Flow and Heat Transfer in Multiply-Folded, Continuous Flow Passages Including Conjugate Thermal Interaction Between the Fluid and Bounding Walls, *Numerical Heat Transfer, A*, Vol. 42, pp. 327-344, 2002.

317. E.M. Sparrow, J.P. Abraham, and Molly K. Rolfsmeier, Fabric Ducts for Air Distribution and for Décor, *Fabric Architecture*, March/April 2002.

318. E.M. Sparrow and J.P. Abraham, Heat Transfer Coefficients and Other Performance Parameters for Variously Positioned and Supported Thermal Loads in Ovens With/Without Water-Filled or Empty Blockages, *International Journal of Heat and Mass Transfer*, Vol. 45, pp. 3597-3607, 2002.

2001

319. E.M. Sparrow, J.C.K. Tong, and J.P. Abraham, An Experimental Investigation on a Mass Exchanger for Transferring Water Vapor and Inhibiting the Transfer of Other Gases*, International Journal of Heat and Mass Transfer*, Vol. 44, pp. 4313-4321, 2001.

320. E.M. Sparrow, G.L. Martin, J.P. Abraham, and J.C.K. Tong, Air-to-Air Energy Exchanger Test Facility for Mass and Energy Transfer Performance, *Transactions of the ASHRAE*, Vol. 107, (2) 2001.

Conference Presentations and Public Lectures (148 presentations)

1. H. Zheng, L. Cheng, and J.P. Abraham, Sea Level Budget in Light of Recent Observational Advances Since 1960, EGU General Assembly, Vienna, Austria, April 27-May 2, 2025.

4232 29th Ave.
Minneapolis, MN 55406

John P. Abraham

jpabraham@stthomas.edu
612-963-2169

2. E. Wells, B.D. Plourde, J. Lyons, J.P. Abraham, G. Pauly, G. Riche, L. Purdum, C. Armstrong, K. Rice, T. Decker, K. Nowlan, M. Story, T. Solider Wolf, Electrification and Job Development for Rural Applications in the USA: Case Study – Wind River Reservation: Impacts on Tribal Capacity, Resiliency, Access to Power, and Jobs, *Microgrid Global Innovation Forum*, San Francisco, September 24-25, 2024.

3. J.P. Abraham, Heat Transfer in Forensics, VCU Forensics Seminar, December 6, 2022.

4. L. Cheng, and J.P. Abraham, Perspectives on Ocean sand Their Role in the Global Energy Budget and Water Cycle, *American Meteorological Society 102nd Annual Meeting, Houston, Kevin Trenberth Symposium,* January 23-27, 2022 (invited).

5. L. E. Olsen and J.P. Abraham, New correlations for convective coefficients over square and cubical bodies, *48th National Conference on fluid mechanics and fluid power,* December 27-29, 2021.

6. D. Vishwakarma, S. Bhattacharyya, M. Soni and J.P. Abraham, Effect of Inlet Flat Obstruction on Thermohydraulic Characteristics in a Smooth Circular Tube in the Transition Flow Regime, *48th National Conference on fluid mechanics and fluid power,* December 27-29, 2021.

7. J.P. Abraham, Introduction to the Computational Tools Available in Fluid Mechanics and Heat Transfer Research, *National Workshop on Research Methodology in Fluid Mechanics,* Pilani, India, June 7-9, 2021.

8. L. Cheng, K. Trenberth, N. Gruber, M.E. Mann, J.P. Abraham, and J. Fasullo, Improved Estimates of Changes in Upper Ocean Salinity and Water Cycle, *AGU Fall Meeting*, 2020.

9. J.P. Abraham, The Science of Global Warming – What do we really know? *Presented at New Mexico Tech. Lecture Series*, September 24, 2020.

10. L. Cheng, K. Trenberth, K. von Schuckmann, J.P. Abraham, V. Gouretski, Oceanic Responses to the Climate: Recognizing Changes and Extremes, *AAAS Annual Meeting*, February 11, 2021.

11. J.P. Abraham, Advanced Methods in Thermal Engineering, *International Workshop on Recent Advances in Thermal Engineering*, India, June 29-July 3, 2020.

12. J.P. Abraham, L. Cheng, Kevin Trenberth – A Life of Research and Impact, *Trenberth Symposium*, Denver, CO, March 16, 2020.

13. J.P. Abraham, Modern Climate Change, *Threats to the Worlds Oceans – World Ocean Day*, Minneapolis, MN June 8, 2020.

4232 29th Ave.
Minneapolis, MN 55406

John P. Abraham

jpabraham@stthomas.edu
612-963-2169

14. L. Cheng, K.E. Trenberth, N. Gruber, M.E. Mann, J.P. Abraham, J. Fasullo, G. Li, X. Zhao, and J. Zhu, Ocean Subsurface Salinity Changes Yield an Anthropogenic Climate Change Signal, *Ocean Sciences 2020*, San Diego, CA, February 16-21, 2020.

15. J.P. Abraham, Climate Science, Projections for the Next Two Decades, *Code Blue, Health Care Professionals for a Healthy Climate*, Minneapolis, MN, April 4, 2020.

16. L. Cheng, G. Foster, Z. Hausfather, K.E. Trenberth, J.P. Abraham, Increase in the Rate of Ocean Warming, *2019 AGU Fall Meeting*, San Francisco, December, 9-13, 2019.

17. J.P. Abraham, G. Foster, Z. Hausfather, L. Cheng, K.E. Trenberth, Earth's Energy Imbalance and Energy Flows Through the Climate System, *2019 AGU Fall Meeting*, San Francisco, December, 9-13, 2019.

18. L. E. Olsen and J.P. Abraham, Evaluation of CFD algorithms for solving a canonical problem of flow over a square cylinder, *4th Thermal and Fluids Engineering Conference*, Las Vegas, April 14-17, 2019.

19. S. A. Mandia, J.P. Abraham, M. Ashley, and J.W. Dash, The Climate Rapid Response Team – An Effective Model for Engaging Media and Policymakers, *2018 AGU Fall Meeting*, Washington, DC, December 2018.

20. J.P. Abraham, Climate Change, the Evidence is in the Oceans, *Presented at the National Laboratory for Marine Science and Technology*, Qingdao, China, October 25, 2018.

21. J.P. Abraham, Progress in XBT simulations, *Presented at the Institute of Atmospheric Physics*, Beijing, October 23, 2018.

22. J.P. Abraham, B.D. Plourde, J.R. Stark, Modeling Hemodynamics Through Lesions *Cardiovascular Research Technologies Conference 18*, Washington DC., March 3-6, 2018.

23. G. Wang, L. Cheng, J.P. Abraham, C. Li, and H. Du, Consensuses and discrepancies of basin-scale ocean heat content changes in different ocean analysis, *AOGS 15th Annual Meeting*, June 3-8, Hawaii, USA, 2018.

24. K.E. Trenberth, L. Cheng, P. Jacobs, and J.P. Abraham, Are recent hurricane (Harvey, Irma, and Maria) disasters Natural? *AGU Fall 2017 Meeting*, New Orleans, December 11-15, 2017.

25. P. Jacobs, S. Akella, K.E. Trenberth, L. Cheng, and J.P. Abraham, The Historical Context of the 2017 Hurricane Season's Ocean Warmth, *AGU Fall 2017 Meeting*, New Orleans, December 11-15, 2017.

4232 29th Ave.
Minneapolis, MN 55406

John P. Abraham

jpabraham@stthomas.edu
612-963-2169

26. J.P. Abraham, P. Jacobs, L. Cheng, K.E. Trenberth, Are recent hurricane (Harvey, Irma, and Maria) disasters Natural? *AGU Fall 2017 Meeting*, New Orleans, December 11-15, 2017.

27. J.P. Abraham and B.D. Plourde, Using ANSYS for Multiphysics Design of a Water Treatment System, *ANSYS Innovation Conference 2017*, Minneapolis, MN, November 8, 2017.

28. J.P. Abraham, L.J. Cheng, K.E. Trenberth, Improved Estimates of Ocean Heat Content from 19602015, *NOAA Presentation*, Washington DC, June 22, 2017.

29. J.P. Abraham, Use of Computational Fluid Dynamics to Improve Oceanographic Measurements, *NOAA Presentation*, Washington DC, January 12, 2017.

30. J.P. Abraham, B.D. Plourde, Use of Multi-lumen Catheters to Preserve Injected Stem Cell Viability, *Cardiovascular Research Technologies Conference 17*, Washington DC., February 18-21, 2017.

31. L. Cheng, J. Zhu, K. Trenberth, J. Fasullo, M. Palmer, T. Boyer, J. Abraham, Improved Ocean Heat Content Estimation Since 1960, *AGU Fall Meeting 2016*, San Francisco, CA, 2016.

32. J.P. Abraham, B. D. Plourde, John Stark, L.J. Vallez, Using ANSYS to Reduce Costs and Speed Development Process, *ANSYS Upper Midwest Innovation Conference*, Bloomington, Minnesota, November 17, 2016 (Keynote).

33. N. Langat, T. Thoruwa, J. Abraham, J. Wanyoko, Performance of an Improved Fluidized System for Processing Green Tea, *ICEE 18th International Conference on Energy Engineerin*g, Toronto, Canada, 2016.

34. L. Cheng, R. Cowley. J.P. Abraham, Cold Water Biases in XBT Descent, *5th XBT Science Workshop*, Tokyo, Japan, October 3-7, 2016 (Invited).

35. L. Cheng, K. Trenberth, M. Palmer, J.P. Abraham, Historical Ocean Heat Content Estimation and the Implications for Assessing Historical Earth's Energy Budget, *Clivar 2016*, Qingdao, China, 2016.

36. R. Cowley, J.P. Abraham, L. Cheng, The Effect of Water Temperature on XBT Fall Rate, *Clivar Third IQuOD Workshop,* Hamburg, Germany, December 3-4, 2015.

37. R. Cowley, L. Cheng, G. Goni, T. Boyer, J.P. Abraham, S. Wijffels, V. Gouretski, F. Reseghetti, S. Kizu, S. Dong, F. Bringas, M. Goes, L. Houpert, J. Sprintall, J. Zhu, Towards Reducing Uncertainty in Historical XBT Data: An International Effort from the XBT Science Team, *2016 Ocean Sciences Meeting*, New Orleans, LA, February 21-26, 2016.

4232 29th Ave.
Minneapolis, MN 55406

John P. Abraham

jpabraham@stthomas.edu
612-963-2169

38. J.P. Abraham and B.D. Plourde, Novel Cost-Effective Solution for Potable Water in All Environments, *The Food-Energy-Water Nexus, 16th National Conference and Global Forum on Science, Policy, and the Environment*, Washington DC, January 18-21, 2016.

39. J.P. Abraham and B.D. Plourde, Off-Grid Wind Power Systems for the Developing World, *The Food-Energy-Water Nexus, 16th National Conference and Global Forum on Science, Policy, and the Environment*, Washington DC, January 18-21, 2016.

40. L.Cheng, J. Zhu, J.P. Abraham, An Updated Historical (1970-2014) Upper OHC Estimates and Implication for the Global Energy Budget, *Climate and Ocean Variability and Change (CLIVAR) 8th Session of the Global Synthesis*, Exeter, UK, September 28, 2015.

41. J.P. Abraham, Our Changing Climate, *Citizens Climate Lobby Conference*, Red Wing, MN, November 6, 2015.

42. J.P. Abraham, J.R. Stark, Advances in XBT Measurement and Bias Reduction, *Chinese Academy of Sciences*, Beijing, October 10, 2015.

43. G. Foster and J.P. Abraham, Lack of Evidence for a Slowdown in Global Temperature, *American Geophysical Union Fall Meeting*, San Francisco, CA, December 14-18, 2015.

44. L. Cheng, J. Zhu, and J.P. Abraham, An Updated Estimate on Global Upper Ocean Heat Content Change and the Remaining Challenges, *American Geophysical Union Fall Meeting*, San Francisco, CA, December 14-18, 2015.

45. G. Foster and J.P. Abraham, Lack of Evidence for a Slowdown in Global Temperature, *US Climate Variability and Predictability Program (CLIVAR) Summit*, Tucson, AZ, August 4-6, 2015.

46. J.P. Abraham, Small-scale Wind Turbines: Design, Analysis and Applications, *Hong Kong University*, January 28, 2015 (invited).

47. J.P. Abraham, The Science of Climate Change, What Do We Really Know, *Hong Kong University of Science and Technolog*y, January 26, 2015 (invited).

48. J.P. Abraham et al., A Novel Multi Lumen Compliant Balloon Catheter (ND® Infusion Catheter) Preserves Stem Cell Viability and Improves Dispersion When Compared to a Standard Single Lumen Balloon Angioplasty Catheter, *European Society of Cardiology*, 2015, (submitted).

49. J.P. Abraham, T.M. Shepard, W.J. Minkowycz, J.R. Stark, J. M. Gorman, Quantification of Near-Surface Impact Forces on XBTs, *The 4th XBT Workshop: XBT Science and the Way Forward,* Beijing, China, November 11-13, 2014.

4232 29th Ave.
Minneapolis, MN 55406

John P. Abraham

jpabraham@stthomas.edu
612-963-2169

50. J.P. Abraham, B.D. Plourde, S.A. Mandia, and K.E. Trenberth, Closing the Earth Energy Imbalance, *3rd International Conference on Earth Science and Climate Change,* San Francisco, CA, July 28-30, 2014.

51. J.P. Abraham, B.D. Plourde, J.R. Stark, and W.J. Minkowycz, Improvements to the Quality and Quantity of Ocean Heat Content Measurements, *3rd International Conference on Earth Science and Climate Change,* San Francisco, CA, July 28-30, 2014.

52. J.P. Abraham, B.D. Plourde, J.R. Stark, W.J. Minkowycz, Cryosurgical Treatment of Cancer: The Importance of Modeling, *4th World Congress on Cancer Science and Therapy*, Chicago, October 20-22, 2014.

53. N. Dib, J.P. Abraham, B. D. Plourde, D.B. Schwalbach, D. Dana, L. Myers, K. Hunkler, T. Flower, and R.E. Kohler, A Novel Multi-lumen Compliant Balloon Catheter Preserves Stem Cell Viability and Decreases Cellular Clumping When Compared to a Standard Single-lumen Balloon Angioplasty Catheter, *Transcatheter Cardiovascular Therapeutics (TCT 2014)*, Washington, DC, September 13-17, 2014.

54. N. Dib, J.P. Abraham, B. D. Plourde, D.B. Schwalbach, D. Dana, L. Myers, K. Hunkler, T. Flower, and R.E. Kohler, A Novel Multi-lumen Compliant Balloon Catheter Preserves Stem Cell Viability and Decreases Cellular Clumping When Compared to a Standard Single-lumen Balloon Angioplasty Catheter, *Complex Cardiovascular Therapeutics*, Orlando, FL, June 23-27, 2014.

55. J.P. Abraham, The Science of Climate Change (Keynote*), 2014 Summer Institute for Climate Change and Energy Education*, Sandstone, MN, August 4-6, 2014.

56. J.P. Abraham, D. B. Schwalbach, T. M. Shepard, J. M. Gorman, Calculating forces of impact as objects travel from air into water at high velocity, *ANSYS Regional Conference*, Minneapolis, MN, June 10, 2014.

57. B.D. Plourde, D.B. Schwalbach, J.P. Abraham, R.E. Kohler, and N.N. Johnson, Intracoronary Injection of Medication from multi-lumen injection Catheters, *Design of Medical Devices 2014*, April 7-14, Minneapolis, MN.

58. N. Dib, J. Abraham, B.D. Plourde, D.S. Schwalbach, D. Dana, D. Lester, T. Flowers, and R.E. Kohler, Comparison of the Stem Cell Viability and Shear Stress of Single Lumen and Multi Lumen Balloon Infusion Catheter for Intra-Arterial Stem Cell Infusion, *American Cardiology Conference 2014*, Washington, DC, March 29-31.

59. J.P. Abraham, The Science of Global Warming, What Do We Really Know (Keynote)*, Audubon Society National Meeting*, October 6, 2013.

60. J.P. Abraham, Thawing Out Climate Science, IEEE 2013 Awards Banquet, St. Paul, MN, February 23, 2013.

4232 29th Ave.
Minneapolis, MN 55406

John P. Abraham

jpabraham@stthomas.edu
612-963-2169

61. J.P. Abraham, Using ANSYS to Model Rotating Oceanographic Devices, *ANSYS Regional Conference*, Minneapolis, June 6, 2013.

62. N. Dib, J.P. Abraham, B. Plourde, D. Schwalbach, D. Dana, L. Myers, T. Flowers, and R. Kohler, Stem Cell Viability Significantly Reduced After Passing Through a Standard Single Lumen Over-the-wire 0.014 inch Balloon Angioplasty Catheter, *TCT 2013 Conference*, October 27-November 1, 2013, San Francisco, CA.

63. J.P. Abraham, Measurements of the Earth's Climate System, *IEEE Conference on Instrumentation and Measurement Technology Conference*, Minneapolis, MN, May 6, 2013.

64. J.P. Abraham, Numerical Simulations of Drug Deposition of Paclitaxel, *Design of Medical Devices Conference*, 2013, Minneapolis, MN, April 8-11, 2013.

65. J.P. Abraham, J. Stark, J. Gorman, E. Sparrow, R. Kohler, A Model of Drug Deposition Within Artery Walls, *Design of Medical Devices Conference*, 2013, Minneapolis, MN, April 8-11, 2013.

66. J.L. Conroy, S.A. Mandia, J.P. Abraham, S.E. Moffitt, G. Tootle, Environmental Litigation and the Role of Climate Scientists, *AGU Winter Meeting 2012*, December 3-7, San Francisco, 2012.

67. S.A. Mandia, J. Abraham, J. Dash, M. Ashley, Filling the Knowledge Gap that Exists Between the Public and Its Leaders and Climate Science Experts, *AGU Winter Meeting 2012*, December 3-7, San Francisco, 2012.

68. S.A. Mandia, J.P. Abraham, J. Dash, and M. Ashley, Navigating Negative Conversations in Climate Change, *AGU Winter Meeting 2012*, December 3-7, San Francisco, 2012.

69. M.J. Kallock, A. Yevzlin, M. Nelson, and J.P. Abraham, Numerical Modeling of Blood Flow in a New Percutaneously Delivered Hemodialysis Shunt, *BMES 2012 Annual Meeting*, Atlanta Georgia, October 24-27, 2012.

70. J.P. Abraham, Understanding Climate Change's Common Myths, *Minnesota Broadcast Meteorologists Climate Change Science Seminar*, St. Paul, MN, October 5-6, 2012.

71. N.P. Sullivan, J.E. Wentz, J.P. Abraham, Multi-Scale Modeling of Tubular Cross-Flow Microfiltration of Metalworking Fluids, *ASME International Mechanical Engineering Congress and Exposition*, Houston, TX, November 9-15, 2012.

72. J.P. Abraham, M. Nelson, J. Jeske, J. Gorman, Simulation Tools for Design and Testing Substitution in Medical Devices, *Lifescience Alley Research Conference, Research and Development 101*, Minneapolis, MN, May 22, 2012.

4232 29th Ave.
Minneapolis, MN 55406

John P. Abraham

jpabraham@stthomas.edu
612-963-2169

73. M.J. Kallock, M. E. Nelson, J. P. Abraham, and A. S. Yevzlin, Fluid Mechanic Modeling of a Percutaneously Delivered Vascular Access Device, *American Society of Diagnostic and Interventional Nephrology, 8th Annual Meeting,* New Orleans, LA, February 24-26, 2012.

74. D. Dana, J.P. Abraham, R. Kohler, A. Campbell, B. Baird, M. Olson, and N. Dib, A Novel Catheter Delivery System (CardioDib) That May Enable Intracoronary Stem Cell Infusion by Possibly Minimizing Cellular Clumping and Distal Embolization (DE) While Preserving Cellular Viability, *9th International Symposium on Stem Cell Therapy and Cardiovascular Innovations*, Madrid, Spain, June 7-8, 2012.

75. K.E. Trenberth, K. Emanuel, J.P. Abraham, Climate Science and Meteorology, *AMS National Broadcast Meteorology Conference*, Boston, MA, August 24, 2012

76. J.P. Abraham, J. Jeske, and M. Nelson, Thermal and Fluid Flow Simulations in Health Care: Product Development and Safety Improvement, *Design of Medical Devices Conference*, Minneapolis, MN April 10-12, 2012.

77. J.P. Abraham, Climate Myths, Misconceptions, and Their Creators, American Chemical Society, St. Paul, MN, November 13, 2012.

78. I. Enting, J.P. Abraham, Detailed Debunking of Denial, *AGU Winter Meeting 2012*, December 3-7, San Francisco, 2012.

79. B.D. Plourde, J.P. Abraham, G.S. Mowry, E.M. Sparrow, Experimental Test of Multi-Stage Vertical-Axis Turbines for Cellular Communication Applications, *ASME 6th International Conference on Energy Sustainability*, San Diego, CA, July 23-26, 2012.

80. M.N. Nelson and J.P. Abraham, Hemodynamics of AV Grafts for Hemodialysis Access, *Design of Medical Devices Conference*, Minneapolis, MN April 10-12, 2012.

81. J.P. Abraham and J.S. Jeske, Cryosurgical Simulations for Ablation of Kidney Tumors, *Design of Medical Devices Conference*, Minneapolis, MN April 10-12, 2012.

82. J.P. Abraham, J.R. Stark, and J.M. Gorman, Drag Calculations on Oceanographic Devices, *ANSYS Regional Conference,* Minneapolis, MN, October 20, 2011.

83. J.P. Abraham, B.D. Plourde, and G.S. Mowry, Fluid Dynamic Simulations of Wind Turbines, *ANSYS Regional Conference,* Minneapolis, MN, October 20, 2011.

84. S.A. Mandia, J.P. Abraham, R. Weymann, and M. Ashley, The Climate Science Rapid Response Team – A Model for Science Communication, *Geological Society of America Annual Meeting and Exposition,* Minneapolis, MN, October 9-12, 2011.

4232 29th Ave.
Minneapolis, MN 55406

John P. Abraham

jpabraham@stthomas.edu
612-963-2169

85. S.A. Mandia, J.P. Abraham, R.J. Weymann, and M. Ashley, The Climate Sciences Rapid Response Team – A Model for Science Communication, *American Geophysical Union Fall Meeting*, San Francisco, CA December 5-9, 2011.

86. J.P. Abraham, J. Stark, J. Gorman, F. Reseghetti, J. Willis, and J. Lyman, Preliminary Fluid Drag Calculations for Expendable Bathythermograph Devices, *American Geophysical Union Fall Meeting*, San Francisco, CA December 5-9, 2011.

87. S.A. Mandia, J.P. Abraham, R.A. Weymann, and M. Ashley, Scientists Shaping the Discussion, *American Geophysical Union Fall Meeting*, San Francisco, CA December 5-9, 2011.

88. J.P. Abraham, J.R. Stark, J.M. Gorman, F. Reseghetti, J. Willis, and J. Lyman, Computational Modeling of Probe Dynamics to Improve Ocean Heat Content Measurements, *American Geophysical Union Fall Meeting*, San Francisco, CA December 5-9, 2011.

89. B.M. Osende, J.P. Abraham, and G.S. Mowry, The Design, Installation, and Maintenance of a Village-Sized Solar Power System in Uganda, *Nanotech, Cleantech, Microtech 2011 Conference*, June 13-16, 2011, Boston, MA. Published in the Technical Proceedings of the 2011 NSTI Nanotechnology Conference and Expo, Vol. 3, pp. 755-758, 2011.

90. J.M. Gorman, E.M. Sparrow, G.S. Mowry, and J.P. Abraham, Simulation of Helically Wrapped, Compact Heat Exchangers, ASME 2011 Energy Sustainability *Conference*, Washington, DC, August 7-10, 2011.

91. B.D. Plourde, J.P. Abraham, G.S. Mowry, and W.J. Minkowycz, Vertical-Axis Wind Turbines for Powering Cellular Communication Towers, *Nanotech, Cleantech, Microtech 2011 Conference*, June 13-16, 2011, Boston, MA. *Published in the Technical Proceedings of the 2011 NSTI Nanotechnology Conference and Expo*, Vol. 3, pp. 750-753, 2011.

92. L. Tran, M.P. Hennessey, and J.P. Abraham, Simulation and Visualization of Dynamic Systems: Several Approaches and Comparisons, *ASME International Mechanical Engineering Congress and Expo*, Vancouver, Canada, November 12-18, 2011.

93. J.P. Abraham, Global Warming, What does the Science Tell Us?, *7th Annual Environmental Institute Conference* (KEYNOTE), Minneapolis, MN, April 21, 2010.

94. J.P. Abraham, G.S. Mowry, B.D. Plourde, and W.J. Minkowycz, Numerical Simulations of Vertical-Axis Wind Turbine Blades, *ASME 2011 Energy Sustainability Conference and Fuel Cell Conference*, Washington, DC, August 7-10, 2011.

4232 29th Ave.
Minneapolis, MN 55406

John P. Abraham

jpabraham@stthomas.edu
612-963-2169

95. J.P. Abraham, G.S. Mowry, B.D. Plourde, and W.J. Minkowycz, Wind Tunnel Tests of Vertical-Axis Wind Turbine Blades, *ASME 2011 Energy Sustainability Conference and Fuel Cell Conference*, Washington, DC, August 7-10, 2011.

96. R.D. Lovik, E.M. Sparrow, J.P. Abraham, C.L. Zelmer, S.K.S. Friend, and D.K. Smith, Effect of Component Misalignment on Human Tissue Temperatures Associated with Recharging Neuromodulation Devices, *Design of Medical Devices Conference*, Minneapolis, MN April 12-14, 2011.

97. N.N. Johnson, K. L. McCaffrey, K.M. Rose, and J.P. Abraham, Cryosurgical Treatments for Uterine Fibroids, *ASME 2010 International Congress and Expo*, Vancouver, CA, November 12-18, 2010.

98. R.D. Lovik, K. J. Kelly, E.M. Sparrow, and J.P. Abraham, Effect of Misalignment of Implant and Antenna on Heat Generation of Externally Recharged Neuromodulation Implants, *North American Neuromodulation Society 14th Annual Meeting*, Las Vegas, NV, December 2-5, 2010.

99. J.P. Abraham and S. Mandia, An Emerging Ethic of Responsibility: A Case Study for Engaging the Public, *American Geophysical Union Fall Meeting*, San Francisco, CA December 13-17, 2010.

100. J.P. Abraham and G.S. Mowry, B.D. Plourde, Analysis of Thermal and Fluid Flow Problems, *Thermal Packaging and Small Business Innovation Workshop*, Eagan, MN, October 5-6, 2010.

101. N.N. Johnson, J.P. Abraham, Z.I. Helgeson, and M.P. Hennessey, Numerical Simulation of Blood Flow in the Presence of Embolizing Agents, *ASME 2010 International Congress and Expo*, Vancouver, CA, November 12-18, 2010.

102. N.N. Johnson, J.P. Abraham, and Z.I. Helgeson, Calculations of Scald Burns: Effects of Water Temperature, Exposure Duration, and Clothing, *ASME 2010 International Congress and Expo*, Vancouver, CA, November 12-18, 2010.

103. N.N. Johnson, M.P. Hennessey, and J.P. Abraham, Swept Arc Length Measure of Abrasive Wear, *ASME 2010 International Congress and Expo*, Vancouver, CA, November 12-18, 2010.

104. K.L. McCaffrey, K.M. Rose, and J.P. Abraham, Numerical Simulation of Cryosurgery as a Potential Treatment for Uterine Fibroids, *14th International Heat Transfer Conference*, Washington, D.C., August 8-13, 2010.

105. J.P. Abraham, E.M. Sparrow, J.C.K. Tong, and W.J. Minkowycz, Intermittent Flow Modeling. Part 1: Hydrodynamic and thermal Modeling of Steady, Intermittent Flows in Constant Area Ducts, *14th International Heat Transfer Conference*, Washington, D.C., August 8-13, 2010.

4232 29th Ave.
Minneapolis, MN 55406

John P. Abraham

jpabraham@stthomas.edu
612-963-2169

106. J.P. Abraham, E.M. Sparrow, J.C.K. Tong, and W.J. Minkowycz, Intermittent Flow Modeling. Part 2: Time-Varying Flows and Flows in Variable Area Ducts, *14th International Heat Transfer Conference*, Washington, D.C., August 8-13, 2010.

107. K.L. McCaffrey, K.M. Rose, and J.P. Abraham, Cryosurgery as an Alternative Treatment for Menorrhagia and Uterine Fibroids, *ASME Summer Biomedical Engineering Conference*, Naples, FL, June 16-19, 2010.

108. J.M. Gorman, N.K. Sherrill, J.P. Abraham, Analysis of Drag-Reducing Techniques for Olympic Skeleton Helmets, *ANSYS Users Conference*, Minneapolis, MN, June 11, 2010.

109. B. D. Plourde, J.P. Abraham, G.S. Mowry, Numerical Simulation of Vertical Axis Wind Turbines, *ANSYS Users Conference*, Minneapolis, MN, June 11, 2010.

110. J.P. Abraham, Z.I. Helgeson, N.N. Johnson, G.S. Mowry, Numerical Simulations and Medical Device Design, *ANSYS Users Conference*, Minneapolis, MN, June 11, 2010.

111. J.M. Gorman, N.K. Sherrill, J.P. Abraham, Drag-Reducing Vortex Generators and Olympic Skeleton Helmet Design, *ANSYS Users Conference*, Chicago, IL, June 7, 2010.

112. J.P. Abraham, Z.I. Helgeson, N.N. Johnson, G.S. Mowry, (Keynote), Numerical Simulations in Biomedical Design, *ANSYS Users Conference*, Chicago, IL, June 7, 2010.

113. J.P. Abraham, E.M. Sparrow, Y. Bayazit, R.D. Lovik, and D.S. Smith, Numerical and Experimental Simulations as Symbiotic Tools for Solving Complex Bio-Thermal Problems, *Design of Medical Devices Conference*, Minneapolis, MN April 13-15, 2010.

114. E.M. Sparrow and J.P. Abraham, Numerical Solutions of Biological Heat Transfer, *Design of Medical Devices Conference*, Minneapolis, MN April 13-15, 2010.

115. J.P. Abraham, R.D. Lovik, D.S. Smith, E.M. Sparrow, and K.J. Kelly, Heat Generation Measurements of Revised Neuromodulation Devices and Calculations of Tissue Temperatures, *North American Neuromodulation Society 13th Annual Meeting*, Las Vegas, December 3-6, 2009.

116. J.P. Abraham and E.M. Sparrow, Numerical Simulation as a Tool for Assessing Thermal- and Fluid-Based Processes and Therapies, *Institute for Engineering in Medicine Innovation Showcase*, Minneapolis, MN, September 22, 2009.

117. J.P. Abraham, E.M. Sparrow, and R.D. Lovik, An Investigation of Tissue-Temperature Elevation Caused by Recharging of Transcutaneous Neuromodulation Devices, *31st Annual International Conference of the IEEE Engineering in Medicine in Biology Society*, Minneapolis, MN, September 2-7, 2009.

4232 29th Ave.
Minneapolis, MN 55406

John P. Abraham

jpabraham@stthomas.edu
612-963-2169

118. R.D. Lovik, J.P. Abraham, and E.P. Sparrow, Pulsating Fluid Flows Undergoing Transitions Between Laminar, Transitional, and Turbulent Regimes, *ASME 2009 Summer Bioengineering Conference*, Lake Tahoe, CA, June 17-21, 2009.

119. E.M. Sparrow, and J.P. Abraham, Case Studies on the Use of Numerical Simulation for design and Optimization of Medical Devices*, Design of Medical Devices Conference*, Minneapolis, MN April 14-16, 2009.

120. F. Hoover and J. Abraham Assessment of the Carbon Dioxide and Energy Balances of Biofuels, *Climate Change Technology Conference 2009*, Hamilton, Ontario, May 12-15, 2009.

121. J.P. Abraham, G.S. Mowry, and R.E. Erickson, Design and Analysis of a Small-Scale Vertical-Axis Wind Turbine for Rooftop Power Generation, *Climate Change Technology Conference 2009*, Hamilton, Ontario, May 12-15, 2009.

122. F. Hoover and J.P. Abraham, A review: Comprehensive Comparison of Corn-based and Cellulosic-based Ethanol as Biofuel Sources, *Clean Technology Conference and Expo 2009*, Houston, TX, May 3-7, 2009.

123. J.P. Abraham, G.S. Mowry, and R.E. Erickson, Design and Analysis of a Small-Scale Vertical-Axis Wind Turbine, Clean *Technology Conference and Expo 2009*, Houston, TX, May 3-7, 2009.

124. J.P. Abraham, R.D. Lovik, and E.M. Sparrow, Tissue Temperature Rises Due to Heat Generation in Neuromodulation Implants, North American Neuromodulation Society 12th Annual Meeting, Las Vegas, December 4-7, 2008.

125. G. Nelson, A. Majewicz, and J.P. Abraham, Numerical Simulation of Thermal Injury to the Artery Wall During Orbital Atherectomy, *ANSYS International*, Pittsburgh, PA, August 26-29, 2008.

126. J.P. Abraham, Integrating Integration of ANSYS/CFX into Classrooms, *ANSYS International*, Pittsburgh, PA, August 26-29, 2008.

127. J.P. Abraham, Pressure Drop and Heat Transfer Calculations for Laminar-Turbulent Intermittent Flows, *ANSYS International*, Pittsburgh, PA, August 26-29, 2008.

128. J.P. Abraham, J.C.K. Tong, and E.M. Sparrow, Prediction of Laminar-Turbulent Transition and Friction Factors in Transitional Flows, *ASME International Congress and Expo*, Boston, MA, October 31 – November 5, 2008.

129. R.D. Lovik, J.P. Abraham, and E.M. Sparrow, Assessment of Possible Thermal Damage of Tissue Due to Atherectomy by Means of a Mechanical Debulking Device, *ASME 2008 Summer Bioengineering Conference*, Marco-Island, FL, June 25-29, 2008.

4232 29th Ave.
Minneapolis, MN 55406

John P. Abraham

jpabraham@stthomas.edu
612-963-2169

130. J.P. Abraham and A.P. Thomas, Numerical Simulation of Induced Co-Flow and Laminar-to-Turbulent Transition Associated with Synthetic Jets, *Flucome 2007*, Tallahassee, FL, September 16-19, 2007.

131. J.P. Abraham and C.M. George, An Investigation of Radiation Shields for Full-Building Cooling in Desert Climates, *Solar 2007*, Cleveland, OH July 7-12, 2007.

132. A. Marchese, J.P. Abraham, C.S. Greene, L. Kizenwether, and J. Ochs, Toward a Common Standard Rubric for Evaluating Capstone Design Projects, *National Capstone Design Course Conference*, Boulder, CO June, 13-15, 2007 (Best Paper Award).

133. John Abraham, Chris Greene, Anthony Marchese, External Assessment Through Peer-to-Peer Evaluation of Capstone Projects, *Frontiers in Education*, Milwaukee, WI, October, 10-13, 2007.

134. John Abraham, Computation Fluid Dynamics Using ANSYS CFX, presented at the University of Minnesota Digital Technology Center, Sept. 12 and 14, 2006.

135. John Abraham, Application of the Finite Element Method, *LifeSciences Conference*, Minneapolis, October 5, 2006.

136. John Kim and John Abraham, Design of Experiments in the Medical Device Industry, *LifeSciences Conference*, Minneapolis, October 5, 2006.

137. Ephraim Sparrow, Nick Whitehead, and John Abraham, Fluid Flow Dynamics in the Urinary Tract – Impact on Device Design, Presented to the Department of Urologic Surgery, April 17, 2006.

138. John Abraham, Nick Whitehead, and Ephraim Sparrow, Numerical Simulation of Thermal Therapies, Presented to the Department of Urologic Surgery, April 17, 2006.

139. John Abraham, Nick Whitehead, and Ephraim Sparrow, Biomedical Applications Simulations/Experimental Investigations, *Biomedical Focus 2006*, Brooklyn Center, MN, March 20-21, 2006.

140. Nick Whitehead, Ephraim Sparrow, and John Abraham, A Role for Engineering in Medical Simulations, *Simulation in Healthcare*, Minneapolis, MN, November 28, 2005.

141. Ronald Major and John Abraham, The Application of Thermal Analysis on a Disk Array, *Fluent's 2005 CFD Summit*, Detroit, MI, June 7-8, 2005.

142. Camille George and John Abraham, A Sustainable Low-Energy Cooling System for Hot Dry Climates, *Sustainability as Security*, Austin, TX, October 5-9, 2005.

4232 29th Ave. **John P. Abraham** jpabraham@stthomas.edu
Minneapolis, MN 55406 612-963-2169

143. John P. Abraham and Ephraim M. Sparrow, Irrelevance of the Relative Velocity as the Characteristic Velocity When Both a Fluid and its Bounding Surface are in Motion, *Lorenz G. Straub Award*, Minneapolis, MN, November 13, 2004.

144. John P. Abraham and Ephraim M. Sparrow, An Unexpected U-Turn After an Eckert Straight Start, *Eckert Symposium*, Minneapolis, MN, September 13-14, 2004.

145. John P. Abraham and Ephraim M. Sparrow, Methodologies to Enhance the Numerical Simulations of Electronic Cooling, *Semi-Therm Conference,* San Jose, CA, March 9-10, 2004.

146. Ephraim M. Sparrow, John P. Abraham, and Paul Chevalier, A DOS-Enhanced Numerical Simulation of Heat Transfer and Fluid Flow Through an Array of Offset Fins with Conjugate Heating in the Bounding Solid, *ASME International Mechanical Engineering Congress and R & D Expo*, Washington, DC, November, 2003.

147. J. P. Abraham, Ephraim M. Sparrow, Student-Related Research "Thermal Design Capstone Projects", *ASME International Mechanical Engineering Congress and R & D Expo*, Washington, DC, November, 2003.

148. Sparrow, E.M., Martin, G.L., Abraham, J.P., and Tong, J.C., Air-to-Air Energy Exchanger Test Facility for Mass and Energy Transfer Performance. *American Society of Heating, Refrigeration, and Air-Conditioning Engineers Annual Meeting*, Inc., Cincinnati, OH, ASHRAE Symposium Paper, 2001.

149. Tamma, K.K., Zhou, X., Abraham, J., and Anderson, C.V.D.R., Constitutive Model Theories and Plausible Propositions/Challenges to Heat Transport Characterization. *ASME/JSME Joint Thermal Engineering Conference*, March, 1999.

Granted Patents (author of 26 patents)

1. Robert Monson and John Abraham, "Dual-phase thermal electricity generator", U.S. Patent # 8,484,974.

2. Robert Monson and John Abraham, "Variable Orifice Valve", U.S. Patent # 7,559,485

3. Robert Monson, John Abraham, Joseph Crimando, Joel Farley, Matthew Linder, and Joel Seipel, "Vehicle Energy Absorption Apparatus", US Patent # 8,118,255.

4. B.D. Plourde and J.P. Abraham, "Rotor Blade for Vertical Axis Wind Turbine", US Patent # 9,482,204/ WO 2011150171.

5. B.D. Plourde, J.P. Abraham, D.R. Plourde, A. Gikling, R. Pakonen, "Dual-Axis Tracking Device", US Patent # 10,168,412.

6. B. D. Plourde, J. P. Abraham, D.R. Plourde, R. Pakonen, "Control Valve Assembly for Fluid Heating System", US Patent # 10,495,720.

4232 29th Ave.
Minneapolis, MN 55406
John P. Abraham
jpabraham@stthomas.edu
612-963-2169

7. B. D. Plourde, J. P. Abraham, D.R. Plourde, R. Pakonen, "Dual Axis Tracking Device", China National Intellectual Property Administration, Patent number ZL201580075224.1, 2020.

8. B.R. Plourde, J. P. Abraham, D.R. Plourde, R. Pakonen, "Dual Axis Tracking Method", U.S. Patent 10,890,645.

9. B.D. Plourde, A. Gikling, J.P. Abraham, R. Pakonen, "Digital Fluid Heating System", U.S. Patent 10,989,420.

10. B.D Plourde, J.P. Abraham, D. Plourde, R. Pakonen, A. Gikling, N. Naughton, "Fluid Heating System", European Patent, EP 3227618.

11. B. D. Plourde, J. P. Abraham, D.R. Plourde, R. Pakonen, "Method of Calculating Pathogen Inactivation for a Fluid Heating System", US Patent, 11,255,804.

12. B.D. Plourde, A. Gikling, J.P. Abraham, R. Pakonen, "Digital Fluid Heating System", China National Intellectual Property Administration, Chinese Application Number 201780083752.0

13. B.D. Plourde, A. Gikling, J.P. Abraham, R. Pakonen, "Digital Fluid Heating System", African Regional Intellectual Property Organization (ARIPO), (patent granted, number forthcoming).

14. B.D. Plourde, A. Gikling, J.P. Abraham, R. Pakonen, "Digital Fluid Heating System", European Union number EP 4,080,134.

15. B.D. Plourde, A. Gikling, J.P. Abraham, R. Pakonen, "Digital Fluid Heating System", European Union number EP3,542,107.

16. B.D. Plourde, A. Gikling, J.P. Abraham, R. Pakonen, "Digital Fluid Heating System", Columbia, Application number NC 2019/00006027, (*number to be issued*).

17. B.D. Plourde, A. Gikling, J.P. Abraham, R. Pakonen, and D. Plourde, Solar Heating for Refrigeration and Fluid Heating Devices, Colombian Application No. 2019/0011368, (number to be issued).

18. B.D. Plourde, A. Gikling, J.P. Abraham R. Pakonen, and D. Plourde, Digital Fluid Heating System, US Patent no. 11,920,801

19. B.D. Plourde, J.P. Abraham, D. Plourde, R. Pakonen, A. Gikling, N. Naughton, "Fluid Heating System", US Patent no. 11,946,886.

20. B.D. Plourde, A. Gikling, J.P. Abraham, R. Pakonen, "Solar Heating for Refrigeration and Fluid Heating Devices", filed March 2018. Brazil Application No. BR1120190190414, (patent number forthcoming).

4232 29th Ave.
Minneapolis, MN 55406

John P. Abraham

jpabraham@stthomas.edu
612-963-2169

21. B.D. Plourde, A. Gikling, J.P. Abraham, R. Pakonen, "Digital Fluid Heating System", filed November 2017. Brazil Application No. BR112019009923-9, (patent number forthcoming).

22. B.D. Plourde, A. Gikling, J.P. Abraham, R. Pakonen, "Fluid Heating System", Peru, Application Number 001011-2019 (patent number forthcoming).

23. B.D. Plourde, A. Gikling, J.P. Abraham, R. Pakonen, "Digital Fluid Heating System", India, Patent no. 478824.

24. B.D. Plourde, A. Gikling, J.P. Abraham, R. Pakonen, "Dual-Axis Tracking Method", India, 522,368, 2024.

25. B.D. Plourde, A. Gikling, J.P. Abraham, R. Pakonen, "Solar Heating for Refrigeration and Fluid Heating Devices", Peru, (patent number forthcoming).

26. B.D. Plourde, A. Gikling, J.P. Abraham, R. Pakonen, "Dual Axis Tracking Device", European Application, No. 15816974.8

Pending Patents

1. B.D. Plourde, J.P. Abraham, "Solar Heating System", US Patent Application No. 62/423,814 (filed November 18, 2016).

2. B.D. Plourde, A. Gikling, J.P. Abraham, R. Pakonen, "Solar Heating for Refrigeration and Fluid Heating Devices", filed March 2018. US Application number 20180266712.

3. B.D. Plourde, A. Gikling, J.P. Abraham, R. Pakonen, "Dual-Axis Tracking Method", US Application number 2019/0107598, filed November 2018.

4. B.D. Plourde, A. Gikling, J.P. Abraham, R. Pakonen, "Digital Fluid Heating System", US Application number 2018/0142905, filed November 2017.

5. B.D. Plourde, A. Gikling, J.P. Abraham, R. Pakonen, "Fluid Heating System", Chinese National Intellectual Property Administration, Application number 2022105305045.8.

6. B.D. Plourde, A. Gikling, J.P. Abraham, R. Pakonen, Fluid Heating System", India, Application number 201737018679.

7. B.D. Plourde, A. Gikling, J.P. Abraham, R. Pakonen, "Digital Fluid Heating System", Brazil, Application number BR112019009923-9.

4232 29th Ave.
Minneapolis, MN 55406

John P. Abraham

jpabraham@stthomas.edu
612-963-2169

Granted Trademarks

1. US Trademark Registration Number 5656322, assignee: WTS LLC, Minnesota, USA. Trademark granted, January 15, 2019.

2. US Trademark Registration Number 5656323, assignee: WTS LLC, Minnesota, USA. Trademark granted, January 15, 2019.

Editorial Board Member

18. International Society of Cardiovascular Translational Research, 2020-present
19. Energies, Thermal Management, 2019-present
20. Cardiovascular Revascularization Medicine, 2018-present
21. Stem Cell Biology and Transplantation, 2015-present
22. Associate Editor, NCSE, Climate Science, 2012-present
23. International Journal of Mechanics and Energy, 2012-present
24. Open Mechanical Engineering Journal, 2007-present
25. Open Mechanical Engineering Reviews, 2007-present
26. Open Mechanical Engineering Letters, 2007-present
27. Open Medical Devices Journal, 2008-present
28. Creative Engineering Journal, 2009-present
29. ISRN Applied Mathematics, 2011-present
30. International Journal of Sustainable Energy, 2012 - present
31. International Journal of Materials, Methods, and Technologies, 2012- present

CONSULTANTSHIPS

GRANTS (funding $24.02 million)

Bold Alliance	**2023-2024**
Varian Medical Systems	**2023**
Flotherm	**2021-2023**
LEMA, LLC, MN	**2016-2023**
HRST, Inc., MN	**2021**
Biotronik	**2021**
Starky	**2020**
Marvin Windows	**2020-2022**
Cardiovascular Systems, Inc.	**2019-2021**
ALS Consulting	**2019**
Medivator, MN	**2018-2019**
Medivators, MN	**2014-2015**
EKOS, MN	**2018**
Marcor	**2018**
Marvin Windows	**2018**
Medtronic, Fridley, MN	**2017-2020**
Orbital ATK	**2017-2018**
Pride Engineering, MN	**2017-2018**
Cargill, MN	**2016-2017**
EKOS, MN	**2016-2017**
Precision Air, MN	**2016**

4232 29th Ave. **John P. Abraham** jpabraham@stthomas.edu
Minneapolis, MN 55406 612-963-2169

3M, MN	**2015-2017**
Flourescence, Inc., MN	**2015**
Smiths Medical, MN	**2014-2015**
WTS LLC, MN	**2014-2022**
Somnetics, MN	**2014**
Lake Region Medical, MN	**2013-2014**
Amphora Medical, MN	**2013-2014**
ALS Consulting, MN	**2013-2016**
Medtronic, Fridley, MN	**2013-2016**
Devicix, MN	**2012-2013**
CriticCare, MN	**2012**
HRST, Inc., MN	**2012-2015**
QIG Group, OH	**2011-2013**
Phraxis, MN	**2011-2012**
Cardiovascular Systems, Inc., Roseville, MN	**2007-2015**
Translational Biologic Infusion, AZ	**2011-2013**
Galil Medical, Roseville, MN	**2011**
Imation, Oakdale, MN	**2010**
Medtronic, Fridley, MN	**2008-2011**
R4 Engineering, India	**2008-2009**
Horizontal Winds,	**2008-2009**
Lockheed Martin, Eagan, MN	**2007-2009**
St. Jude Medical, Minnetonka, MN	**2007-2009**
Arizant Medical, Eden Prairie, MN	**2006**
Johnson and Johnson, Newark, NJ	**2004-2005**
Cortron/XeteX, Fridley, MN	**2005**
MicroControl Company, MN	**circa 2001**
Donaldson Co., Bloomington, MN	**1999-2003**
Augustine Medical, Eden Prairie, MN	**2000-2003**
Midmac Systems Inc., St Paul, MN	**2002**
Remmele Engineering Inc., St Paul, MN	**2002-2005**
Urologix, Minneapolis, MN	**circa 2004**
Restore Medical, Minneapolis, MN	**circa 2002**
Jennio, Minnesota	**circa 2001**
Caterpillar, Minneapolis, MN	**circa 2000**
ADC telecom, Minneapolis, MN	**circa 2000**
Entropy Solutions	**circa 2000**
XeteX, Inc., Minneapolis, MN	**1996-2000**
Pneuseal, St. Paul, MN	**1996-1998**
Los Alamos National Laboratory, Los Alamos, NM	**1994**

GRANTS (funding $24.783 million)

Energetics Technology Center **2025**

$477,000 Funding for development of solar-powered towers with sensors

4232 29th Ave.
Minneapolis, MN 55406

John P. Abraham

jpabraham@stthomas.edu
612-963-2169

Energetics Technology Center **2025**
$50,000 Funding for development of solar-powered towers with sensors

USAID **2024**
$145,900 Funding through USAID's Health Electrification and Telecommunications Alliance (HETA program)

Department of Interior **2024**
$130,000 Funding for electrification of Wind River Reservation

Bold Alliance **2023**
~$12K For research on pollution plumes from a rupture pipeline

Varian Medical Systems, Inc. **2023**
Brain thermal transport, oncology applications

LEMA, LLC **2016-2022**
$20m for development and deployment of solar-power off grid systems.
Part of Consolidated Appropriations Act, 2023

HRST, Inc. **2021**
$34,000 for analysis of flow patterns in power plants

Biotronik **2021**
$44k for simulation of heating caused by implanted medical devices

Flotherm (SBIR award FAIN 2034065) **2020-2023**
$20k for simulation of body-heating devices
$48k for simulation of body-heating devices
SBIR funding, NSF Small Business Innovative Research project

Starky **2019-2020**
$6k for thermal modeling of hearing aid batteries

National Science Foundation (Co-PI, FAIN = 2018403) **2020-2021**
$424k for engineering PIV instrumentation

Intertek **2019-2020**
$13k for study of tissue surrogates for biological heating

Cardiovascular Systems, Inc. **2019-2021**
$13k for thermal model of blower impellor for a dialysis pump
$9k for thermal model of blower impellor for a dialysis pump
$4k for thermal model of blower impellor for a dialysis pump
$20k for flow model of blower impellor for a dialysis pump
$5k for flow model of blower impellor for a dialysis pump

4232 29th Ave.
Minneapolis, MN 55406

John P. Abraham

jpabraham@stthomas.edu
612-963-2169

ALS Consulting **2019**
$15k for thermal model of power plant

Medivators **2019**
$12k for thermal model of thermal sterilization

Marvin Windows **2019-2022**
$4k for thermal analysis of a tiny home
$5k for thermal model of manufacturing line
$4k for thermal model of manufacturing line

Medtronic **2019**
$22k for simulation of tissue temperatures during transcutaneous recharge
$25.5k for simulation of tissue temperatures during transcutaneous recharge

Medivators **2018**
$18k to research airflow in medical sterilization equipment.

Marvin Windows **2018-2020**
$6k to research thermal processes during window ventilation
$4k to research thermal processes of natural lighting
$4k to research thermal processes of natural lighting

Medtronic **2018**
$3k to research battery heating rates
$8k to research thermal tolerance of brain tissue

EKOS **2018**
$14k for analysis of flow distribution within stents

Marcor **2018**
$10k for fluid and heat transfer analysis

Pride Engineering **2017**
$3k to calculate a metal stamping machine process

Orbital ATK **2017-2018**
$30k to simulate fluid flow
$12k to simulate fluid flow

Medtronic **2017**
$5k to research thermal tolerance of brain tissue
$14k to calculate cranial temperature increases during transcranial recharge

3M **2017**
$14k to simulate airflow in ultra-clean operating rooms.

4232 29th Ave.
Minneapolis, MN 55406

John P. Abraham

jpabraham@stthomas.edu
612-963-2169

Zoll Engineering **2017**
$5.5k for design of flow through a ventilation medical device

Cargill **2016-2017**
$14k for analysis of food frier
$15k for analysis of a food processing device

EKOS **2017**
$14k for analysis of flow distribution within stents
$14k for analysis of flow distribution within stents
$12k for analysis of flow distribution within stents

ALS Consulting **2016**
$15k for analysis of fluid flow in power plants

Precision Air **2016**
$1600 for simulation of airflow in operating rooms

Medtronic **2016**
$12k for simulation of tissue temperatures during transcutaneous recharge

3M **2015**
$12k to simulate airflow in ultra-clean operating rooms.

Cardiovascular Systems, Inc. **2015-2016**
$8,000 for the study of deformable arteries
$6,000 for biological flows and impellor design

AF Energy **2015**
$3000 wind turbine calculations

Intellectual Ventures Laboratory **2015**
$2000 wall condensation calculations

Medivators **2015**
$4000 for flow and pressure calculations medical chamber.

Flourescence, Inc. **2015**
$2,000 designing biological heater for cell environments

Mador Technologies **2015**
$20,000 analyzing a liquid nitrogen water condensation device

Koronis Biomedical Technologies **2015**
$5,000 simulation of fluid flow

4232 29th Ave.
Minneapolis, MN 55406

John P. Abraham

jpabraham@stthomas.edu
612-963-2169

Mador Technologies **2014-2015**
$8,000 analyzing a liquid nitrogen water condensation device

National Resources Defense Council **2015**
$10k for climate education work

Medtronic **2014**
$12k for simulation of tissue temperatures during transcutaneous recharge

Smiths Medical **2014**
$9.5k for design and optimization of medical warming blankets
$10k for the design and improvement of medical fans
$12kfor the design and analysis of human thermal analogs

WTS LLC **2014-present**
$1.5m for the design of solar pasteurization systems

Medivators **2014**
$4000 for flow and pressure calculations medical chamber.
$3000 for flow and pressure calculations medical chamber.

Somnetics **2014**
$6000 for flow and pressure calculations in CPAP devices.

Lake Region Medical **2013-2014**
$4500 for simulations of a guidewire manufacturing oven

Amphora Medical **2013-2014**
$55.5k for design of RF probes for ablation of bladder tissue

ALS Consulting **2013-2014**
$17.5k for analysis of fluid flow in power plants

Medtronic, Inc. **2012-2013**
$13k for analysis of subdermal heating associated with recharge of neuromodulation systems.

Phraxis **2013**
$2,250 for the analysis of blood flow through an AV shunt

Translational Biologic Infusion Catheter **2011-2013**
$21.5k for the study of flow and pressure drop in a stem-cell delivery catheter

Advanced Circulatory Systems, Inc. **2013**
$4200 for fluid flow modeling of medical-device blowers

HRST, Inc. **2012-2015**

4232 29th Ave. **John P. Abraham** jpabraham@stthomas.edu
Minneapolis, MN 55406 612-963-2169

$11,250 for analysis of flow patterns in manifolds

Devicix **2012**
$2000 for the analysis of medical-fluid injection devices

Helical **2012-2013**
$18,200 for the design and analysis of rooftop wind turbines

QiG Group **2012**
$7000 for study of thermoelectric technologies to power implants

HRST, Inc. **2012**
$4300 for analysis of perforated plates for flow uniformity

Energy Foundation **2012-2013**
$30k developing climate-science communication strategies

CriticCare **2012**
$4,275 for numerical modeling of accelerated aging of medical devices.

HRST, Inc. **2012**
$5,540 for research study on mixing efficiency in heat recovery plants.

Windstrip, LLC **2009-2013**
$1m for development of vertical axis wind turbines to power cellular communication equipment.

QiG Group **2011-2012**
$20k for study of implant heating of biological tissue

Phraxis **2011-2012**
$8,000 for the analysis of blood flow through an AV shunt

Energy Foundation **2011-2012**
$71k developing climate-science communication strategies

Cardiovascular Systems, Inc. **2011**
$23k for the study of paclitaxel distribution techniques.

Cardiovascular Systems, Inc. **2011**
$5,000 for the study of temperature management in palleted products

Galil Medical **2011**
$9,000 for the kidney tumor cryosurgical devices.

Multiple groups **2010**
$13,000 for installation of solar panels in Uganda

4232 29th Ave.
Minneapolis, MN 55406

John P. Abraham

jpabraham@stthomas.edu
612-963-2169

Imation
$10k for the design of a polymeric extrusion die **2010**

Cypress Wind
$30.6k for the development of a vertical axis, small-footprint wind turbine. **2010**

Cypress Wind
$27k for the development of a vertical axis, small-footprint wind turbine. **2009**

Cardiovascular Systems, Inc. **2009**
$80k for the study of cavitation and bolus formation during orbital atherectomy procedures.

Medtronic, Inc.
$65k for analysis of subdermal heating associated with recharge of neuromodulation systems. **2008-2011**

University of St. Thomas Faculty Development Grant **2009**
$4,200 for the purchase of a high-performance computer for numerical simulations.

CSUMS: A computational Training and Interdisciplinary Research Program for Undergraduates in the Mathematical Sciences at the University of St. Thomas **2008-2013**
Served as Senior Personnel on a $716,836 NSF award for the development of applied research projects for undergraduates in mathematics.

Lockheed Martin Innovative Program - Advanced Cooling Technology grant **2009**
$19.5k for the improvements to avionics heat pipe applications.

Horizontal Winds **2008-2009**
$11k for research on vertical-axis wind turbines

R4 Engineering **2008-2009**
$10k for analysis of building-support insulation systems

Lockheed Martin Innovative Program - Advanced Cooling Technology grant **2007**
$53k for the development of advanced electronic-cooling methodologies.

Arizant Medical **2006**
Characterization of a forced-air patient warming device

Johnson and Johnson, Newark, NJ **2004-2005**
Analysis of a uterine fibroid embolization device

Urologix **2004**
Design of thermoelectric device for heating/cooling of urological catheter fluids

4232 29th Ave.
Minneapolis, MN 55406

John P. Abraham

jpabraham@stthomas.edu
612-963-2169

Donaldson Co. **1999-2003**
Analysis and characterization of a filter-manufacturing device

Augustine Medical **2000-2003**
Characterization of a forced-air patient warming device

Midmac Systems Inc. **2002**
Thermal analysis of a polymeric sealing machine

Restore Medical **2002**
Characterization of sleep apnea treatment

Remmele Engineering Inc. **2002-2005**
Thermal analysis of a polymeric sealing machine for insulin packaging
Thermal analysis of liquid-based cold plates for cooling naval radar

MicroControl Company **2001**
Analysis of burn-in board devices

Jenni-O **2001**
Analyzed devices that handle, transport, and cool turkeys during processing.

Caterpillar **2000**
Analysis of a screed heating machine

ADC Telecom **2000**
Optimization of an AC/DC power converter

Viracon Glass **2000**
Design and analysis of glass thermal processing method

Entropy Solutions **2000**
Design and Analysis of insulation and phase change thermal management for shipping containers

XeteX, Inc **1996-2000**
Design of an air-to-air heat exchanger
Creation of a film processing machine for coating heat exchangers
Construction and operation of a full-sized HVAC test facility

Pneuseal **1996-1998**
Operation and optimization of a polymeric sealing device for medical packaging

Principal Investigator – Supercomputing Institute **2002-2012**
Served as PI for multi-year project dedicated to performing computational fluid dynamic studies. This grant awarded computing resources at the Supercomputing Institute for Digital Simulation and Advanced Computing.

4232 29th Ave.
Minneapolis, MN 55406

John P. Abraham

jpabraham@stthomas.edu
612-963-2169

Principal Investigator – ASHRAE Project Grant Program **2003**

Awarded a $5,000 grant funded by ASHRAE to investigate the efficacy of rotating-wheel heat and moisture exchangers.

Faculty Advisor – Bush Grant, Young Scholars Program **2002**

Faculty advisor for a $3,000 grant for undergraduate research of air-jet heat transfer for surgical applications.

Faculty Advisor – Bush Grant, Young Scholars Program **2002**

Faculty advisor for a $3,000 grant for undergraduate research to encourage American Indian students to pursue careers in science and technology.

A Multi-Function Heat Exchanger for Control of Temperature, Moisture, and Air Quality **1997-2000**

Project Engineer for $475K SBIR grants awarded by NSF, grant nos. 9660900 and 9801062