Trials@uspto.gov
571-272-7822

Paper 11
Date: February 13, 2025

UNITED STATES PATENT AND TRADEMARK OFFICE

BEFORE THE PATENT TRIAL AND APPEAL BOARD

MOTOROLA SOLUTIONS, INC.,
Petitioner,

v.

STELLAR LLC,
Patent Owner.

IPR2024-01207
Patent 8,692,882 B2

Before BRIAN J. McNAMARA, ROBERT L. KINDER, and NABEEL U. KHAN, *Administrative Patent Judges.*

KINDER, *Administrative Patent Judge*.

DECISION
Granting Institution of *Inter Partes* Review
35 U.S.C. § 314

I. INTRODUCTION

Motorola Solution, Inc. ("Petitioner") filed a petition, Paper 1 ("Petition" or "Pet."), to institute an *inter partes* review ("IPR") of claims 1–22 (the "challenged claims") of U.S. Patent No. 8,692,882 B2 ("the '882 patent"). 35 U.S.C. § 311. Stellar LLC ("Patent Owner") filed a Preliminary Response, Paper 8 ("Prelim. Resp."), contending that the Petition should be denied as to all challenged claims. We have jurisdiction under 35 U.S.C. § 314, which provides that an *inter partes* review may not be instituted unless the information presented in the Petition "shows that there is a reasonable likelihood that the petitioner would prevail with respect to at least 1 of the claims challenged in the petition."

A decision to institute under § 314 may not institute on fewer than all claims challenged in the petition. *SAS Inst., Inc. v. Iancu*, 138 S. Ct. 1348, 1359–60 (2018). In addition, per Board practice, if the Board institutes trial, it will institute "on all of the challenged claims and on all grounds of unpatentability asserted for each claim." *See* 37 C.F.R. § 42.108(a).

Having considered the arguments and the associated evidence presented in the Petition and the Preliminary Response, for the reasons described below, we institute *inter partes* review.

II. REAL PARTIES IN INTEREST

Petitioner identifies itself (Motorola Solutions, Inc.) and WatchGuard Video, Inc. as real parties-in-interest. Pet. 81. Patent Owner identifies itself (Stellar LLC) as its real party-in-interest. Paper 4, 2.

III. RELATED MATTERS

The parties state that the '882 patent is asserted in the following litigation: *Stellar, LLC v. Motorola Solutions, Inc., et al*., 4:23-cv-750 (EDTX) ("the parallel litigation"). Pet. 81; Paper 4, 2.

IV. EXERCISE OF DISCRETION

A. Discretion Under 35 U.S.C. § 314(a)- Fintiv

In the Preliminary Response, Patent Owner contends that we should exercise our discretion to deny the Petition in favor of the parallel litigation. Prelim. Resp. 5–18. The Board has held that the advanced state of a parallel district court action is a factor that may weigh in favor of denying a petition under § 314(a). *See NHK Spring Co. v. Intri-Plex Techs., Inc.*, IPR2018-00752, Paper 8 at 20 (PTAB Sept. 12, 2018) (precedential); Trial Practice Guide, 58 & n.2. We consider the following factors to assess "whether efficiency, fairness, and the merits support the exercise of authority to deny institution in view of an earlier trial date in the parallel proceeding":

1. whether the court granted a stay or evidence exists that one may be granted if a proceeding is instituted;
2. proximity of the court's trial date to the Board's projected statutory deadline for a final written decision;
3. investment in the parallel proceeding by the court and the parties;
4. overlap between issues raised in the petition and in the parallel proceeding;
5. whether the petitioner and the defendant in the parallel proceeding are the same party; and
6. other circumstances that impact the Board's exercise of discretion, including the merits.

Apple Inc. v. Fintiv, Inc., IPR2020-00019, Paper 11 at 5–6 (PTAB Mar. 20, 2020) (precedential) ("*Fintiv*"). In evaluating these factors, we "take[] a

holistic view of whether efficiency and integrity of the system are best served by denying or instituting review." *Id.* at 6.

On June 21, 2022, the Director of the USPTO issued several clarifications concerning the application of the *Fintiv* Factors. *See Interim Procedure For Discretionary Denials In AIA Post-Grant Proceedings With Parallel District Court Litigation,* issued June 21, 2022 ("Guidance Memo)[1]. The Director's memo states that "the precedential impact of *Fintiv* is limited to the facts of that case." Guidance Memo 2. Under the Guidance Memo "the PTAB will not rely on the *Fintiv* factors to discretionarily deny institution in view of parallel district court litigation where a petition presents compelling evidence of unpatentability." Guidance Memo 2.

> Compelling, meritorious challenges will be allowed to proceed at the PTAB even where district court litigation is proceeding in parallel. Compelling, meritorious challenges are those in which the evidence, if unrebutted in trial, would plainly lead to a conclusion that one or more claims are unpatentable by a preponderance of the evidence.

Guidance Memo 4.

The Guidance memo further states

> [c]onsistent with *Sotera Wireless, Inc*., the PTAB will not discretionarily deny institution in view of parallel district court litigation where a petitioner presents a stipulation not to pursue in a parallel proceeding the same grounds or any grounds that could have reasonably been raised before the PTAB.

Guidance Memo, 3. *See Sotera Wireless, Inc. v. Masimo Corp.,* IPR2020-01019, Paper 12 (PTAB Dec. 1, 2020) (precedential as to§ II.A).

The Guidance memo also states

---

[1] Available at https://www.uspto.gov/sites/default/files/documents/interim_proc_discretionary_denials_aia_parallel_district_court_litigation_memo_20220621_.pdf.

> when considering the proximity of the district court's trial date to the date when the PTAB final written decision will be due, the PTAB will consider the median time from filing to disposition of the civil trial for the district in which the parallel litigation resides.

Guidance Memo 3.[2] With these factors and guidance in mind, we consider parties' contentions.

1. *Factors 1, 2, and 5*

Patent Owner notes that Petitioner and its real party-in-interest (WatchGuard Video, Inc., acquired by Petitioner in 2019) are the only defendants in the parallel litigation. Prelim. Resp. 16 (citing Ex. 2013). Patent Owner also notes that Petitioner has not sought a stay in the parallel litigation and argues that a stay is unlikely because the court has entered an order setting trial to begin shortly after a Decision to Institute would be entered in this proceeding. Prelim. Resp. 9–10; Ex. 2006, 1 (Order setting trial date for March 10, 2025). Taken alone, factors 1, 2, and 5 favor exercising discretion to deny institution.

2. *Factors 3, 4, and 6*

Patent Owner emphasizes that, given the advanced state of the parallel litigation, the District Court and the parties have expended significant time and resources in preparing the parallel litigation for trial. Prelim. Resp. 13–15. Patent Owner advises that the District Court has appointed a technical advisor, considered extensive claim construction briefs, held a hearing and entered a preliminary *Markman* ruling on 16 claim terms, and had yet to decide *Daubert* motions at the time Patent Owner filed its Preliminary Response. *Id.* at 13–14; Ex. 2011. Patent Owner points to its Infringement

---

[2] *See* https://www.uscourts.gov/statistics-reports/analysis-reports/federal-court-management-statistics.

Contentions containing over 850 pages of claim charts alleging infringement of 14 claims over 8 asserted patents, as well as its investments in preparing opening and rebuttal expert reports and depositions to be conducted between the filing if its Preliminary Response and trial in the parallel litigation. *Id.* at 12–13. Patent Owner also cites the parties' investment of time and resources in assessing Petitioner's invalidity contentions based on over 115 prior art references including 16 for the patent and patent application references relied on in the Petition. *Id.* at 13 (citing Ex. 2004).

Although we are sensitive to the expenditure of time and effort preparing for trial in the parallel litigation, we also recognize the limited time and resources available in conducting a trial in the parallel litigation. Patent Owner's infringement case alone, involving over 850 claim charts, could present a substantial, if not overwhelming, burden on the district court's resources. Trying invalidity issues adds to that burden.

Patent Owner acknowledges that "Petitioner's expert report on validity repeats all of the assertions in this Petition." Prelim. Resp. 13. Thus, a significant portion of the resources consumed in preparing for trial would likely be useful in this proceeding. On November 11, 2024, Petitioner offered a stipulation, stating that, upon institution on this proceeding, Petitioner "will not pursue as to the challenged claims any ground raised or that reasonably could have been raised during the IPR" in the parallel litigation. *See* Ex. 1043 (filed in this proceeding Nov. 27, 2024). Petitioner's stipulation applies to the following proceedings, which includes this proceeding: IPR2024-01205, challenging claims 1–20 of U.S. Patent No. 7,593,034; IPR2024-01206, challenging claims 1–13 of U.S. Patent No. 9,485,471; IPR2024-01207, challenging claims 1–22 of U.S. Patent No. 8,692,882; and IPR2024-01208, challenging claims 1–23 of U.S. Patent

No. 9,912,914. Notably, in this IPR, Petitioner challenges all claims of the ’882 patent.

In view of Petitioner’s stipulation, the substantial number of issues to be addressed in the District Court, Patent Owner’s acknowledgement that Petitioner’s expert report in the parallel litigation repeats the assertions in this Petition, and the potential reduction of issues to be tried in the parallel litigation, our weighing of the factors is against exercising discretion to deny institution. As discussed below, we also recognize that Petitioner’s contentions have merit.

In consideration of the above, we decline to exercise discretion to deny institution. We now address the substantive issue presented in the Petition.

V. THE ’882 PATENT

The ’882 patent (Ex. 1033), titled “Loop Recording with Book Marking,” describes a surveillance apparatus with a “camera functionally coupled to a local memory with a circular buffer.” Ex. 1033, 2:14–15. The “surveillance apparatus processes images by (1) continuously recording a stream of imaged data, (2) write protecting segments of the recorded stream, and (3) sending write protected segments from a local memory to a remote memory using a wireless transmitter.” *Id*. at 2:9–13. Figure 1 depicts a view of a camera 120 coupled to a belt-worn recorder 160 via data and power cord 140. *Id*. at 3:40–42. Also depicted, is a remote memory 170, circular buffer 167, memory 166, and signaling device 150. *Id*. at 3:52–58. Figure 1 is reproduced below:

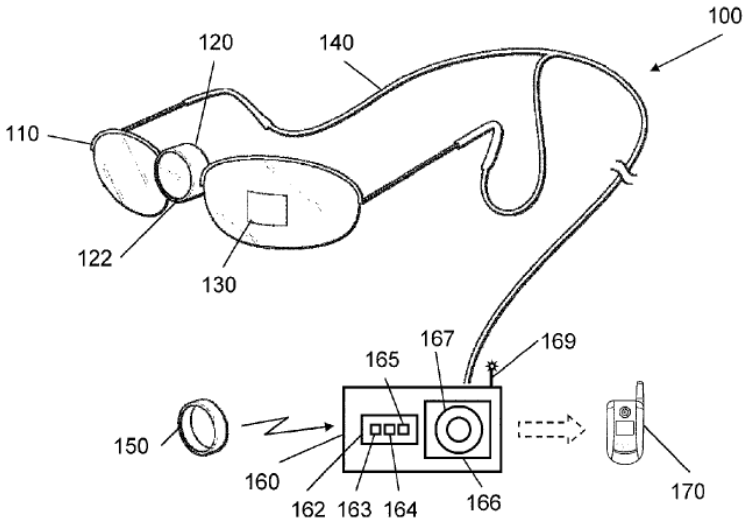

FIG. 1

Recorder 160 is described as any "recording device that records video and/or audio/video data" and "preferably includes a processor 162 with software or hardware" or "one or more physical memories [166]." *Id*. at 4:50–55. Image data received by recorder 160 is stored in circular buffer 167 on memory 166, where "[p]referably, all the free space in memory 166 is used to create circular buffer 167, however multiple circular buffers could be created in the memory." *Id*. at 5:52–59.

Figure 3 is depicted below.

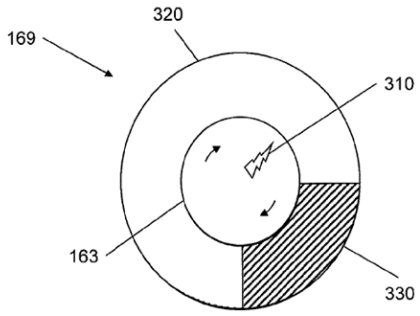

FIG. 3

Figure 3 illustrates a diagram representation of the circular buffer 167 of Figure 1, with an unprotected segment 320 and write-protected 330. *Id*. at 7:23–25. The protected segment 330 is characterized as "a predefined portion of the recording data." *Id*. at 7:25–26. A protected segment 330 occurs upon receipt of a "signal to record" which records video data pre- and post-signal. *Id*. at 2:36–39. The recording facility 163 not only continuously records the data stream 310 into the circular buffer 167, but also "records over unprotected segment 320 of circular buffer 167, while skipping over protected segments 330." *Id*. at 7:26–31. It is disclosed that, "it is contemplated that the portion of the circular buffer that is marked as write-protected data [330] cannot be overwritten once the recorder loops back to the beginning of the media." *Id*. at 7:31–34. The "write-protected portions could be electronically indexed using a memory heap or a clustered index, [] preferably stored as separate files in the memory." *Id*. at 2:47–50.

VI. ILLUSTRATIVE CLAIM

Of the challenged claims, the independent claims are 1 and 12. Each of dependent claims 2, 4–9, and 11 depend directly from claim 1. Each of dependent claims 13–19 and 21 depend directly from claim 12. Claim 1 reproduced below with paragraph designations used in the Petition is illustrative of the subject matter of the '882 patent.

> 1. A surveillance apparatus, comprising:
> [a] a camera having an image data capturing component that captures image data;
> [b] a local memory functionally coupled to the camera;
> [c] a recording facility that records the image data into available portions of a circular buffer in the local memory as a first file using a *digital video file format*;
> [d] a protecting facility that responds to a signal to record the image data by *designating a segment* of the circular buffer as a *write-protected portion* and by *indexing* the write-protected

portion as a second file in the circular buffer, wherein the segment includes a pre-recorded subset recorded before the signal is received and a post-recorded subset to be recorded after the signal is received; and

[e] wherein the local memory is configured to allow access to at least one of the files.

Ex. 1033, 11:48–64 (emphases added).

VII. ASSERTED GROUNDS

Petitioner asserts that claims 1–22 would have been unpatentable on the following grounds.[3]

Claim(s) Challenged	35 U.S.C. §	Reference(s)
1–6, 9, 11–18, 21, 22	103	Yerazunis,[4] Fiore[5]
7, 8	103	Yerazunis, Fiore, Lwellen[6]
10	103	Yerazunis, Fiore, Mann[7]
19, 20	103	Yerazunis, Fiore, Fiedler[8]
1, 2, 4–6, 9, 11–18, 21	103	Ely,[9] Fiore
3, 7, 8, 22	103	Ely, Fiore, Lewellen
10	103	Ely, Fiore, Mann
19, 20	103	Ely, Fiore, Fiedler

[3] Petitioner supports its challenge with the Declaration of Nabil J. Sarhan, Ph. D., Ex. 1003 ("Sarhan Decl.").
[4] U.S. Patent 7,158,167; filed Sept. 9, 1998; issued Jan. 2, 2007 (Ex. 1017)
[5] U.S. Patent Publication No. 2002/191952; filed Apr. 9, 2002; published Dec. 19, 2002 (Ex. 1009)
[6] U.S. Patent Publication No. 2004/008255; filed July 11, 2002; published Jan. 15, 2004 (Ex. 1019)
[7] EP 1,064,783; filed Mar. 25, 1999; published June 4, 2003 (Ex. 1015)
[8] U.S. Patent 6,804,638; filed June 20, 2001; issued Oct. 12, 2004 (Ex. 1037)
[9] U.S. Patent 5,982,418; issued Nov. 9, 1999 (Ex. 1020)

VIII. LEVEL OF ORDINARY SKILL IN THE ART

Petitioner describes a person of ordinary skill in the art ("POSITA" or "ordinarily skilled artisan") as having "at least a Bachelor's Degree in electrical engineering, computer science, or computer engineering, or undergraduate training in an equivalent field and at least two years of relevant experience in electronics technology." Pet. 7 (citing Ex. 1003 ¶¶ 24–25). Petitioner further states that "[a]dditional graduate education could substitute for professional experience, and significant work experience could substitute for formal education." *Id.* Patent Owner does not address the qualifications of a person of ordinary skill in the art. *See* Prelim. Resp.

The level of ordinary skill in the art usually is evidenced by the references themselves. *See Okajima v. Bourdeau*, 261 F.3d 1350, 1355 (Fed. Cir. 2001); *In re GPAC Inc.*, 57 F.3d 1573, 1579 (Fed. Cir. 1995). As Petitioner's proposed description of a person of ordinary skill in the art is commensurate with the subject matter of the '882 patent and the references, we apply Petitioner's description for purposes of this Decision.

IX. CLAIM CONSTRUCTION

A. Legal Standard

We interpret claim terms using "the same claim construction standard that would be used to construe the claim in a civil action under 35 U.S.C. 282(b)." 37 C.F.R. § 42.100(b) (2019). In this context, claim terms "are generally given their ordinary and customary meaning" as understood by a person of ordinary skill in the art in question at the time of the invention. *Phillips v. AWH Corp.*, 415 F.3d 1303, 1312–13 (Fed. Cir. 2005) (en banc) (citations omitted). "In determining the meaning of the disputed claim limitation, we look principally to the intrinsic evidence of record, examining the claim language itself, the written description, and the prosecution

history, if in evidence." *DePuy Spine, Inc. v. Medtronic Sofamor Danek, Inc.*, 469 F.3d 1005, 1014 (Fed. Cir. 2006) (citing *Phillips*, 415 F.3d at 1312–17). Extrinsic evidence is "less significant than the intrinsic record in determining 'the legally operative meaning of claim language.'" *Phillips*, 415 F.3d at 1317 (citations omitted). Any special definition for a claim term must be set forth in the specification with reasonable clarity, deliberateness, and precision. *In re Paulsen*, 30 F.3d 1475, 1480 (Fed. Cir. 1994).

"The Board is required to construe 'only those terms . . . that are in controversy, and only to the extent necessary to resolve the controversy.'" *Realtime Data, LLC v. Iancu*, 912 F.3d 1368, 1375 (Fed. Cir. 2019) (quoting *Vivid Techs., Inc. v. Am. Sci. & Eng'g, Inc.*, 200 F.3d 795, 803 (Fed. Cir. 1999)).

Below, we address certain claim terms for purposes of this Decision.

1. *"a local memory functionally coupled to the camera"*

Independent claim 1 includes the limitation "a local memory functionally coupled to the camera[]." Petitioner proposes the term to be construed to mean "a memory that is distanced less than 20 cm from the camera and is coupled to the camera using entirely physical connectors." Petitioner contends the parties have agreed to such construction in the corresponding district court litigation. Pet. 9; Ex. 1021, p. 001.

Although Petitioner's proposed construction stems from the claim construction set forth in the Specification and the construction agreed to in corresponding district court litigation (Ex. 1021, at 1), we determine that an explicit construction of "a local memory functionally coupled to the sensor" is not necessary for purposes of this Decision.

2. *"file"*

Independent claims 1 recites "a recording facility that records the image data into available portions of a circular buffer in the local memory as a first *file*" and "indexing the write-protection portion as a second *file* in the circular buffer." Ex. 1033, 11:48–64. Independent claim 12 includes a similar recitation of the term "file." *Id*. at 12:26–39.

Petitioner contends that within the context of the claimed invention, "the term 'file' should be given its plain and ordinary meaning," and this plain and ordinary meaning is "an identifiable collection of data." Pet. 9–12; Ex. 1003 ¶¶ 122–128. Petitioner cites the Specification for the proposition that "the entire circular buffer can be treated as a file" and write-protected segments are also treated as files. Pet. 10 (citing Ex. 1033, 5:66–6:7 ("It is preferred when the recorder is turned on the entire circular buffer is treated and stored as a single file.")). Petitioner also relies on Figure 4H as showing a file that collects the physically contiguous "C" portions to form an identifiable collection of data, and once identified, the data composing the file may be further used. Pet. 11 (citing Ex. 1033, 9:29–39). Relying on the testimony of Dr. Sarhan, Petitioner argues that "[t]he patent does not suggest any particular type of file is required and thus provides no basis for departing from this plain and ordinary meaning." *Id.* (citing Ex. 1003 ¶ 125).

Patent Owner disagrees with equating a "file" to "an identifiable collection of data." Prelim. Resp. 31. According to Patent Owner, "Petitioner's proposed construction ignores the prosecution history of the '034 patent, which the '882 patent is a continuation of." *Id.* at 31–32. This file history discusses "that storing captured data in a circular buffer as files facilitates exchange of data with other remote device without requiring post

processing or finalization of the data as is required by known systems, including the cited art," and the references relied on "both discuss circular buffers," but "neither disclose storing data streams as files within the circular buffer." *Id.* at 32 (quoting Ex. 1013, at 285–86 (emphases omitted). Relying on this file history, Patent Owner contends that "the term 'file' [] indicate[s] something that would 'facilitate [the] exchange of data' and eliminate the need for further 'processing' of the data." *Id.* at 33 (quoting Ex. 1013 at 285–86).

Having reviewed the parties' arguments we determine, as explained further below in our analysis of claim 1 (§ X.B.3), that an express construction of the term "file" is not necessary at this stage of the proceeding.

A final determination as to claim construction will be made at the close of the proceeding, after any hearing, based on all the evidence of record. The parties are expected to assert all their claim construction arguments and evidence in the Petition, Patent Owner's Response, Petitioner's Reply, Patent Owner's Sur-reply, or otherwise during trial, as permitted by our rules. Claim construction arguments should not be relegated to patentability arguments on the facts.

X. ANALYSIS

A. Introduction

"In an [*inter partes* review], the petitioner has the burden from the onset to show with particularity why the patent it challenges is unpatentable." *Harmonic Inc. v. Avid Tech., Inc.*, 815 F.3d 1356, 1363 (Fed. Cir. 2016) (citing 35 U.S.C. § 312(a)(3) (requiring *inter partes* review petitions to identify "with particularity . . . the evidence that supports the grounds for the challenge to each claim")). This burden of persuasion never

shifts to Patent Owner. *See Dynamic Drinkware, LLC v. Nat'l Graphics, Inc.*, 800 F.3d 1375, 1378 (Fed. Cir. 2015) (discussing the burden of proof in *inter partes* review).

The question of obviousness is resolved on the basis of underlying factual determinations including: (1) the scope and content of the prior art; (2) any differences between the claimed subject matter and the prior art; (3) the level of ordinary skill in the art; and (4) objective evidence of nonobviousness.[10] *Graham v. John Deere Co.*, 383 U.S. 1, 17–18 (1966).

Additionally, the obviousness inquiry typically requires an analysis of "whether there was an apparent reason to combine the known elements in the fashion claimed by the patent at issue." *KSR Int'l Co. v. Teleflex Inc.*, 550 U.S. 398, 418 (2007) (citing *In re Kahn*, 441 F.3d 977, 988 (Fed. Cir. 2006) (requiring "articulated reasoning with some rational underpinning to support the legal conclusion of obviousness")). An obviousness analysis "need not seek out precise teachings directed to the specific subject matter of the challenged claim, for a court can take account of the inferences and creative steps that a person of ordinary skill in the art would employ." *KSR*, 550 U.S. at 418; *accord In re Translogic Tech., Inc.*, 504 F.3d 1249, 1259 (Fed. Cir. 2007). Petitioner cannot satisfy its burden of proving obviousness by employing "mere conclusory statements." *In re Magnum Oil Tools Int'l, Ltd.*, 829 F.3d 1364, 1380 (Fed. Cir. 2016). Instead, Petitioner must articulate a reason why a person of ordinary skill in the art would have combined the prior art references. *In re NuVasive*, 842 F.3d 1376, 1382 (Fed. Cir. 2016).

---

[10] Neither party has introduced objective evidence at this phase of the proceeding.

We analyze the asserted grounds of unpatentability in accordance with these principles to determine whether Petitioner has met its burden to establish a reasonable likelihood of success at trial.

B. Ground 1a: Asserted Obviousness over the Combination of Yerazunis and Fiore[11]

Petitioner contends that claims 1–6, 9, 11–18, 21 and 22 would have been unpatentable as obvious over Yerazunis in view of Fiore (Ground 1a). Pet. 12. Petitioner also argues that dependent claims 7 and 8 would be unpatentable over Yerazunis, Fiore, and Lewellen (Ground 1b) (Pet. 43), that dependent claim 10 would have been unpatentable over Yerazunis, Fiore, and Mann (Ground 1c) (Pet. 48), and that that dependent claims 19 and 20 would have been unpatentable over Yerazunis, Fiore, and Fiedler (Ground 1d). Pet. 49.

Having considered the arguments and evidence presented by the parties, we determine that Petitioner has shown a reasonable likelihood of prevailing on its assertion that the challenged claims would have been unpatentable as obvious over these cited references for the reasons explained below.

1. *Overview of Yerazunis (Ex. 1017)*

Yerazunis is a patent titled "Video Recording Device for a Targetable Weapon," which was published on January 2, 2007, and is therefore prior art

---

[11] Because Petitioner describes each ground as obvious over a primary reference "alone or as combined with" other references, each ground includes two possible combinations of references. However, for purposes of this Decision, we analyze each ground as if it were over all the listed references combined. *See, e.g.*, Pet. 7 ("**Ground 1a**: Claims 1–6, 9, 11–18, 21, and 22 would have been obvious under 35 U.S.C. § 103 over [Yerazunis] *alone or as combined with* [Fiore]." (emphasis added)); *see generally id*. at 12.

under 35 U.S.C. §§ 102(a), (e). Ex. 1017, code (45). Patent Owner does not challenge the prior art status of Yerazunis at this stage of the proceeding. *See generally* Prelim. Resp.

Yerazunis relates to a mountable compact video image recording device for different applications. *Id*. 12; Ex. 1017, Abstract, 1:21–31, 3:5–10, 9:8–16. Two embodiments Yerazunis sets forth are applications where evidentiary video recording is sought: a "video recording device . . . mounted to a targetable weapon, such as a gun," and a recording device mounted on a vehicle. *Id*. at 3:9–10, 4:37–40. Yerazunis' invention relates to video recording "circumstances existing immediately prior to and after an accident" or "an event triggering an alert condition and following the triggering of such a condition." *Id*. at 1:22–31. Figure 3 is depicted below.

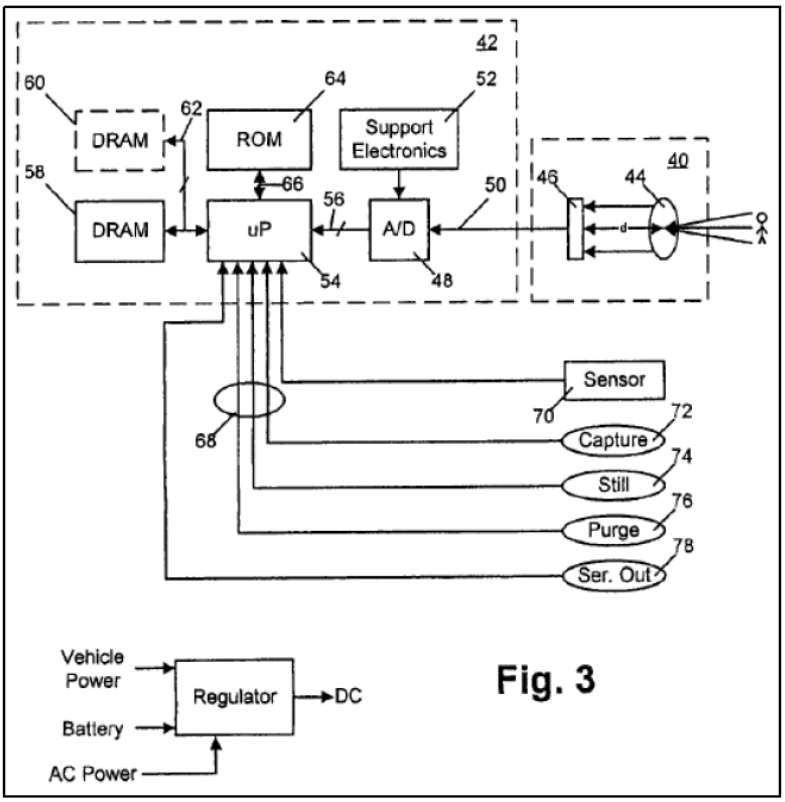

Fig. 3

Figure 3 illustrates an "electrical block diagram of a video recording device." *Id.* at 3:55–56. Accordingly, as depicted, Yerazunis' device is

designed to "recor[d] video frames successively in at least one circular buffer memory organized as a continuous loop overwriting the oldest frame within the respective buffer memory[,] with a more recently received frame." *Id*. at 2:19–23. Yerazunis states that, "a pre-determined number of additional frames are recorded within the circular buffer memory" when there is an event that triggers an alert condition. *Id*. at 4:49–53.

Additionally, to increase overall recording time for the device, video data is selectively stored to a respective group within a plurality of circular memory buffer groups. *Id*. at 2:26–28. When the sensor detects a trigger event, the predetermined number of frames are stored in the successive frame locations within the circular buffer in the semiconductor memory. *Id*. at 8:26–30. The "video frame data stored within the circular buffer corresponds to an equal number of video frames captured prior to the trigger event and after." *Id*. at 8:35–38. The video data corresponding to the video frame is converted to digital data via the A/D converter and transmitted to the microprocessor which compresses the frame data to "permit a greater number of frames to be stored within the circular buffer." *Id*. at 10:59–66.

2. *Overview of Fiore (Ex. 1009)*

Fiore is a patent titled "Data Recording and Playback System and Method," which was published on December 19, 2002, and is therefore prior art under 35 U.S.C. §§102(a), (b), (e). Ex. 1009, code (43). Patent Owner does not challenge the prior art status of Fiore at this stage of the proceeding. *See generally* Prelim. Resp.

Fiore relates to a "data recording and playback systems for monitoring processes or occurrences of events which allows the replay and/or analysis of a time sampled signal." Ex. 1009 ¶ 3. More specifically, Fiore discloses a "circular storage buffer" which "is implemented as a memory-mapped

file." *Id*. ¶¶ 47, 65, 68; Ex. 1003 ¶ 143. Further, Fiore discloses indexing data frames associated with events as files within circular storage buffer to "index" identifiable collections of data for respective events in circular storage buffer 15. Ex. 1009 ¶¶ 22, 23, 51, 59, 60.

Figure 2 is depicted below.

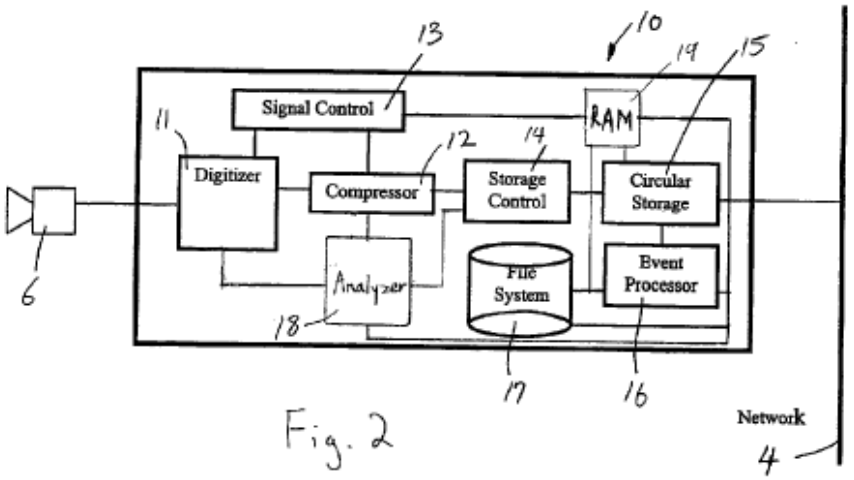

Fig. 2

Figure 2 depicts a "schematic illustration of one embodiment of a signal processor that may be used in implementing the data recording and playback system." Ex. 1009 ¶ 27. As depicted in Figure 2 above, the "input signal data from the monitoring device 6 is stored as data frames into the circular storage buffer 15 by the storage control 14." *Id*. ¶ 48. The frames are later extracted and stored in file system 17, providing a permanent record. *Id*. The event processor 16 marks the signal data being stored in circular storage buffer to flag the location of an occurrence. *Id*. Fiore further discloses the ability to playback data frames from the signal processor 10 with event annotation so that the signal data can be viewed and analyzed. *Id*. ¶ 52.

3. *Independent Claims 1 and 12*

Independent claim 1 is directed to a surveillance apparatus, and independent claim 12 is a method claim with similar limitations and in such

case, in view of these similarities, claims 1 and 12 are addressed together. Pet. 19. Petitioner presents contentions that claim 1 would have been obvious over the combined teachings of Yerazunis and Fiore. Pet. 18–19 (combination), 19–34 (claim 1). Patent Owner opposes. Prelim. Resp. 26–34.

More specifically, Patent Owner contends Yerazunis fails to teach two key requirements of the ’882 patent: (1) selective write-protection within a circular buffer, (2) storing of data corresponding to an event signal as a distinct file within the buffer. *Id*. Patent Owner further argues the combination of Fiore with Ely does not remedy this deficiency and Petitioner has not established a motivation to combine these references. *Id*. at 34–39.

a) Combination of Yerazunis and Fiore

Petitioner argues that a POSITA would have been aware Yerazunis and Fiore both “disclose data recording systems that store data in a circular buffer and preserve data associated with an event—before and after an event trigger” and therefore would be motivated to combine the references. Pet. 18. More specifically, Petitioner argues a POSITA would be motivated to combine the video image recording device of Yerazunis with Fiore to implement a circular storage buffer with a memory mapped file with capability to index “event data as files within the circular storage buffer.” Pet. 18–19 (citing Ex. 1003 ¶¶ 168–172; Ex. 1009 ¶¶ 22, 23, 51, 59, 60). Petitioner argues Fiore introduces “numerous benefits” with its file-based approach, alleging that it provides “significant performance gains” and allows “playback from the circular storage buffer without interrupting recording into the circular storage buffer.” Pet. 18. Petitioner argues a POSITA would have a reasonable expectation of success because Fiore’s

file-based approach is provided in a detailed-disclosure, and "applying those techniques to Yerazunis would have been routine and well within a POSITA's skill." Pet. 19.

Patent Owner disagrees with Petitioner and asserts Petitioner "has failed to meet its burden of showing that a POSITA would have been motivated to combine Yerazunis and Fiore" to arrive at the inventions of claims 1 and 12. Prelim. Resp. 34 (citing Pet. 18). Patent Owner argues Yerazunis and Fiore are incompatible systems. *Id*. at 34–39. First, Patent Owner argues that Yerazunis is a "compact video image recording device' for different applications" which is contradictory to Fiore's description as distinguishing itself from specialized devices, further describing that it is "not readily transferable to event recording and playback devices." *Id*. at 35 (citing Ex. 1009 ¶ 9).

Further, Patent Owner argues the preservation efforts of Yerazunis in comparison to Fiore are contradictory. Patent Owner argues that while Fiore has a "fundamental purpose" to "avoid 'dropped frames' or any scenario where real-time data is not captured and stored," Yerazunis allows the cessation of recording "video data after a predetermined number of frames following a trigger." *Id*. at 35–36 (citing Ex. 1009 ¶¶ 12, 13). Further, Patent Owner argues Fiore would not be a source a POSITA would reference in regards to a "solution to selectively write-protect segments of continuously recorded data while the data resides in the circular buffer" because such technology is not disclosed in Fiore. *Id*. at 36. Patent Owner argues that instead, Fiore "teaches that individual event data may be transferred to a different memory location." *Id*. at 36–37.

Patent Owner contends that in addition to not disclosing "selectively write-protecting those individual segments of time-stamped event data

within a circular buffer" it also does not create or store "individual event files within a circular buffer." *Id*. at 37. Patent Owner contends that "event files within temporary storage is expressly discouraged in Fiore's background section," relying on portions of Fiore that indicate to compiling a plurality of files is cumbersome and time consuming. *Id*. at 37–38 (citing Ex. 1009 ¶¶ 10, 20). Patent Owner relies on this to assert the argument that Fiore only discloses a memory mapped file and that is distinct from the "information stored in Fiore's buffer" which is "identified as 'frames' or 'data.'" *Id*. at 38. Patent Owner also argues that Petitioner "conflate[s] Fiore's use of event time-stamps to create event files (called 'secondary memory mapped files') that are stored in an 'event database,' with an idea that is nowhere disclosed in Fiore, of indexing 'files within the memory-mapped file." Instead, Patent Owner argues that Fiore "seeks to avoid such 'multi-tasking' demands." *Id*. at 38–39 (citing Ex. 1003 ¶ 13).

In addition, Patent Owner argues that storage time of Yerazunis is contradictory to core efforts of Fiore. *Id*. at 36. Patent Owner contends Yerazunis discloses "that recorded data frames will only be stored in buffer memory 'for a short period of time,'" and therefore when the buffer is full this renders Yerazunis incompatible with the "core needs targeted in Fiore" to avoid dropping frames. *Id*. at 36 (citing Ex. 1017, Abstract; Ex. 1009 ¶ 16). Patent Owner adds that the "data decimation algorithms to save semiconductor buffer space" in Yerazunis is an "anathema to the teachings of Fiore, which seeks to avoid dropping frames." *Id*. at 37 (citing Ex. 1009 ¶¶ 12–13).

At this stage of the proceeding, we are persuaded that Petitioner has established a reasonable likelihood that a person of ordinary skill would have combined the teachings of Yerazunis and Fiore for the reasons

provided by Petitioner and summarized above. Several of Patent Owner's arguments do not directly address the specific combination proposed by Petitioner nor the specific motivations provided by Petitioner. For example, as explained further below in our analysis of claim 1, the gun embodiment of Yerazunis does not stop recording video after a triggering event. *See* Ex. 1017, 17:50–59. Moreover, Fiore's file-based approach would provide the benefits highlighted by Petitioner regardless of whether Yerazunis stops recording video after a triggering event or continues recording to the next event. Similarly, the argument that Fiore does not selectively write protect data does not address Petitioner's combination, which relies on Yerazunis, not Fiore, for teaching selectively write protecting data. Patent Owner's argument also does not explain why a person of ordinary skill would not use Fiore's file-based approach in implementing Yerazunis's video recording device. Finally, Patent Owner's argument that Fiore does not store individual segments within the circular buffer does not address Petitioner's reliance on Yerazunis's gun implementation in which individual segments are stored in the circular buffer. *See* Pet. 28 ("Yerazunis does disclose that in a gun camera embodiment, 'the head pointer 104 and the tail pointer 102 . . . defining the area(s) of the circular buffer memory, are stored in a table to allow later retrieval of the video data pertaining to each firing of the gun.'" (quoting Ex. 1017, 17:50–56)); *see also* Pet. 30–32, 38–39.

b) Preamble[12]: a surveillance apparatus comprising:

Petitioner argues that Yerazunis teaches this limitation.[13] Pet. 19 (citing Ex. 1003 ¶ 330). Petitioner argues Yerazunis discloses a surveillance apparatus of claim 1, and further that Patent Owner admitted this limitation is known in the art. *Id*. at 20 (citing Ex. 1013, at 94, 100, 106–107). Additionally, Petitioner argues Yerazunis discloses a "method of operation of the video recording device" and thus discloses "[a] method of processing imaged data from a camera" of claim 12. *Id*. at 20 (citing Ex. 1003 ¶ 332; *see also* Ex.1017, 10:55–11:30, 16:4–8, 17:45–61).

On this record, the cited evidence supports Petitioner's undisputed contention that Yerazunis in combination with Fiore teach the preamble.

c) Element 1: a camera having an image capturing component that captures image data;

Petitioner argues that Yerazunis teaches this limitation. *Id*. (citing Ex. 1003 ¶ 333). Petitioner argues Yerazunis discloses an "imaging capturing component" of claim 1 because camera 40 and video electronics 42 "collectively include an image sensor 46 [] that captures image data and one or more ADCs 48 that generate a digital representation of the image data." *Id*. at 21–22 (citing Ex. 1003 ¶ 334). Additionally, Petitioner argues Yerazunis discloses "video data" because ADCs 48 output "video frames in digital form." Pet. 22 (citing Ex. 1017, 5:60–67, 6:52–55, 7:26–32; Ex. 1003 ¶ 335).

---

[12] We use the designated headings added by Petitioner in reproducing the elements of claim 1. As addressed in the Petition, differences between the language of claims 1 and 12 are found in the discussion for each element (*see* Pet. 19–34).

[13] Because Petitioner has shown that the cited references teach the preamble we need not determine whether the preamble is limiting.

On this record, the cited evidence supports Petitioner's undisputed contention that Yerazunis in combination with Fiore teach this limitation.

d) Element 2: a local memory functionally coupled to the camera;

Petitioner argues that Yerazunis teaches this limitation. *Id*. Petitioner argues Yerazunis discloses "a local memory functionally coupled to the camera" because the DRAMs 58, 60, (i.e., the local memory) are coupled to microprocessor 54 via physical connectors. *Id*. at 22–24 (citing Ex. 1017, 5:40–43, 6:14–23, 6:24–36). Petitioner states Patent Owner admitted this limitation as known in the art. *Id*. at 25 (citing Ex. 1013 ¶¶ 101, 107). Additionally, Petitioner argues a POSITA would have understood such physical connection of the memory would encompass a distance less than 20 cm from the claimed camera as Yerazunis discloses an embodiment of a mountable "recording device that 'is contained within a compactly sized housing.'" *Id*. at 24 (quoting Ex. 1017, 2:12–14; Figs 2a, 2b).

On this record, the cited evidence supports Petitioner's undisputed contention that Yerazunis in combination with Fiore teach this limitation.

e) Element 3: a recording facility that records the image data into available portions of a circular buffer in the local memory as a first file using a digital video file format;

Petitioner argues that Yerazunis, alone or in combination with Fiore, teaches this limitation. Pet. 25 (citing Ex. 1003 ¶ 340). Petitioner notes that "while Yerazunis does not expressly refer to recording the image data into the circular buffer 'as a first file,'" it does disclose storage of video data in defined areas of the circular buffer memory (formed in DRAM 58). *Id*. at 28 (citing Ex. 1017, 17:50–56). Petitioner argues Yerazunis discloses a camera 40 which captures video that is then converted by ADC 48 into a digital

signal to microprocessor 54, which then "compresses the digitized frame data and stores the compressed frame data in the next sequential location of [a] circular buffer." Pet. 26 (citing Ex. 1017, 2:45–47, 6:24–26, 6:52–7:6, 10:55–67, 17:50–59)).

Petitioner further argues the disclosure of data storage "corresponding to particular events 'in a table' for 'later retrieval,'" would have made recording the data "as a first file" in the circular buffer an obvious and finite solution for a POSITA. Pet. 28 (citing Ex. 1003 ¶ 344). Further, Petitioner, relying on the testimony of Dr. Sarhan, contends that the use of a file was a well-known approach for image data to be recorded in a circular buffer. *Id*. (citing Ex. 1003 ¶ 344).

Petitioner additionally argues a POSITA looking for "further guidance as to particular methods for recording image data as files in Yerazunis's buffer, [] would have been motivated to turn to Fiore." Pet. 29 (citing Ex. 1003 ¶ 345). Petitioner argues the memory-mapped filing system of Fiore "index[es] collections of frame data for respective events as files within the memory mapped-file." *Id*. (citing Ex. 1009 ¶¶ 22, 23, 51, 59, 60). Petitioner argues that a POSITA would have been motivated to implement Yerazunis's microcontroller 54 along with the Fiore filing system because it allows "playback of video data for a specific event from the circular buffer without interrupting simultaneous recording of new video data into the buffer." *Id*. (citing Ex. 1009 ¶¶ 65, 67, 68, 72).

Patent Owner argues that Yerazunis alone, or in combination with Fiore, does not teach a "first file using digital file format," nor teach "indexing the write-protected portion as a second distinct file in the circular

buffer." Prelim. Resp. 29–30.[14] Patent Owner argues that there is "no mention of any 'file' at all" in Yerazunis and therefore Yerazunis fails to teach recording of a first file using a digital video file format. *Id*. Patent Owner further argues Petitioner's assertion that a POSITA would equate compression of frame data with a digital file format is conclusory and unsupported because Petitioner's expert does not provide explanation for why a POSITA would have such an understanding. *Id*. at 30 (citing *Innogenetics, N.V. v. Abbott Labs*., 512 F.3d 1363, 1373 (Fed. Cir. 2008)). Additionally, Patent Owner argues that Petitioner's concession that the image data recorded into the circular buffer is not expressly referred to as a "first file" equates to an admission that compression of frame data could not be considered a digital video file. *Id*. at 31 (citing Pet. at 28).

Examining the claim requirement for "indexing the write-protected portion as a second distinct file in the circular buffer," Patent Owner further argues Yerazunis "fails to disclose storing a signal-designated, write-protected event file in the buffer." *Id*. Patent Owner disagrees that a POSITA would understand the storage of particular events "'in a table' for 'later retrieval'" as a file-based recording. *Id*. (citing Pet. at 28). Patent Owner further argues Petitioner "oversimplif[ies] the claimed concept of '***file'*** to mean merely 'an *identifiable collection of data,*" ignoring the prosecution history. *Id*. at 31–32. Patent Owner asserts that certain rejections were "dropped in view of these distinctions made over the cited prior art, which included the concept of file storage but not the claimed inclusion of a file of signal-designated write-protected data stored within the

[14] We have removed certain added emphases when quoting party arguments.

circular buffer." *Id*. More specifically Patent Owner emphasizes the following from the prosecution history:

> Traditional file systems are completely unsuitable for use within circular buffer because they expect bounded extents, among other limitations. *Therefore, having files within a circular buffer of the claimed apparatus would be non-obvious, especially where a file (*i.e.*, the second distinct file) could be created in the middle of another file (*i.e., the first file*).*

Id. at 32 (quoting Ex. 1013, at 285–286) (emphasis omitted).

Additionally, Patent Owner further argues that Petitioner's construction of "file" is contradicted by the intrinsic record. *Id*. at 33. Patent Owner argues Petitioner's construction of "file" is "overly broad" as compared to Patent Owner's use of the term to mean, "*facilitate [the] exchange of data*" which per Patent Owner "eliminate[s] the need for further '*processing*' of the data." *Id*. (citing Ex. 1013, at 285–286). Patent Owner argues Petitioner attempts to assert file as synonymous with table, but that such "disclosure fails to teach storing such a table within the buffer itself." *Id*. Further, Patent Owner argues Petitioner's use of file is at "odds with its own extrinsic evidence." *Id*. at 34. Patent Owner supports this argument stating that the use of dictionary definitions show that files need proper software to handle its contents and therefore asserts that the '882 patent requires allowing "access" to their write-protected "files" from within the buffer, differentiating this from access to data. *Id*.

Petitioner asserts a reasonably sufficient basis for obviousness in light of Yerazunis in combination with Fiore. First, we note that Petitioner relies, in the alternative, on Fiore for teaching the recited "file" limitations and Patent Owner does not address persuasively Petitioner's arguments related to

Fiore, other than arguing that Fiore does not disclose storing the files within the circular buffer.

On this record, Petitioner has demonstrated the similarities in the data recording systems of Yerazunis and Fiore, and has also established why a person of ordinary skill in the art would have reason to implement Fiore's memory-mapped filing system and indexing with the surveillance system of Yerazunis. Patent Owner alleges that the file system of Yerazunis is an anathema to Fiore because of its cessation of video recording. Based on the current record, it appears Patent Owner fixates on one embodiment of Yerazunis while other embodiments, such as the gun embodiment, advance continuous recording in line with Fiore's goal to avoid dropped frames.

Petitioner admits the lack of express use of "first file" language in Yerazunis, but demonstrates Yerazunis has defined areas of data storage in the circular buffer, which are equated to first files. We do not find Patent Owner's argument regarding Petitioner's broad use of the term file as sufficient evidence that the prior art does not teach this limitation. To the contrary, and based on the current record, Petitioner has shown that the use of file storage is a well-known approach for image data to be recorded in a circular buffer and therefore the concept that recorded data from the table retrieval system in Yerazunis is considered "as a first file" would be obvious to one skilled in the art. *See* Pet. 28–29. On the current record, we are also persuaded by Petitioner's arguments of a reasonable likelihood that one of ordinary skill in the art would have understood Yerazunis' disclosure of

compressing digitized frame data as teaching "using a digital video file format."[15]

In consideration of the above, we are persuaded for purposes of this Decision that Petitioner has cited sufficient evidence to demonstrate that a person of ordinary skill in the art would have had a rational basis to combine the teachings of Yerazunis and Fiore and this combination teaches these limitations of element 3.

> *f) Element 4: a protecting facility that responds to a signal to record the image data by designating a segment of the circular buffer as a write-protected portion and by indexing the write-protected portion as a second file in the circular buffer, wherein the segment includes a pre-recording subset recorded before the signal is received and a post-recorded subset to be recorded after the signal is received; and*

Petitioner argues Yerazunis, alone or combined with Fiore, discloses element 4 of claim 1, and element 3 and 4 of claim 12. Pet. 30 (citing Ex. 1003 ¶ 346).

Petitioner argues Yerazunis discloses event sensor 70, which generates a signal upon an event such as "upon discharge of the gun." Pet. 30 (citing Ex. 1017, 3:20–33, 8:8–25, 14:55–61). Petitioner contends Yerazunis further discloses microprocessor 54 detects the signal and causes "specified frame data associated with [the] firing event before and after the event" to be "preserved." *Id*. (citing Ex. 1017, 3:25–38, 8:26–30, 15:9–13).

---

[15] Although we do not rely on it for our Decision, we note that Fiore discloses that the video signal from a camera "may be compressed using known video compression algorithms MJPG or MPEG, for example." Ex. 1009 ¶ 44. This disclosure also supports Petitioner's contention that one of ordinary skill would have understood that the disclosure of compressed frame data teaches using digital video file format.

The preservation of the specified frame data is "stored within an unused portion of the circular buffer memory" ensuring it "cannot be overwritten as a result of further use of the gun or subsequent firing events." *Id*.

Additionally, Petitioner argues that although "Yerazunis does not *expressly* refer to 'indexing' write-protected segments as second files in the circular buffer," it would have been understood to a POSITA based on the teachings of Yerazunis. Pet. 31. Petitioner argues the use of tagging in Yerazunis's protecting facility, is a way to "identify a collection of data for write-protection" and later retrieval of video data. Pet. 30–31. Further, Petitioner argues that a POSITA would have understood that event data must be stored and retrieved, and that indexing such data was a well-known solution. Pet. 31.

Petitioner further argues that "to the extent a POSITA wanted further guidance as to particular methods for indexing of event data in Yerazunis's buffer, a POSITA would have been motivated to turn to Fiore." *Id*. (citing Ex. 1003 ¶¶ 168–172, 350). Petitioner argues that the "exemplary benefits" of Fiore would motivate a POSITA to implement the indexing file-based system of Fiore when the microcontroller 54 of Yerazunis is signaled to record. Pet. 32.

As to claim 12, Petitioner argues Yerazunis alone or combined with Fiore discloses elements 3 and 4 for the same reasons. *Id*. In addition, Petitioner argues a POSITA would have understood that in order to have a write-protected segment of the circular buffer it must "include[] a newly recorded portion of the buffer" to avoid being overwritten. *Id*. (citing Ex. 1003 ¶ 351; Ex. 1017, 2:19–23, 2:45–57, 17:9–20, 17:50–59). Further, Petitioner argues that Yerazunis and Fiore disclose that indexing occurs "during the step of recording," because "recording of data continues [during

and after a first firing event]," which is achieved by indexing. *Id*. (citing Ex. 1017, 17:45–50). Lastly, Petitioner argues that the second file is distinguished from the first file because as disclosed in Yerazunis and Fiore system the first file "may be a memory mapped file that implements the circular buffer, whereas the indexed second file comprises portion of the circular buffer that correspond to video data for a particular event." Pet. 32–33.

Patent Owner opposes Petitioner's argument. Prelim. Resp. 26. Patent Owner argues "Yerazunis does not disclose 'designated a segment of the circular buffer as a write-protected portion'" where claim 1 of the '882 patent "requires designating only a select segment of recorded data in the buffer as write-protected." *Id*. Patent Owner argues Yerazunis's preservation system "in response to a triggering signal" preserves the entire buffer "by ceasing to record over previously ***used*** (i.e., recorded) portion of the buffer." *Id*.

Second, Patent Owner argues that Yerazunis is limited by certain environmental factors that occur in embodiments directed to driving or gun use. *Id*. at 27. Further, Patent Owner argues that such limitations deal with shock and vibrations inherent in both setups of Yerazunis. Patent Owner argues Yerazunis solves this in the car embodiment through the use of a "simple 'buffer-record-and-stop' scheme," which the Patent Owner asserts means after detection of a triggering event, only a "small amount of additional video [is recorded], and then stops the recording altogether." *Id*. (citing Ex. 1017, 2:19–25). Patent Owner argues as that for the gun camera implementation of Yerazunis, the "system pre-designates portions of the memory" through use of head and tail pointers. *Id*. at 27–28. Patent Owner argues the use of this memory designation scheme "make clear, there is no

'write-protection' of a 'segment' within a circular buffer" and only uses "unused block of memory" for triggering events. *Id*. at 28. Patent Owner argues that this Yerazunis system is differentiated from claim 1 because of the designation of the segment as write-protection in response to the signal (claim 1 and claim 12) as compared to responding to a signal and recording to an unused portion then switching to a second unused portion to record. *Id*. Lastly, Patent Owner argues that Yerazunis's preservation step occurs after, but not during the step of continuing to record, requiring the video image data to be preserved through transfer of data to a "separate portion of . . . semiconductor memory" that is "nonvolatile" memory. *Id*. at 29 (citing Ex. 1017, 21:11, 21:59–22:5, 22:53–67).

Petitioner asserts a reasonably sufficient basis for obviousness in light of Yerazunis in combination with Fiore. On this record, Petitioner has demonstrated the similarities in the data recording systems of Yerazunis and Fiore. Petitioner asserts a reasonably sufficient basis for establishing the "specified frame data associated with [the] firing event" to be preserved as the disclosure of a designated segment that is write-protected. Based on the current record, we find Petitioner's evidence more persuasive than Patent Owner's assertion that Yerazunis preserves the entire buffer—not designated segments. Again, Petitioner admits Yerazunis does not expressly refer to "indexing write-protected segments as second files" but further establishes with sufficient basis that a person of ordinary skill in the art would understand the tagging features of Yerazunis aligns with the concept of indexing. Further, Petitioner shows that eventually it will be necessitated to locate or retrieve the data, providing further motivation for indexing, which is not only disclosed in Fiore, but demonstrated as well known in the art. *See* Pet. 28–29. Petitioner demonstrates the combination of Fiore and

Yerazunis reasonably support that indexing occurs during recording of data, thus, on the current record, we are not persuaded by Patent Owner's argument that Yerazunis only preserves post-recording data. Patent Owner further does not provide sufficient basis of reasoning that the "memory designation scheme" of Yerazunis which uses "unused block[s] of memory" establishes there is no write-protected segment.

In consideration of the above, we are persuaded for purposes of this Decision that Petitioner has cited sufficient evidence to demonstrate that person of ordinary skill in the art would have had a rational basis to combine the teachings of Yerazunis and Fiore and this combination teaches these limitations of element 4.

g) Element 5: wherein the local memory is configured to allow access to at least one of the files.

Petitioner argues that Yerazunis teaches this limitation of claim 1 and 12. Pet. 33 (citing Ex. 1003 ¶ 354). Petitioner argues that Yerazunis discloses serial output 78 functions to allow data download to an "external Personal Computer" for viewing, therefore disclosing that the DRAM 58 (i.e., local memory) "is configured to allow access to at least one of the files stored therein." *Id*. at 33–34 (citing Ex. 1017, 3:1–2, 6:45–51, 9:60–10:3, 18:60–66).

On this record, the cited evidence supports Petitioner's undisputed contention that Yerazunis in combination with Fiore teach this limitation.

4. *Dependent Claims*

Petitioner also contends that claims 2–11 and 13–22 would have been obvious over Yerazunis, alone or as combined with Fiore. Pet. 43–53.

Patent Owner does not offer any further argument, at this stage, addressing Petitioner's substantive showing as to these dependent claims.

We have reviewed Petitioner's contentions and the cited evidence, and we determine Petitioner has demonstrated a reasonable likelihood of prevailing as to the combination of Yerazunis and Fiore.

Moreover, as we preliminarily conclude that Petitioner demonstrates a reasonable likelihood of prevailing with respect to its obviousness challenge to independent claims 1 and 12, we institute review on all challenged claims on all grounds set forth in the Petition, including Petitioner's challenge to claims 7–10 and 19–20 as rendered obvious by Yerazunis and Fiore. *See* 37 C.F.R. § 42.108(a).

C. Ground 2a: Asserted Obviousness Over the Combination of Ely and Fiore

Petitioner contends that claims 1, 2, 4–6, 9, 11–18, and 21 would have been unpatentable as obvious over Ely in view of Fiore (labeled as Ground 2a). Pet. 53. Petitioner also argues that dependent claims 3, 7, 8, and 22 would be unpatentable over Ely, Fiore, and Lewellen (Ground 2b). Pet. 74. Petitioner contends that dependent claim 10 would have been unpatentable over Ely, Fiore and Mann (Ground 2c), and that dependent claims 19 and 20 would have been unpatentable over Yerazunis, Fiore, and Fiedler (Ground 1d). Pet. 77.

Having considered the arguments and evidence presented by the parties, we determine that Petitioner has shown a reasonable likelihood of prevailing on its assertion that the challenged claims would have been unpatentable as obvious over the cited references for the reasons explained below.

1. *Overview of Ely (Ex. 1020)*

Ely is a patent titled "Distributed Video Data Storage in Video Surveillance System," which was published November 9, 1999, and thus alleged to be prior art under § 102. Pet. 53.

Ely relates to a video surveillance system with a network that allows connection from a plurality of cameras and sensor devices to a host computer and central control station. Ex. 1020, Abstract. The objective of the invention being to "provide a video surveillance system having an improved capability for storage of video signals." *Id.* at 2:34–36. This includes the use of the storage devices as ring buffers that are capable of inhibiting over-writing of digital video data in storage in response to a storage signal by the central station that receives a transmission of an alarm signal for the sensor device to the central station. *Id.* at 3:5–15. In response to an alarm signal, live and buffered digital video signals can be transmitted in compressed form to the central station from the storage device controlled by the selected control device. *Id.* at Abstract, 3:23–28.

Analog video signals from camera 130 are routed to memory board 136, where they are converted by digitizer 146 and coder/decoder 148, e.g., according to the H.261 digital video compression standard, and are stored in a RAM, EEPROM, or flash memory device 150. *Id.* at 6:48–7:11. Control circuit 134 controls addressing and writing of video data into memory 150, such that the memory functions as a ring buffer. *Id.* at 7:28–31, Fig. 4. In ring buffer 150 currently generated compressed video data overwrites the oldest compressed video data until the occurrence of an alarm event inhibits such overwriting; live compressed video is then written into a portion of memory device 150 that does not hold video data to be preserved. *Id.* at 7:31–38; Fig. 4. In operation, controller 134 carries out process 160 to

protect against overwriting stored compressed digital data in ring buffer 150 that corresponds to a time interval beginning at a predetermined time before receipt of the alarm command and continuing for a predetermined time after receipt of the alarm command. *Id.* at 7:45–55, Fig. 4. The protected data is then available for retrieval, display, and permanent recording via VCR 110. *Id.* at 10:11–23. In response to a clear command, the control circuit removes a previously protected block of stored video data from protection, thereby permitting live video data to write over the now unprotected stored video data. *Id.* at 8:7–12.

2. *Independent Claims 1 and 12*

Independent claim 1 is directed to a surveillance apparatus, and independent claim 12 is a method claim with similar limitations and in such case, in view of these similarities, claims 1 and 12 are addressed together. Pet. 19. Petitioner presents contentions that claim 1 would have been obvious over the combined teachings of Ely and Fiore. Pet. 18 (combination), 19–34 (claim 1).

Patent Owner opposes. Prelim. Resp. 39–47. More specifically, Patent Owner contends Ely fails to teach two key requirements of the '882 patent: (1) selective write-protection within a circular buffer, (2) storing of data corresponding to an event signal as a distinct file within the buffer. *Id*. Patent Owner further argues the combination of Fiore with Ely does not remedy this deficiency. *Id*.

a) Motivation to Combine

Petitioner argues a POSITA would be motivated to combine the surveillance system of Ely with the circular storage buffer and event data "file-based approach" of Fiore. Pet. 55. Similar to Petitioner's argument in Ground 1 (*see above* Section X.B.3a.), Petitioner argues a POSITA would

have been motivated to combine Ely and Fiore due to their similar technologies and similar solutions. *Id*. (citing Ex. 1020, 6:51–53, 6:61–65, 7:28–39, 7:48–55; Ex. 1009, Abstract, ¶ 48). Additionally, a POSITA would have been motivated to implement the file-based memory mapping approach and indexing event data files within the circular storage buffer of Fiore with the surveillance system of Ely. *Id*. Petitioner argues that a POSITA would have a reasonable expectation of success as Fiore provides a detailed description of such system. Pet. 55–56.

Petitioner further argues that a POSITA would have a reasonable expectation of success in combining Ely and Fiore because it would have been "routine and well within a POSITA's skill" to apply the detailed disclosure of the "file-based approach" of Fiore to Ely's surveillance system. Pet. 56.

Patent Owner disagrees with Petitioner and asserts Petitioner "has failed to meet its burden of showing that a POSITA would have been motivated to combine Ely with Fiore" to arrive at the inventions of claims 1 and 12. Prelim. Resp. 43. Patent Owner argues Ely and Fiore are incompatible due to differing storage goals. *Id*. at 44. First, Patent Owner argues that Ely discloses permanent recording through use of conversion from the "ring buffer" to "analog video for storage onto a video tape" which Patent Owner asserts is contradictory to Fiore's utilization of "a circular storage buffer during recording in which recent data over-write the older data." *Id.* at 44–45. Patent Owner distinguishes that Fiore is not directed to the "'tape recording type' system described in Ely" and therefore the goal of Ely to use "analog storage would be thwarted" if combined with Fiore. Patent Owner asserts that "[a] digital data '***file***' is not stored on video tape." *Id*. at 44–45.

Additionally, Patent Owner argues a POSITA would not look to Fiore for "guidance on a system to selectively write-protect data segments on a circular buffer" because Fiore does not disclose "selectively write-protecting segments of data within a circular buffer." *Id*. at 45. Patent Owner argues, that similar to Ely, Fiore "teaches that individual event data may be transferred to different memory location" but nowhere "suggest[s] selectively write-protecting segments of data within a circular buffer." *Id*. (citing Ex. 1009 ¶ 48). Patent Owner further argues Fiore "expressly" discourages "[t]he idea of storing individual event files within temporary storage" and therefore does not disclose "creating or storing individual event files." *Id*. at 46. Patent Owner argues that Petitioner "conflate[s] Fiore's use of event time-stamps to create event files" with indexing "files within the memory-mapped file" which is not disclosed in Fiore. *Id.* Lastly, Patent Owner asserts that the goal of Fiore to "avoid such 'multi-tasking' demands on a processor controlling memory access" conflicts with the combination of Ely and Fiore to "arrive at a system that creates and stores individual event files on a circular buffer." *Id*. at 47.

Similar to arguments Patent Owner advanced concerning the combination of Yerazunis and Fiore, addressed above, Patent Owner again argues that Fiore does not teach selectively write protecting segments of data within a buffer, and that Petitioner conflates storing individual event files within a buffer with Fiore's memory mapped files. Prelim. Resp. 43–47. We address these arguments more with respect to Elements 3 and 4 below. *See* Section X.C.2.e–f. As discussed below, we determine that Petitioner has demonstrated a person of ordinary skill would have had reason to combine the teachings of Ely and Fiore.

b) Preamble: a surveillance apparatus comprising:

Petitioner argues that Ely teaches this limitation. Pet. 56 (citing Ex. 1003 ¶ 404). Petitioner argues Ely discloses a "surveillance apparatus" of claim 1, because Ely discloses a "video surveillance system" which includes a "central control station and video cameras each mounted inside a dome housing unit." *Id*. (citing Ex. 1020, Abstract; Ex. 1003 ¶ 404). Additionally, Petitioner argues Ely discloses "processing imaged data from a camera" of claim 12, as Figure 4 illustrates the "operation of camera unit 114" which a POSITA would have understood to include this limitation. *Id*.

On this record, the cited evidence supports Petitioner's undisputed contention that Ely teaches this limitation.

c) Element 1: a camera having an image capturing component that captures image data;

Petitioner argues that Ely teaches this limitation for claims 1 and 12. *Id*. at 57 (citing Ex. 1003 ¶ 406). Petitioner argues Ely discloses an "imaging capturing component" of claim 1 because within camera 130 an "image formed by the optical system 138 is converted into an electrical signal at CCD 142" and camera 130 is coupled to memory board 136 that includes video digitizer circuit 146. *Id*. at 57–58 (citing Ex. 1020, 6:21–28). Petitioner argues a POSITA would have understood video digitizer circuit 146 outputs "digitized video comprising images" and would therefore equate this to outputting "image data." Pet. 58 (citing Ex. 1020, 6:48–7:11, Ex. 1003 ¶ 406).

Additionally, Petitioner argues Ely also discloses "video data" for element 1 of claim 12 because the video digitizer 146 output contains "video data from the camera in digital form." *Id*. (citing Ex. 1003 ¶ 407).

On this record, the cited evidence supports Petitioner's undisputed contention that Yerazunis in combination with Fiore teach this limitation.

d) Element 2: a local memory functionally coupled to the camera;

Petitioner argues that Ely teaches this limitation. Pet. 59 (citing Ex. 1003 ¶ 408). Petitioner argues Ely discloses a "local memory" as memory board 136 includes memory device 150. *Id*. (citing Ex. 1020, 6:17–21, 6:48–53, 6:61–65). Petitioner further argues Ely discloses camera 130 is coupled to memory board 136, and that the memory board is "configured 'to receive an analog video signal output from the camera 130 and to digitize, compress and store the video signal' in memory device 150." *Id*. (citing Ex. 1020, 6:48–65). Petitioner therefore argues that a POSITA would have understood the configuration between the camera 130 and memory device 150 would be through use of only physical connectors less than 20 cm from the camera 130. *Id*. (citing Ex. 1003 ¶ 410).

On this record, the cited evidence supports Petitioner's undisputed contention that Yerazunis in combination with Fiore teach this limitation.

e) Element 3: a recording facility that records the image data into available portions of a circular buffer in the local memory as a first file using a digital video file format;

Petitioner argues that Ely, alone or in combination with Fiore, teaches this limitation. Pet. 60; Ex. 1003 ¶ 411. Petitioner argues Ely discloses a surveillance system which includes a "video data buffer memory, storing compressed video data generated by the camera" mounted with each camera. *Id.* (quoting Ex. 1020, Abstract). In addition, Petitioner states Ely discloses that "memory 150 serves as a ring buffer, in which currently generated compressed video data is written over the oldest compressed video data."

Id. (quoting Ex. 1020, 7:28–34). Petitioner further argues that a POSITA would understand that use of compressed video data equates to "using a digital video file format" and that "ring buffer" means a "circular buffer" described in the '882 patent. *Id*.

Petitioner notes that although "Ely never *expressly* refers to recording the image data into the circular buffer 'as a first file,' a POSITA," it does disclose storage of alarm data for "subsequent, selective 'retrieval, display, and permanent recording." Pet. 61 (citing Ex. 1003 ¶ 412). Petitioner argues Ely discloses a camera system that responds to alarm commands to protect pre- and post-alarm data. Pet. 60 (citing Ex. 1020, 10:11–17). Petitioner asserts Ely goes further to state data can be "selectively retrieved in response to user instruction for either display (block 180) or directly for taperecording (block 182)" and that a POSITA would find it obvious to record such selected data "as a first file." Pet. 61 (citing Ex. 1020, 10:17–23; Ex. 1003 ¶ 412).

Additionally, Petitioner argues a POSITA looking for "further guidance as to particular methods for recording image data as files in Ely's ring buffer, [] would have been motivated to turn to Fiore." Pet. 61 (citing Ex. 1003 ¶ 413). Petitioner argues the memory-mapped filing system of Fiore "index[es] collections of frame data for respective events as files within the memory-mapped file." *Id*. (citing Ex. 1009 ¶¶ 22, 23, 51, 59, 60). Petitioner argues that a POSITA would have been motivated to implement Ely's control circuit 134 along with the Fiore filing system because it allows "playback of video data for a specific event from the circular buffer without interrupting simultaneous recording of new video data into the buffer." *Id*. (citing Ex. 1009 ¶¶ 65, 67–68, 72). Petitioner asserts that because of the exemplary benefits of Fiore, a POSITA would be motivated to combine Ely

with Fiore to record the image data "as a first file" in the manner Fiore discloses. Pet. 62.

Patent Owner opposes Petitioner and argues that Ely does not expressly recite the claimed "*file* storage *in the buffer*." Prelim. Resp. 41. Patent Owner argues file-based storage is incompatible with Ely's final goal of analog storage in videotape and that analog storage format is inconsistent with "digital data in computer memory 'as a file.'" *Id*. Patent Owner further argues Petitioner's assertion that a POSITA would equate compression of frame data with a digital file format is conclusory and unsupported because their expert declaration does not provide explanation for why a POSITA would have such an understanding. *Id*. at 42. Additionally, Patent Owner argues that Petitioner's concession that the image data recorded into the circular buffer is not expressly referred to "as a file" equates to an admission that compression of frame data could not be considered a digital video file. *Id*. (quoting Pet. 67).

Further, Patent Owner argues Ely (and Fiore) fails to disclose "indexing the write-protected portion as second distinct file in the circular buffer." *Id*. at 42–43. Patent Owner opposes Petitioner's assertion that a POSITA would find it obvious to store the "alarm data" in Ely's ring buffer as a first-file for "subsequent, selective 'retrieval, display, and permanent recording.'" *Id*. at 43 (quoting Pet. at 61). Patent Owner further argues Petitioner oversimplifies the claimed definition of file, contradicting logic and extrinsic evidence that the proper construction in the prosecution history of the '882 patent predecessor, which Patent alleges is to "*facilitate [the] exchange of data*." *Id*. (citing Ex. 1013, at 285–286). Patent Owner argues Ely serial transfers data for "ultimate storage linearly onto videotape" instead of data being "stored within and transferred out of the circular buffer

as a data 'file'" as required by the '882 patent. *Id*. (citing Ex. 1020, 3:37–46, 4:36–48, 12:37–46).

Petitioner asserts a reasonably sufficient basis for obviousness in light of Ely in combination with Fiore. On this record, Petitioner has demonstrated the similarities in the data recording systems of Ely and Fiore, establishing a person of ordinary skill in the art would have reason to implement Fiore's memory-mapped filing system and indexing with the surveillance system of Ely. Patent Owner alleges Ely and Fiore are incompatible because Ely's final goal of analog storage in videotape is inconsistent with the digital data of Fiore. Petitioner sufficiently shows that a person of skill in the art would understand that use of compressed frame data equates to digital video file format. Similarly, Petitioner establishes a sufficient basis that a ring buffer of Ely is akin to a circular buffer of Fiore and the '882 patent. Petitioner notes Ely lacks the express use of "as a first file," (as claimed) but sufficiently demonstrates Ely teaches the storage of data for subsequent, selective retrieval, display, and permanent recording making it obvious to a person skilled in the art that such data would be considered "as a first file."

In consideration of the above, we are persuaded for purposes of this Decision that Petitioner has cited sufficient evidence to demonstrate that a person of ordinary skill in the art would have had a rational basis to combine the teachings of Ely and Fiore and this combination teaches these limitations of element 3.

> *f) Element 4: a protecting facility that responds to a signal to record the image data by designating a segment of the circular buffer as a write-protected portion and by indexing the write-protected portion as a second file in the circular buffer, wherein the segment includes a pre-*

> *recording subset recorded before the signal is received and a post-recorded subset to be recorded after the signal is received; and*

Petitioner argues Ely, alone or combined with Fiore, discloses element 4 of claim 1, and element 3 and 4 of claim 12. Pet. 62 (citing Ex. 1003 ¶ 414). Petitioner argues Ely discloses a control circuit 134 that "protects from over-writing compressed digital video data previously stored in the memory 150" when an alarm command is received. *Id.* (citing Ex. 1020, 7:48–55). Petitioner further asserts Ely discloses the write-protected data (also known as "alarm data") as corresponding to a time interval in relation to the alarm command, and once compressed "can be selectively retrieved in response to user instruction." *Id*. (citing Ex.1020, 10:17–23). Additionally, Petitioner argues that while Ely does not *expressly* refer to alarm data as "file" it would have been understood to a POSITA that in order to selectively retrieve the data necessitates the ability to locate the alarm data within the buffer. Pet. 62–63.

Further, Petitioner argues that a POSITA would have understood that in order to retrieve selective alarm data, Ely's storage of alarm data in the buffer necessitates a solution such as "indexing," which according to Petitioner is a "well-known approach." Pet. 63.

Petitioner further argues that "[t]o the extent a POSITA wanted further guidance on the indexing of alarm data as files in Ely's ring buffer, a POSITA would have been motivated to turn to Fiore." *Id*. (citing Ex. 1003 ¶ 417). Petitioner argues that the "exemplary benefits" of Fiore would motivate a POSITA to implement the indexing file-based system of Fiore with control circuit 154 of Ely so that in response to a signal, write-protected

portions of the record would be indexed as a second file in the circular buffer. *Id*.

As to Claim 12, Petitioner argues Ely alone or combined with Fiore teaches elements 3 and 4 for the same reasons. *Id*. In addition, Petitioner argues a POSITA would have understood that in order to have a write-protected segment of the circular buffer it must "include[] a newly recorded portion of the buffer" to avoid being overwritten. *Id*. (citing Ex. 1003 ¶ 418; Ex. 1020, 7:48–55, 10:11–15.). Further, Petitioner argues that Ely and Fiore disclose that indexing occurs "during the step of recording," because "control circuit 134 is also conditioned . . . to receive commands calling for reading-out and transmission to the central station of previously-stored compressed video data." Pet. 64 (citing Ex. 1020, 7:56–59). Petitioner argues a POSITA would have understood in order to have selective retrieval and transmission of alarm data without interrupting ongoing storage, it necessitates the control circuit to index the alarm data while continuing to record. *Id*. (citing Ex. 1003 ¶ 419). Lastly, Petitioner argues that the second file is distinguished from the first file because, as disclosed in Ely and Fiore, the first file "may be the memory mapped file that implements the circular buffer, whereas the indexed second file comprises portion of the circular buffer that correspond to video data for a particular event (*e.g*. alarm data)." *Id*.

Patent Owner disagrees with Petitioner, asserting that Ely fails to teach the concept of claim 1 regarding a "designating a segment of the circular buffer as a write-protected portion." Prelim. Resp. 39. Patent Owner argues that in contrast to the '882 patent, Ely discloses the concept of "'*inhibiting*' the overwriting of previously recorded data in response to an event signal." *Id*. (citing Ex. 1020, 2:65–3:16, 4:1–8). Patent Owner argues

that Ely discloses storing new data "into a different '*portion of the memory*' in order to preserve previously captured data" which is at odds with element 4 of claim 1. *Id*. at 40 (citing Ex. 1020, 7:28–38). Patent Owner argues Petitioner does not support their argument that Ely discloses the concept of write-protecting a "segment" because the Petitioner's use of protected alarm data transmission does "not describe the granularity of a write-protection operation in the buffer." *Id*.

Petitioner asserts a reasonably sufficient basis for obviousness in light of Ely in combination with Fiore. On this record, Petitioner has demonstrated the similarities in the data recording systems of Ely and Fiore. Again, Petitioner notes Ely does not expressly refer to alarm data as "file." Based on the current record, however, Petitioner establishes with reasonable certainty that selectively retrieving the alarm data corresponding to a time interval in relation to an alarm command teaches a designated segment that is write-protected. Further, Petitioner argues that eventually it will be necessary to locate the data, which supports indexing as such function was well known in the art. On this limited record, Patent Owner's argument does not show that the inhibition of overwriting in Ely is at odds with the designation of a segment of the circular buffer as a write-protected portion as required by claim 1.

In consideration of the above, we are persuaded for purposes of this Decision that Petitioner has cited sufficient evidence to demonstrate that a person of ordinary skill in the art would have had a rational basis to combine the teachings of Ely and Fiore and this combination teaches these limitations of element 4.

g) Element 5: wherein the local memory is configured to allow access to at least one of the files.

Petitioner argues that Ely teaches this limitation of claim 1 and 12. Pet. 65 (citing Ex. 1003 ¶ 421). Petitioner argues Ely discloses "memory 150 (i.e., local memory) is configured to allow access to at least one of the files stored therein." Petitioner argues Ely discloses that after the alarm signal and data is "selectively protected from overwriting" it can then be "retrieved for display or tape-recording by the central control station" which Ely further discloses the user having the option to record the retrieved data on a VCR or digital video tape recorded. *Id*. at 65 (citing Ex. 1020, 9:51–58, 10:24–47).

On this record, the cited evidence supports Petitioner's undisputed contention that Yerazunis in combination with Fiore teach this limitation.

3. *Dependent Claims*

Petitioner also contends that claims 2–11 and 13–22 would have been obvious over Ely, alone or as combined with Fiore. Pet. 67–80.

At this stage, Patent Owner does not offer any further argument addressing Petitioner's substantive showing as to these dependent claims. We have reviewed Petitioner's contentions and the cited evidence, and we determine Petitioner has demonstrated a reasonable likelihood of prevailing as to the combination of Ely and Fiore.

Moreover, as we preliminarily conclude that Petitioner demonstrates a reasonable likelihood of prevailing with respect to its obviousness challenge to independent claims 1 and 12, we institute review on all challenged claims on all grounds set forth in the Petition, including Petitioner's challenge to claims 2–11 and 13–22 as rendered obvious by Ely and Fiore. *See* 37 C.F.R. § 42.108(a).

XI. CONCLUSION

The Supreme Court held that a final written decision under 35 U.S.C. § 318(a) must decide the patentability of all claims challenged in the petition. SAS, 138 S. Ct. at 1348. After considering the evidence and arguments presented in the Petition, we determine that Petitioner has a reasonable likelihood of success in proving that at least one claim of the '882 patent is unpatentable. Accordingly, we institute an *inter partes* review of all claims and all grounds set forth in the Petition. *See* 37 C.F.R. § 42.108(a) ("When instituting . . . review, the Board will authorize the review to proceed on all of the challenged claims and on all grounds of unpatentability asserted for each claim.").

At this stage of the proceeding, we have not made a final determination as to the patentability of any challenged claim or as to the construction of any claim term.

XII. ORDER

In consideration of the foregoing, it is hereby:

ORDERED that, pursuant to 35 U.S.C. § 314(a) an *inter partes* review of the ’882 patent is hereby instituted, commencing on the entry date of this Order, and pursuant to 35 U.S.C. § 314(c) and 37 C.F.R. § 42.4, notice is hereby given of the institution of a trial.

FURTHER ORDERED that the trial is authorized on all grounds set forth in the Petition.

FURTHER ORDERED that the trial will be conducted in accordance with a corresponding separately issued Scheduling Order.

FOR PETITIONER:

Joshua R. Nightingale
John A. Marlott
JONES DAY
jrnightingale@jonesday.com
jamarlott@jonesday.com

FOR PATENT OWNER:

Jason M. Shapiro
Timothy Devlin
Jim Lennon
DEVLIN LAW FIRM LLC
jshapiro@devlinlawfirm.com
tdevlin@devlinlawfirm.com
jlennon@devlinlawfirm.com
Stellar-DLF_Intl@devlinlawfirm.com
dlflitparas@devlinlawfirm.com