US007933431B2

(12) **United States Patent**
Pryor

(10) **Patent No.: US 7,933,431 B2**
(45) **Date of Patent: Apr. 26, 2011**

(54) **CAMERA BASED SENSING IN HANDHELD, MOBILE, GAMING, OR OTHER DEVICES**

(76) Inventor: **Timothy R. Pryor**, Tecumseh (CA)

(*) Notice: Subject to any disclaimer, the term of this patent is extended or adjusted under 35 U.S.C. 154(b) by 0 days.

(21) Appl. No.: **12/834,281**

(22) Filed: **Jul. 12, 2010**

(65) **Prior Publication Data**

US 2010/0277412 A1 Nov. 4, 2010

Related U.S. Application Data

(63) Continuation of application No. 11/980,710, filed on Oct. 31, 2007, now Pat. No. 7,756,297, which is a continuation of application No. 10/893,534, filed on Jul. 19, 2004, now Pat. No. 7,401,783, which is a continuation of application No. 09/612,225, filed on Jul. 7, 2000, now Pat. No. 6,766,036.

(60) Provisional application No. 60/142,777, filed on Jul. 8, 1999.

(51) **Int. Cl.**
G06K 9/00 (2006.01)

(52) **U.S. Cl.** **382/103**; 382/104; 348/207.1

(58) **Field of Classification Search** 382/103, 382/104; 348/207.1
See application file for complete search history.

(56) **References Cited**

U.S. PATENT DOCUMENTS

5,878,174	A *	3/1999	Stewart et al.	382/293
6,342,917	B1 *	1/2002	Amenta	348/207.1
6,453,180	B1 *	9/2002	Endoh et al.	455/567
6,597,817	B1 *	7/2003	Silverbrook	382/289

* cited by examiner

Primary Examiner — Tom Y Lu
(74) *Attorney, Agent, or Firm* — Warner Norcross & Judd LLP

(57) **ABSTRACT**

Method and apparatus are disclosed to enable rapid TV camera and computer based sensing in many practical applications, including, but not limited to, handheld devices, cars, and video games. Several unique forms of social video games are disclosed.

31 Claims, 22 Drawing Sheets

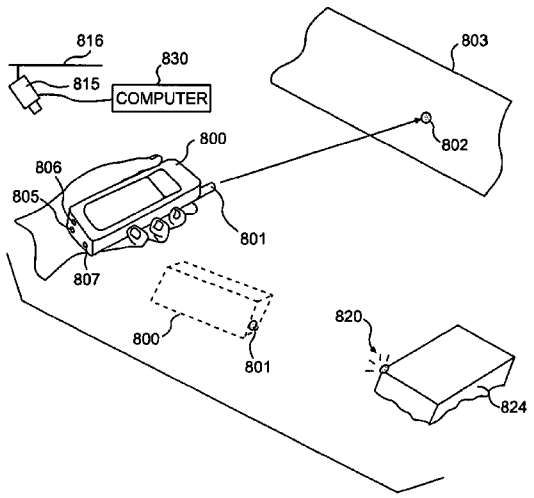

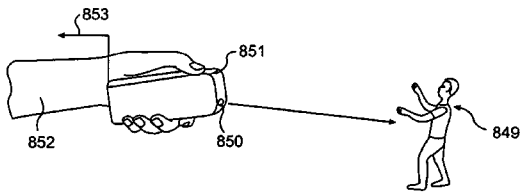

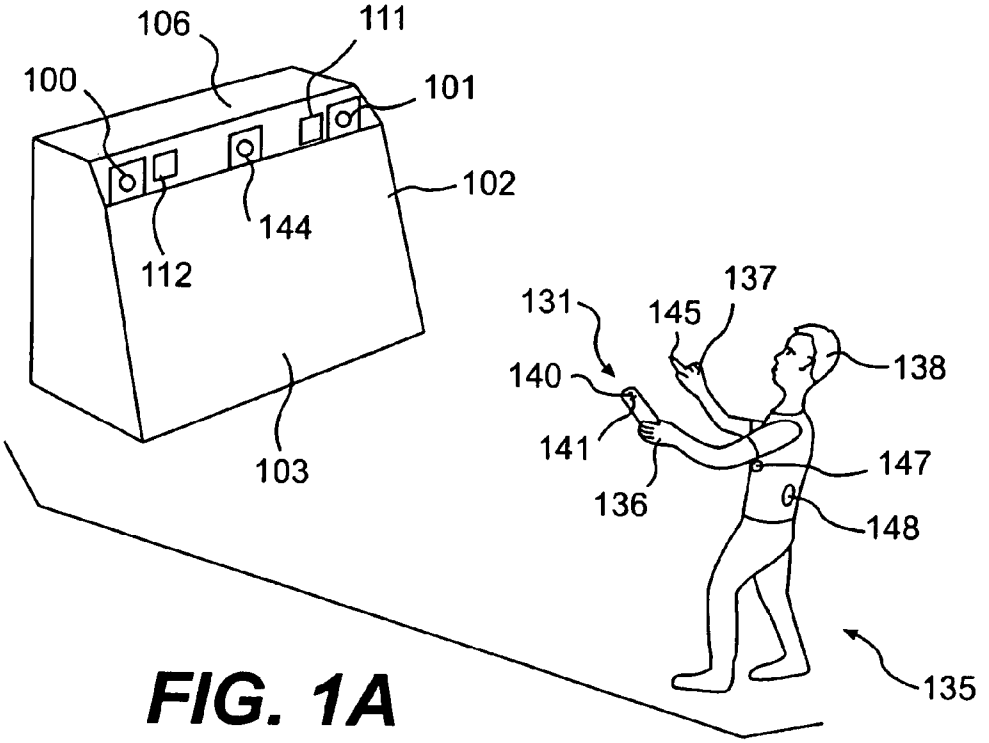

FIG. 1A

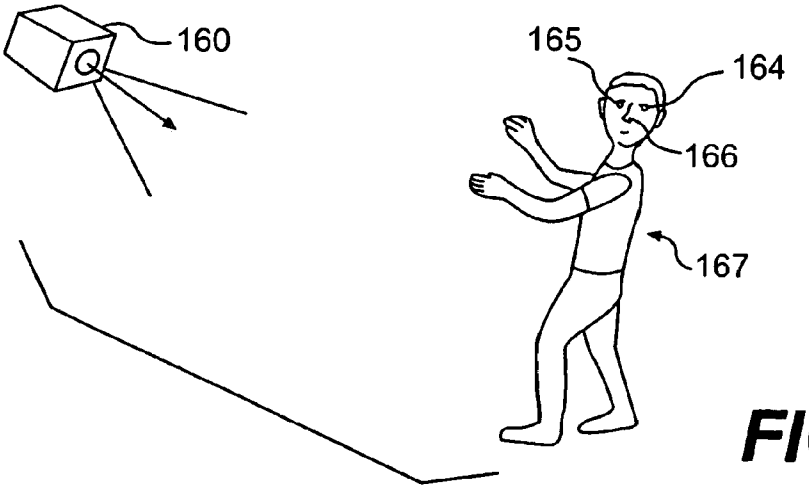

FIG. 1B

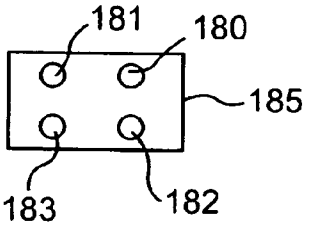

FIG. 1C

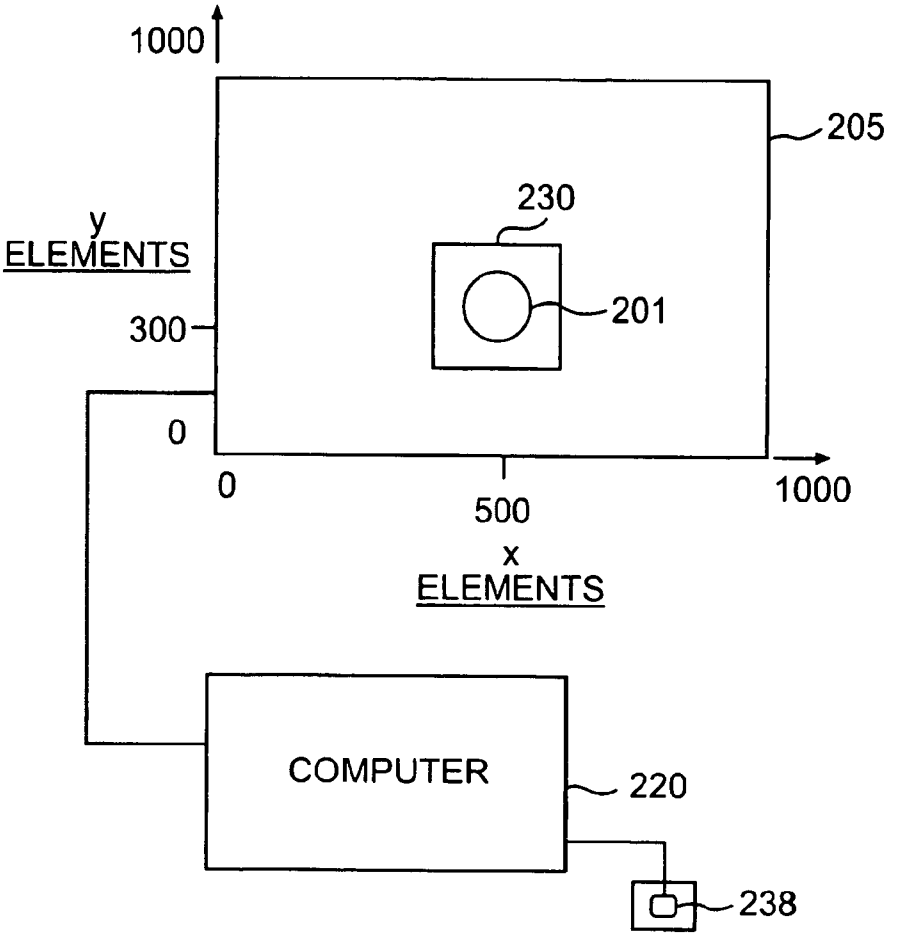
1000
205
230
y
ELEMENTS
201
300
0
0
500
1000
x
ELEMENTS
COMPUTER
220
238

FIG. 2A

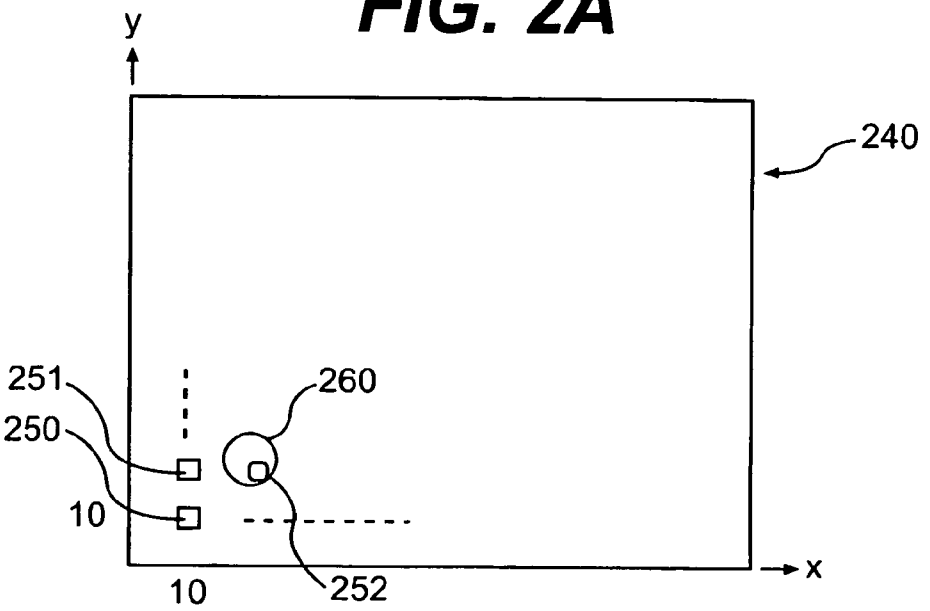
y
240
251
260
250
10
10
252
x

FIG. 2B

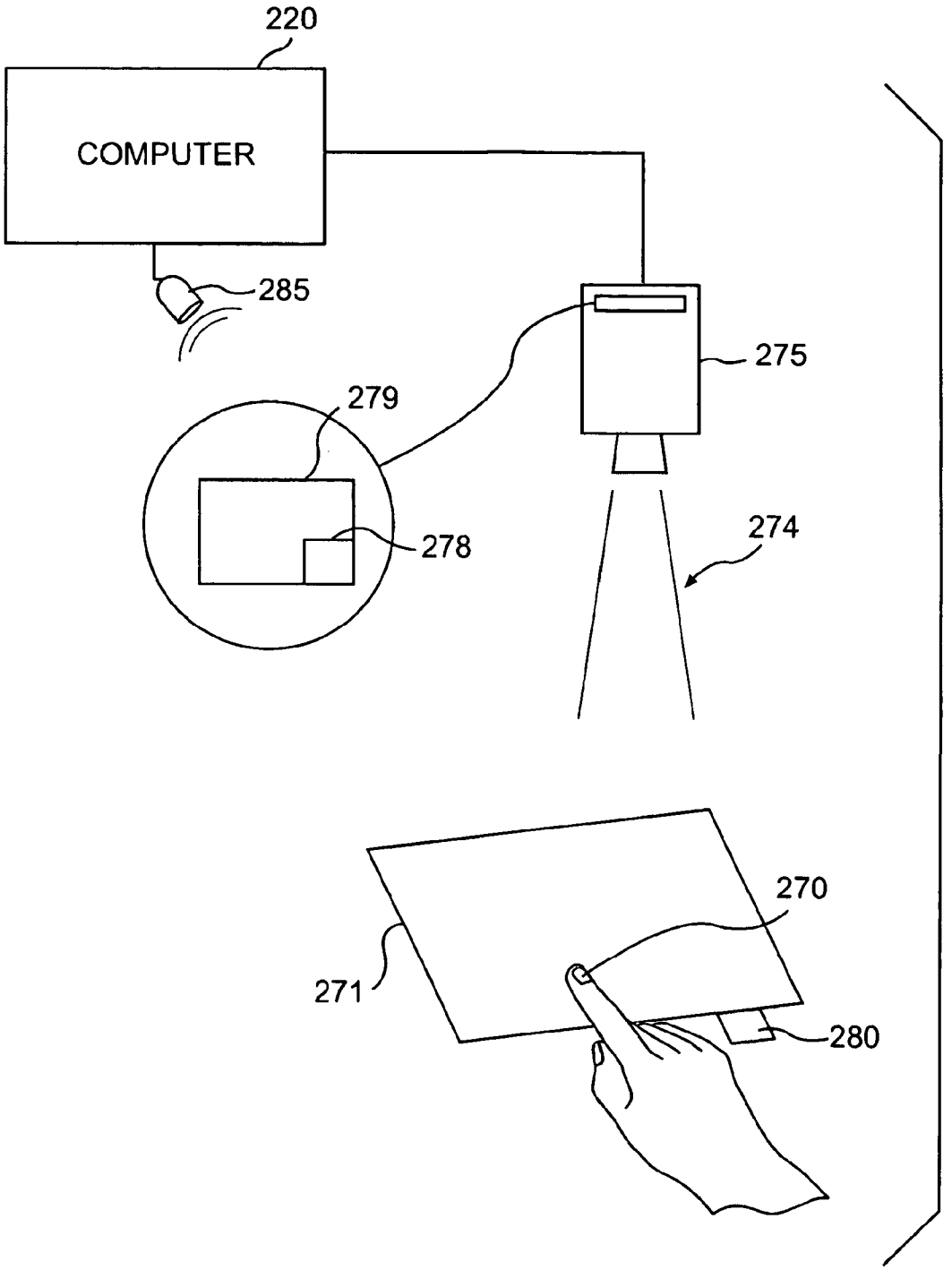

FIG. 2C

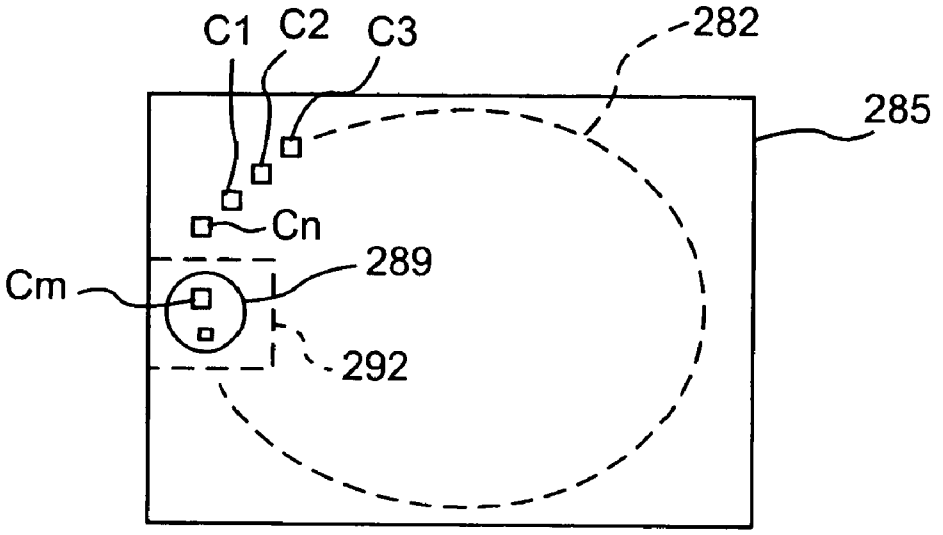

FIG. 2D

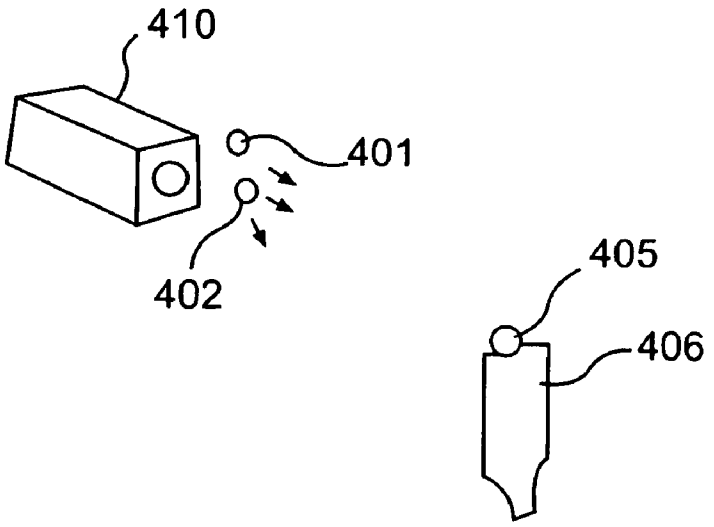

FIG. 4A

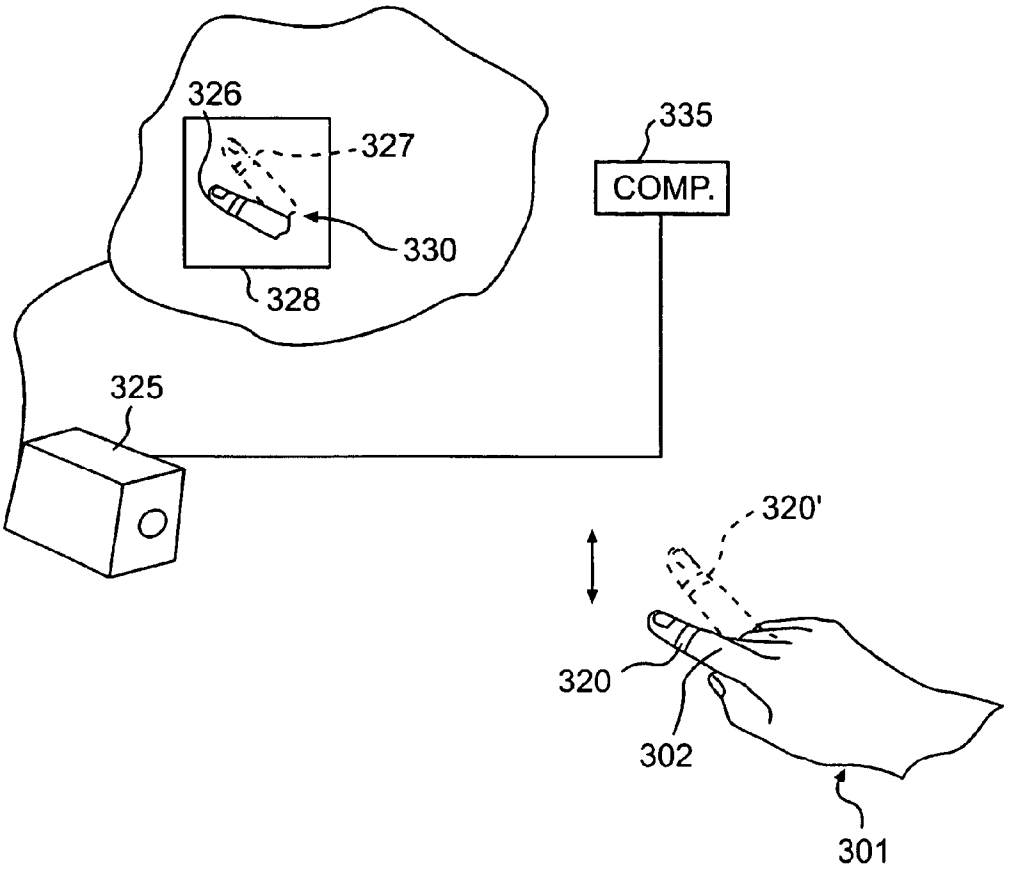

FIG. 3A

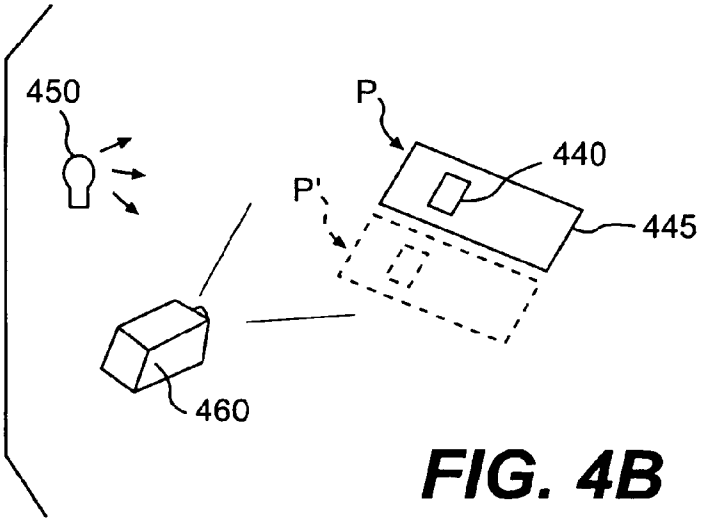

FIG. 4B

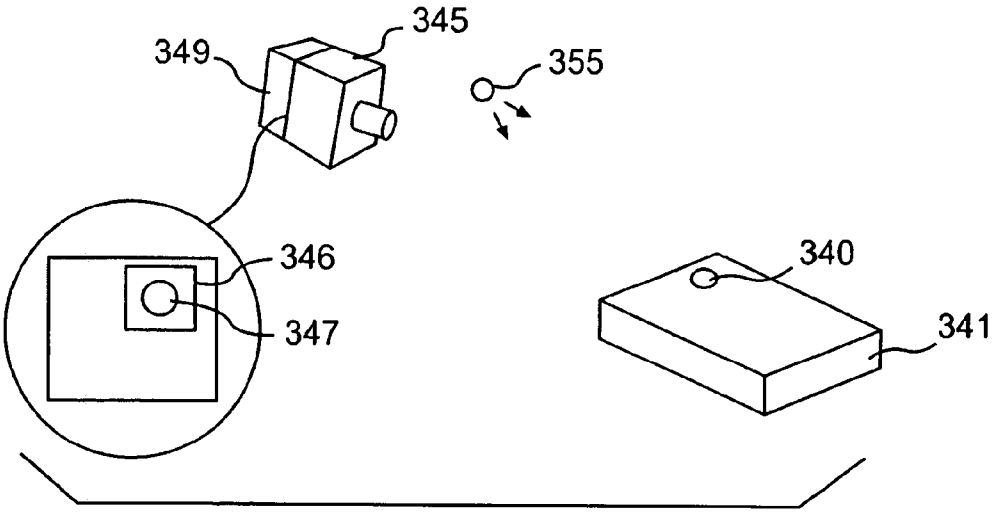

FIG. 3B

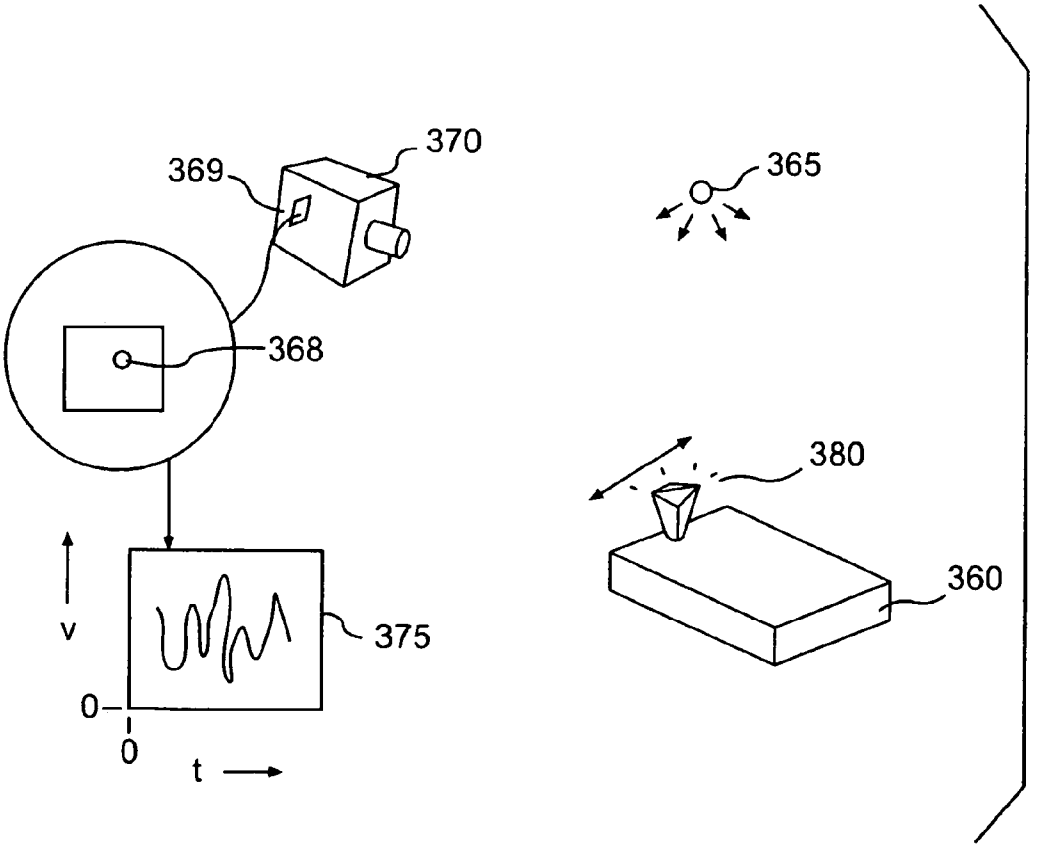

FIG. 3C

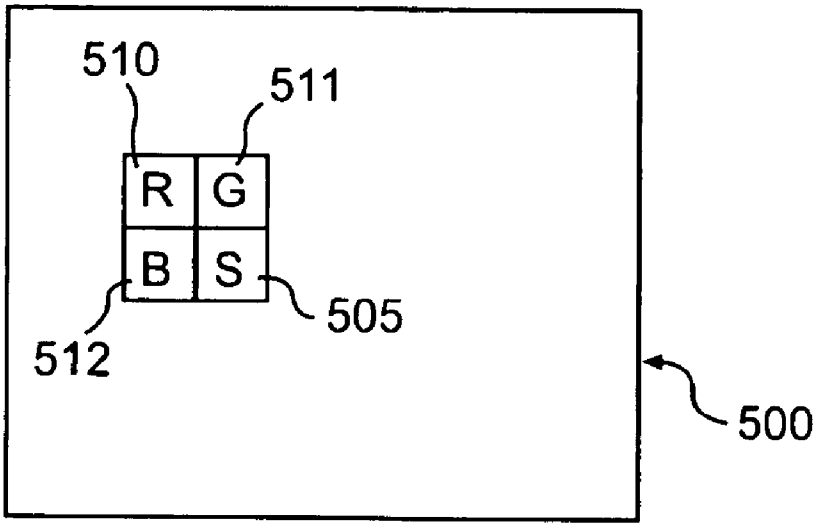

FIG. 5A

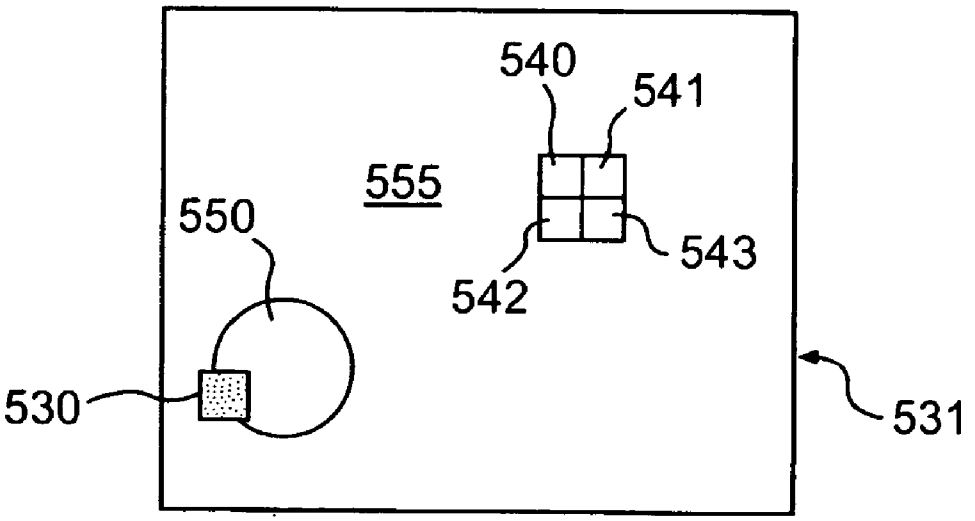

FIG. 5B

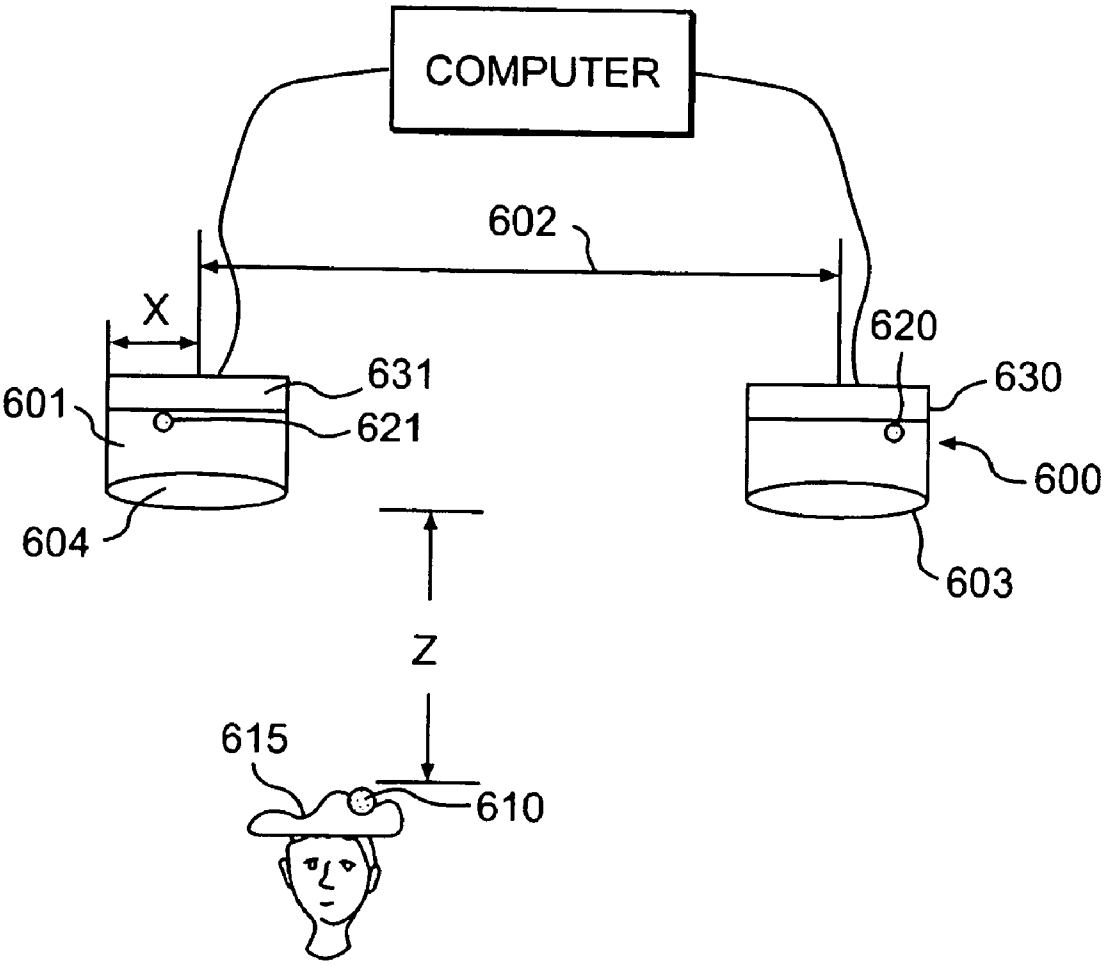

FIG. 6

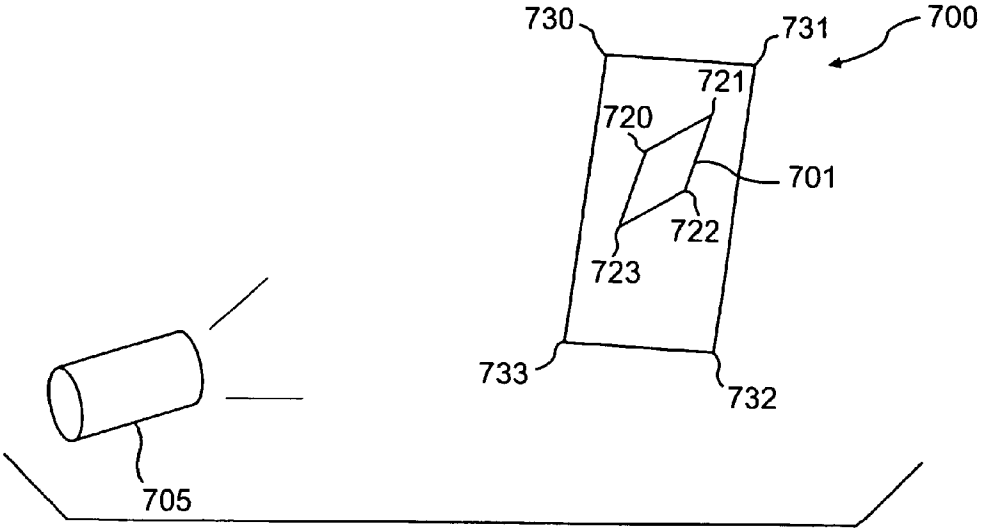
730
731
700
721
720
701
722
723
733
732
705

FIG. 7

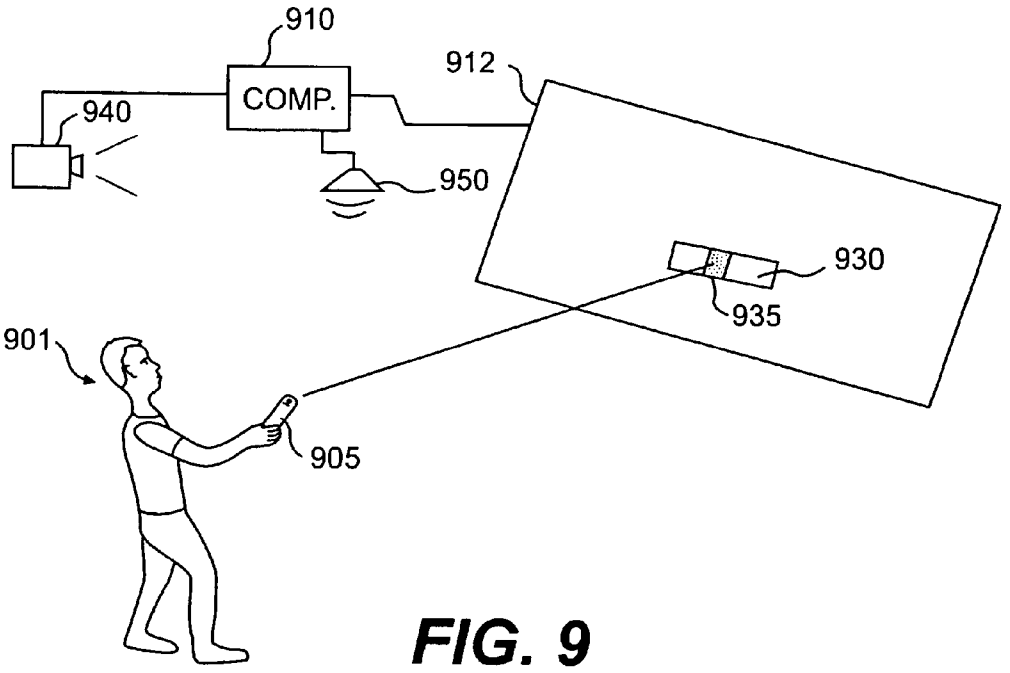
910
COMP.
912
940
950
930
935
901
905

FIG. 9

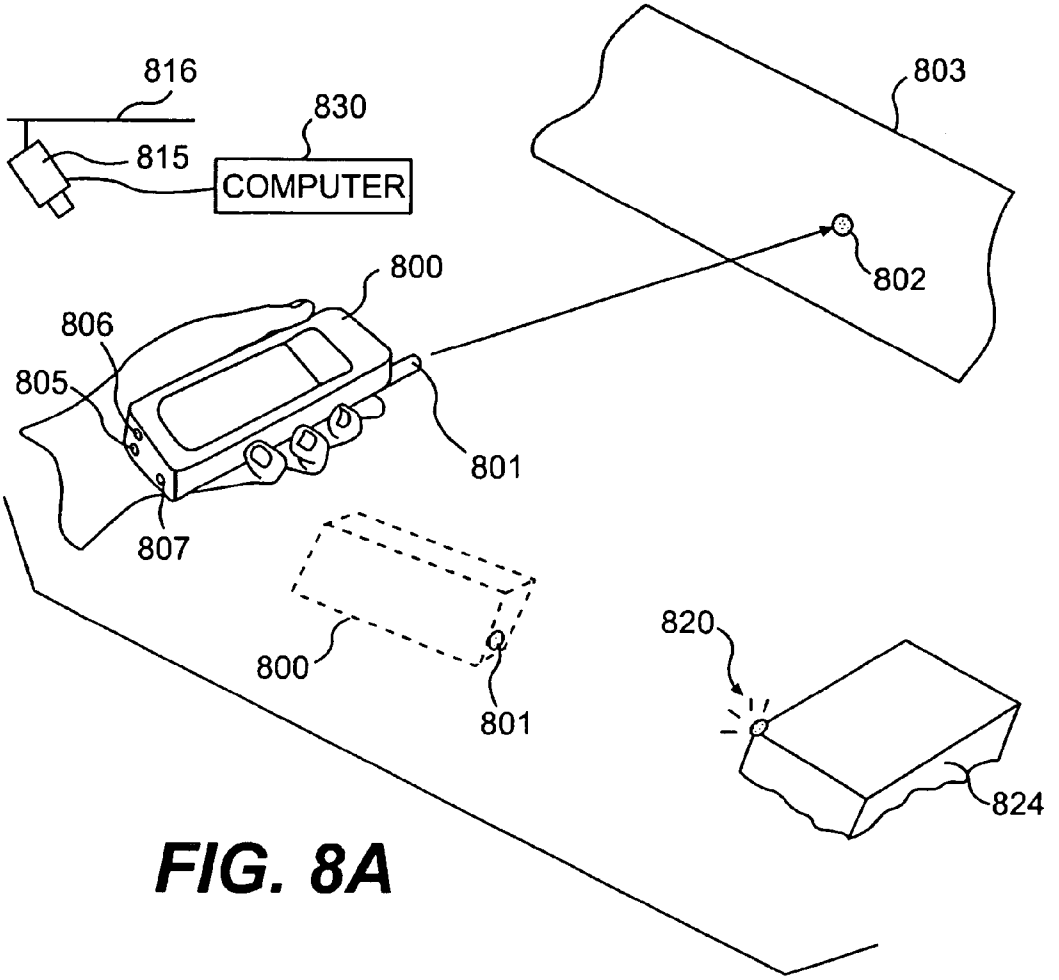
816
830
815
COMPUTER
803
800
802
806
805
801
807
800
801
820
824

FIG. 8A

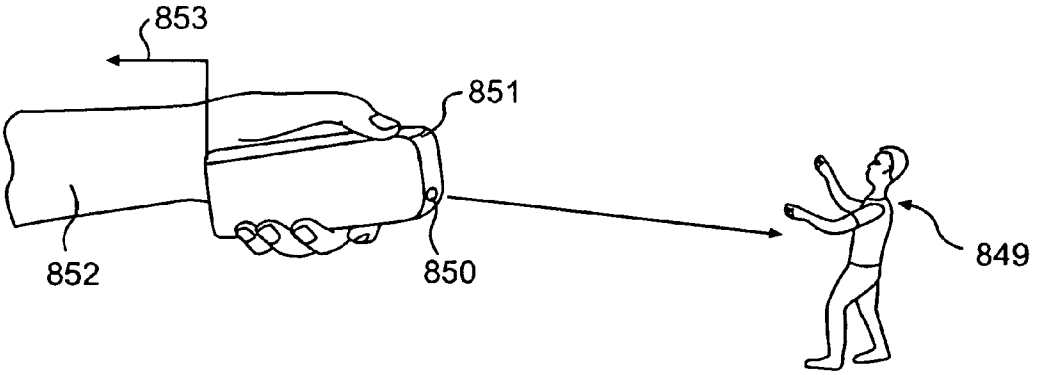
853
851
852
850
849

FIG. 8B

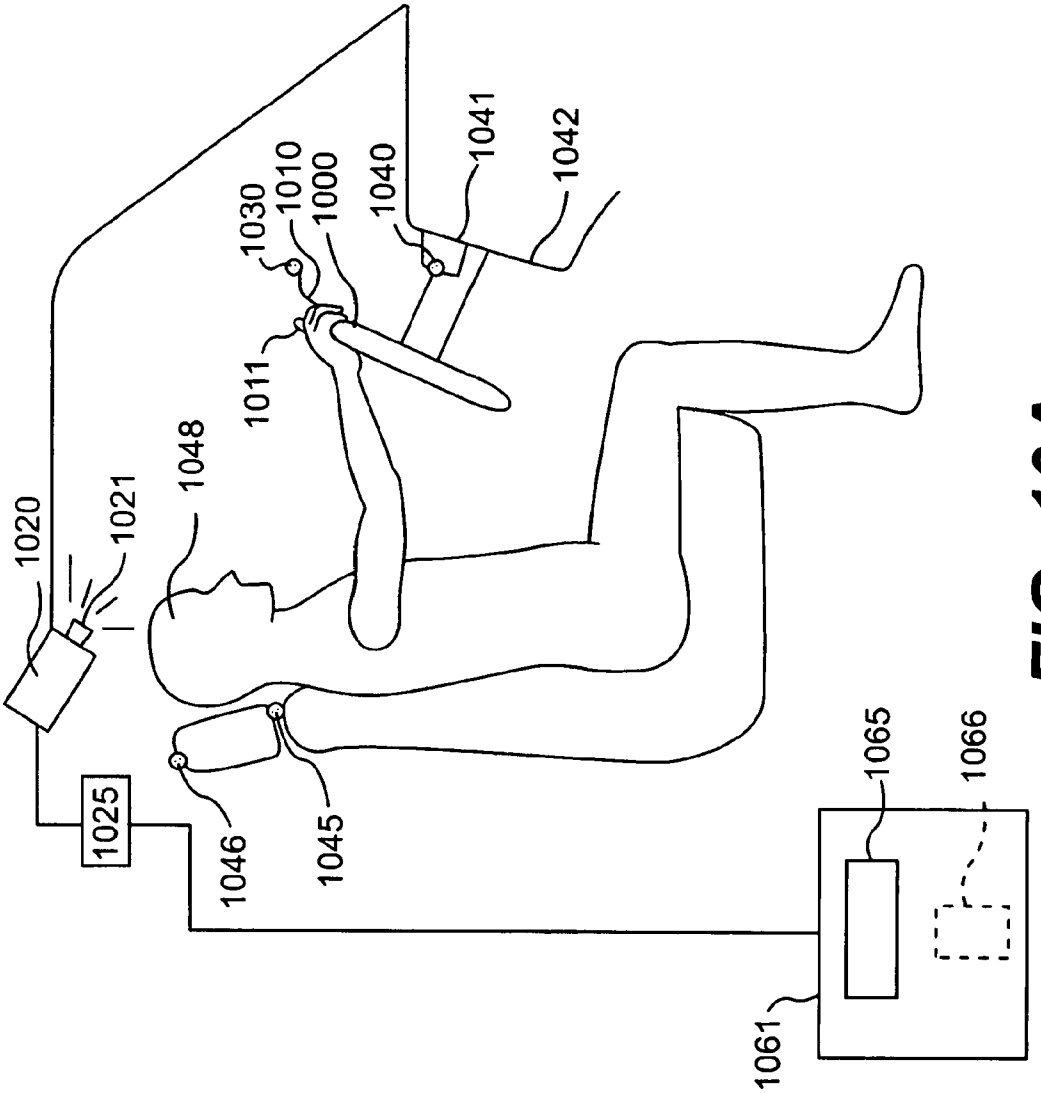
1020
1021
1048
1025
1046
1045
1030
1010
1000
1011
1040
1041
1042
1061
1065
1066

FIG. 10A

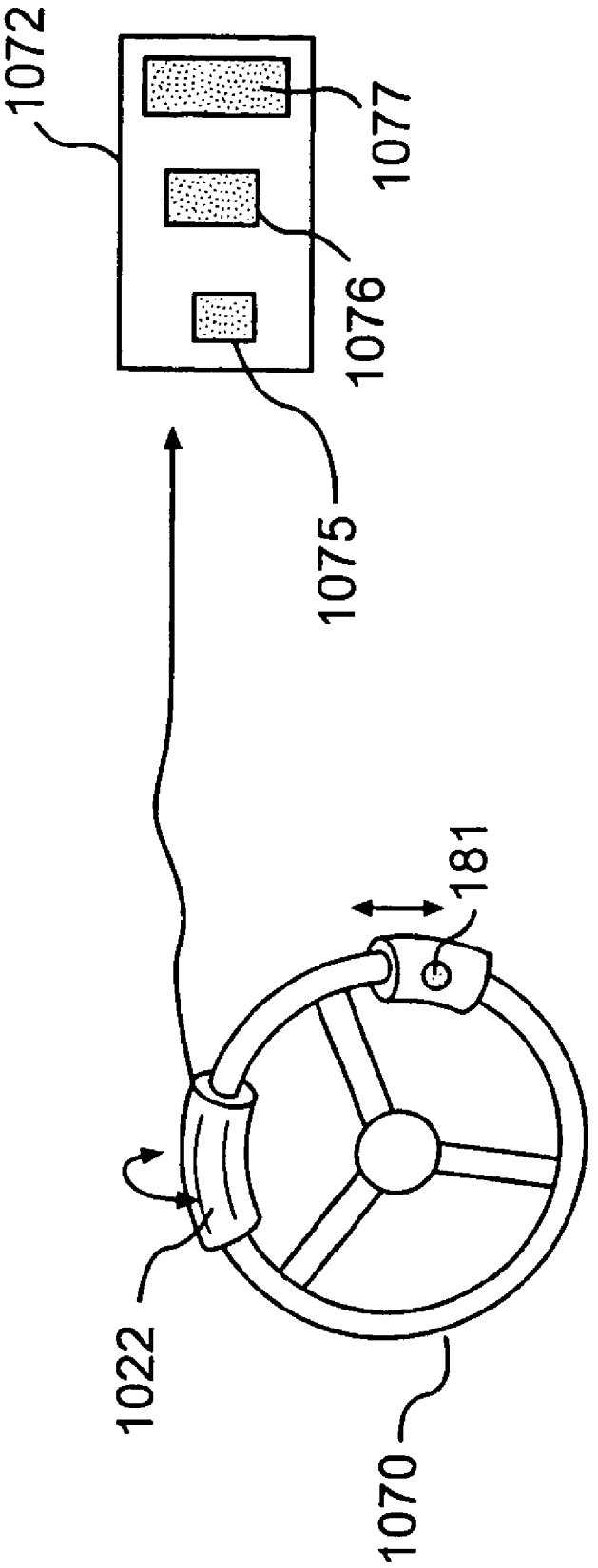

FIG. 10B

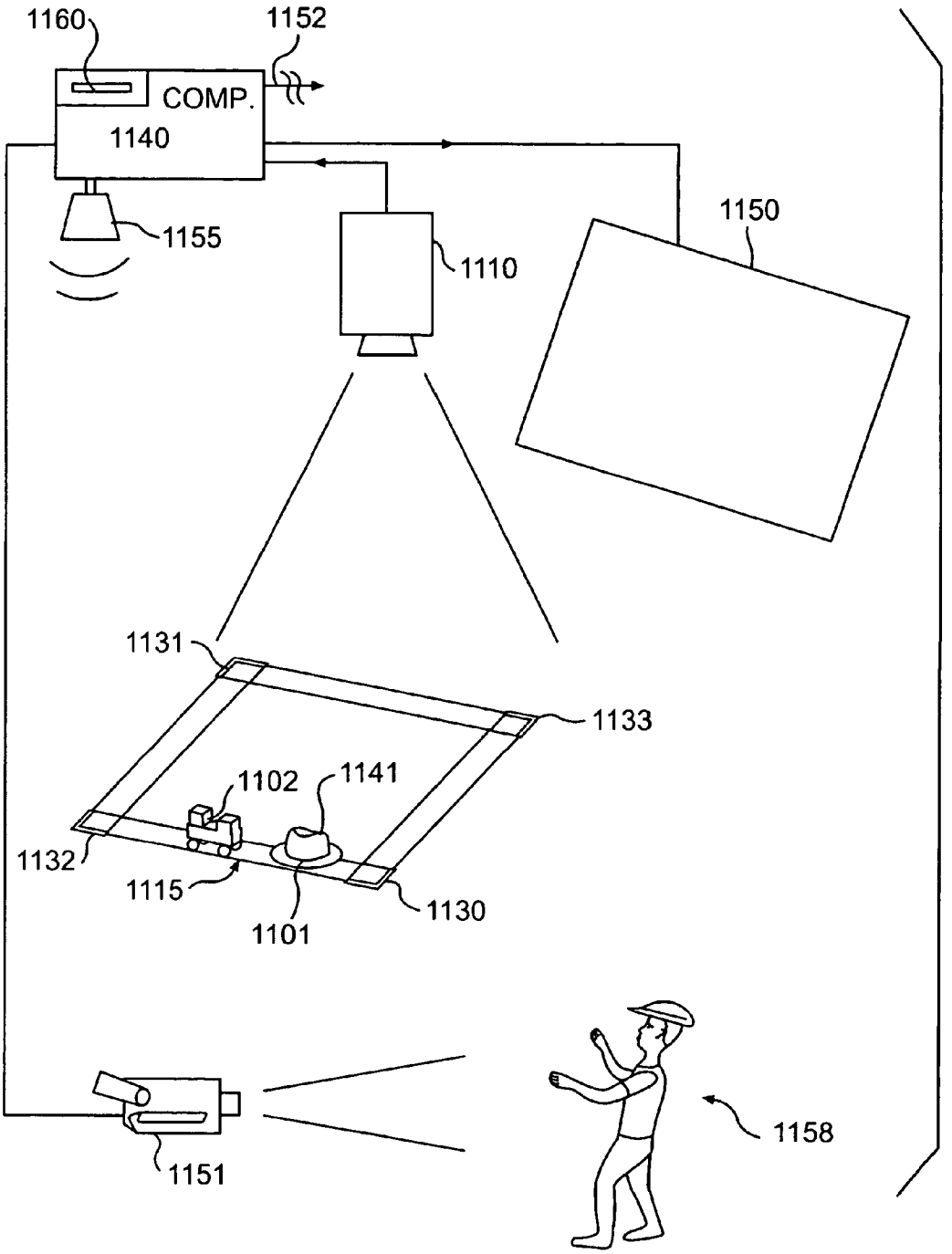
1160
1152
COMP.
1140
1155
1110
1150
1131
1133
1102
1141
1132
1115
1130
1101
1158
1151

FIG. 11A

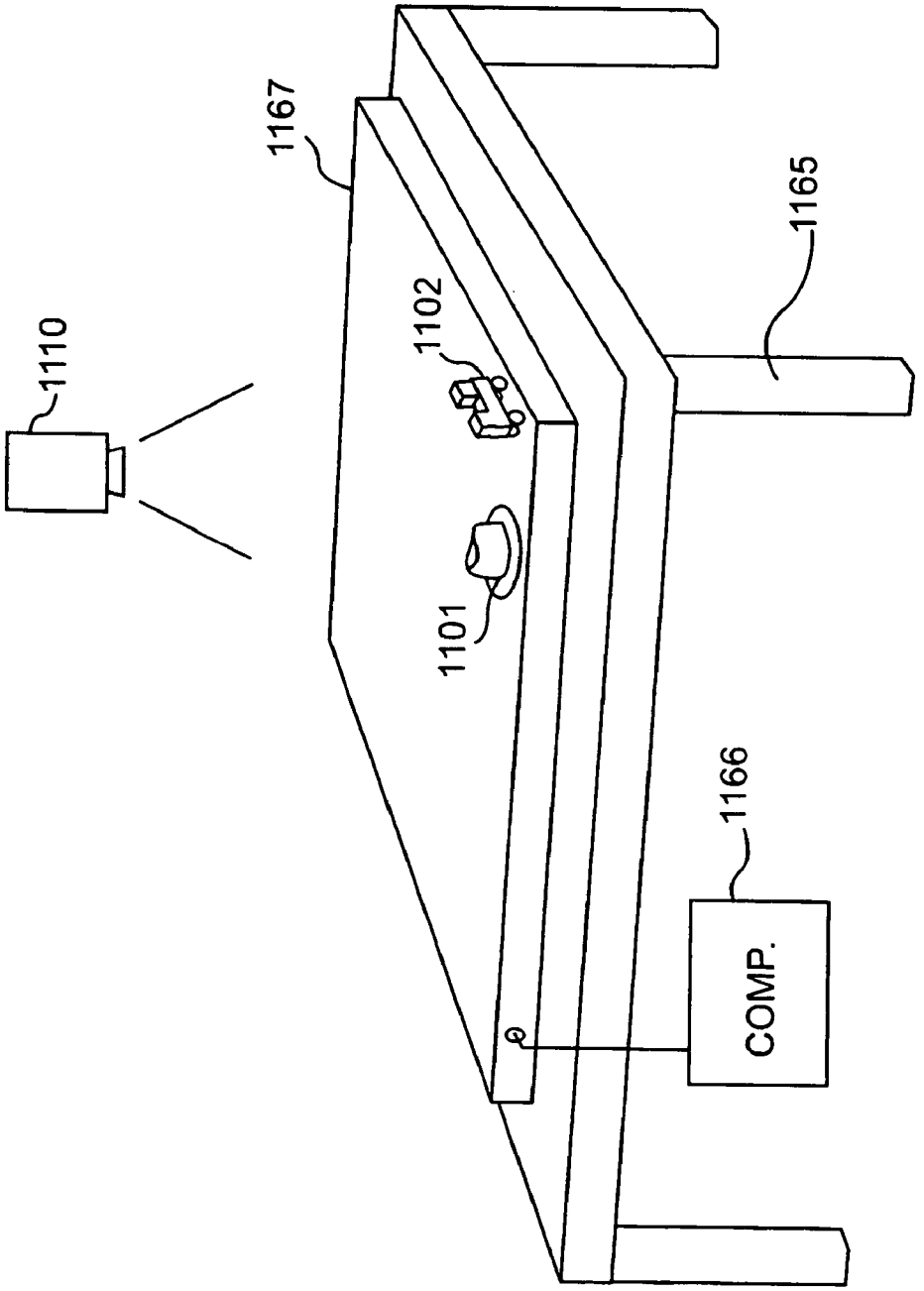

FIG. 11B

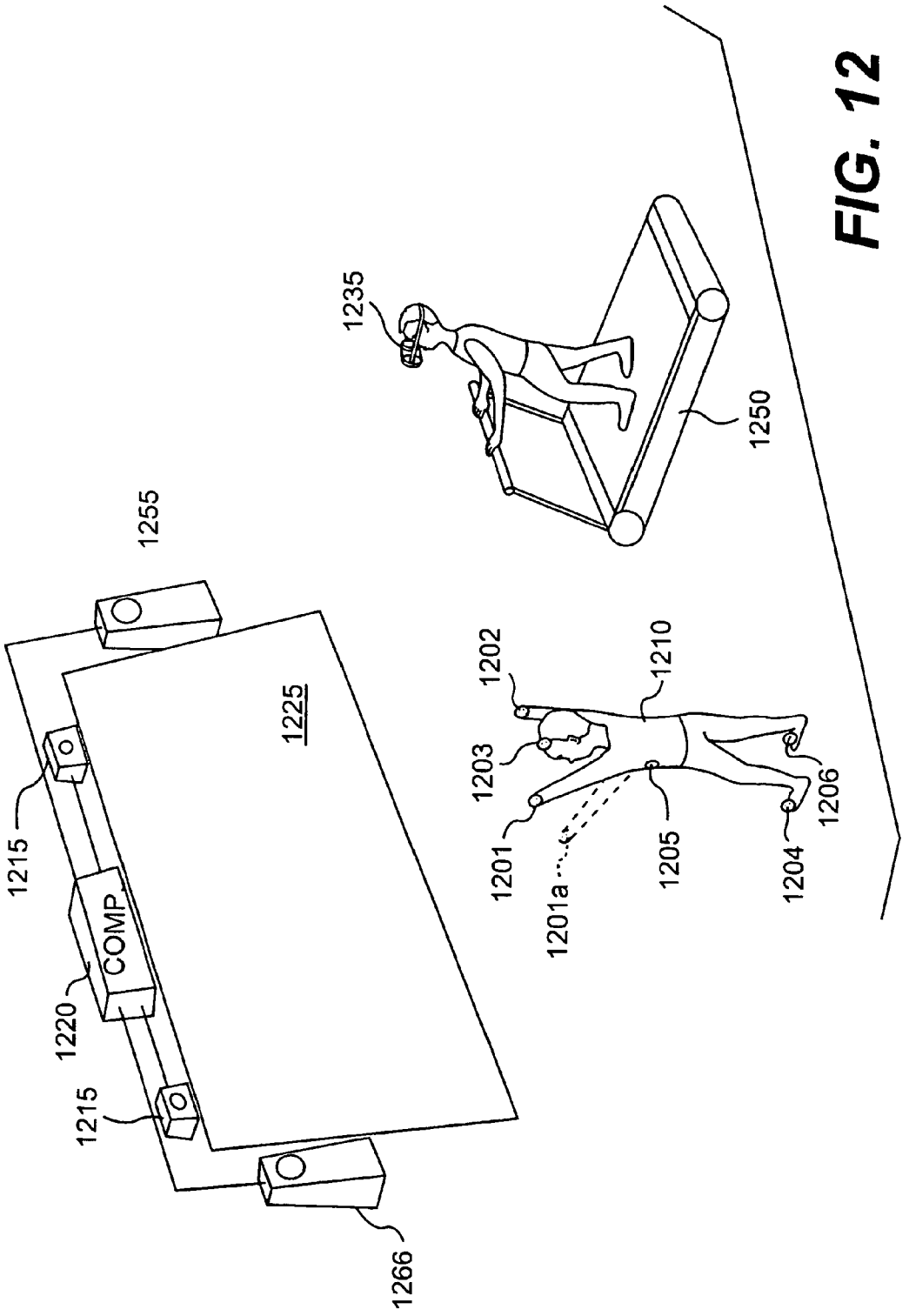
1235
1250
1255
1225
1215
COMP
1220
1215
1266
1202
1210
1203
1201
1201a
1205
1204
1206

FIG. 12

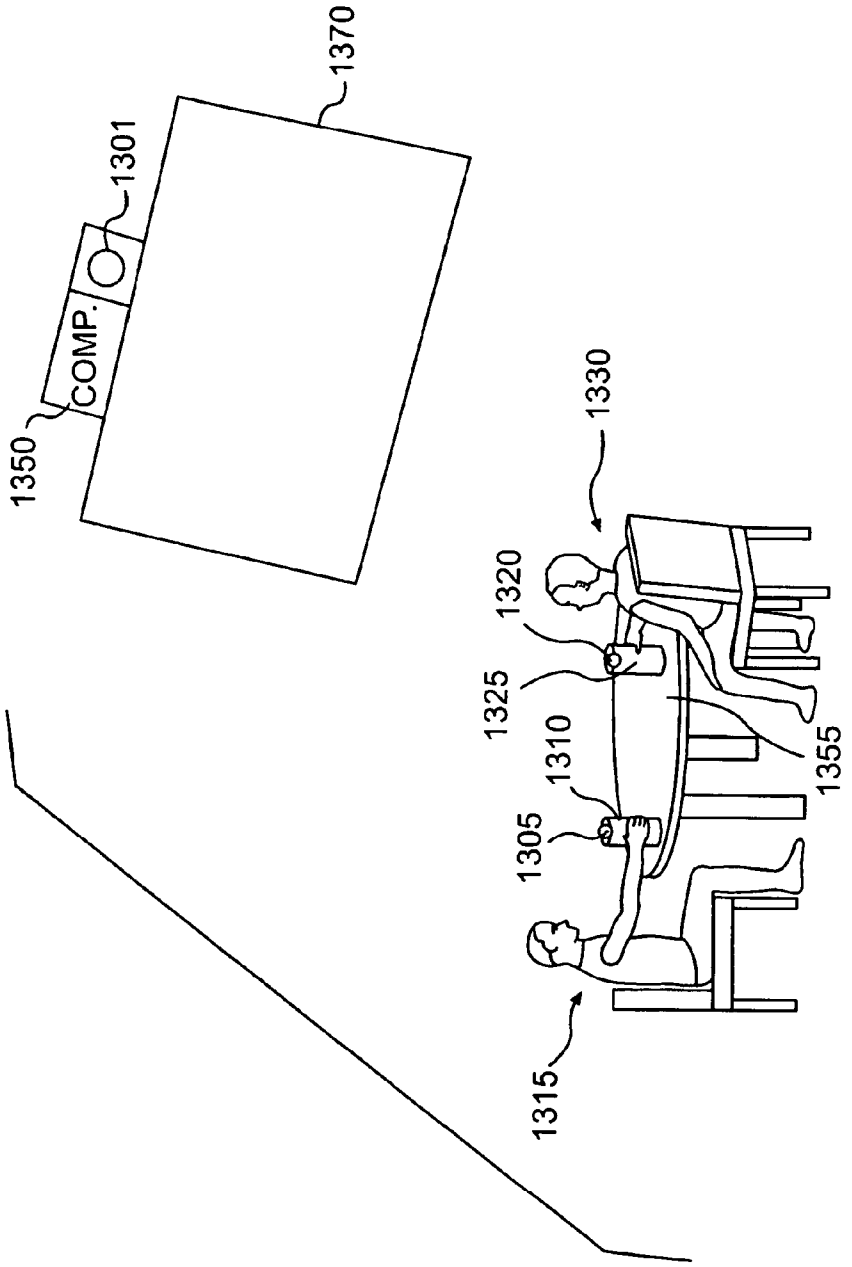

FIG. 13

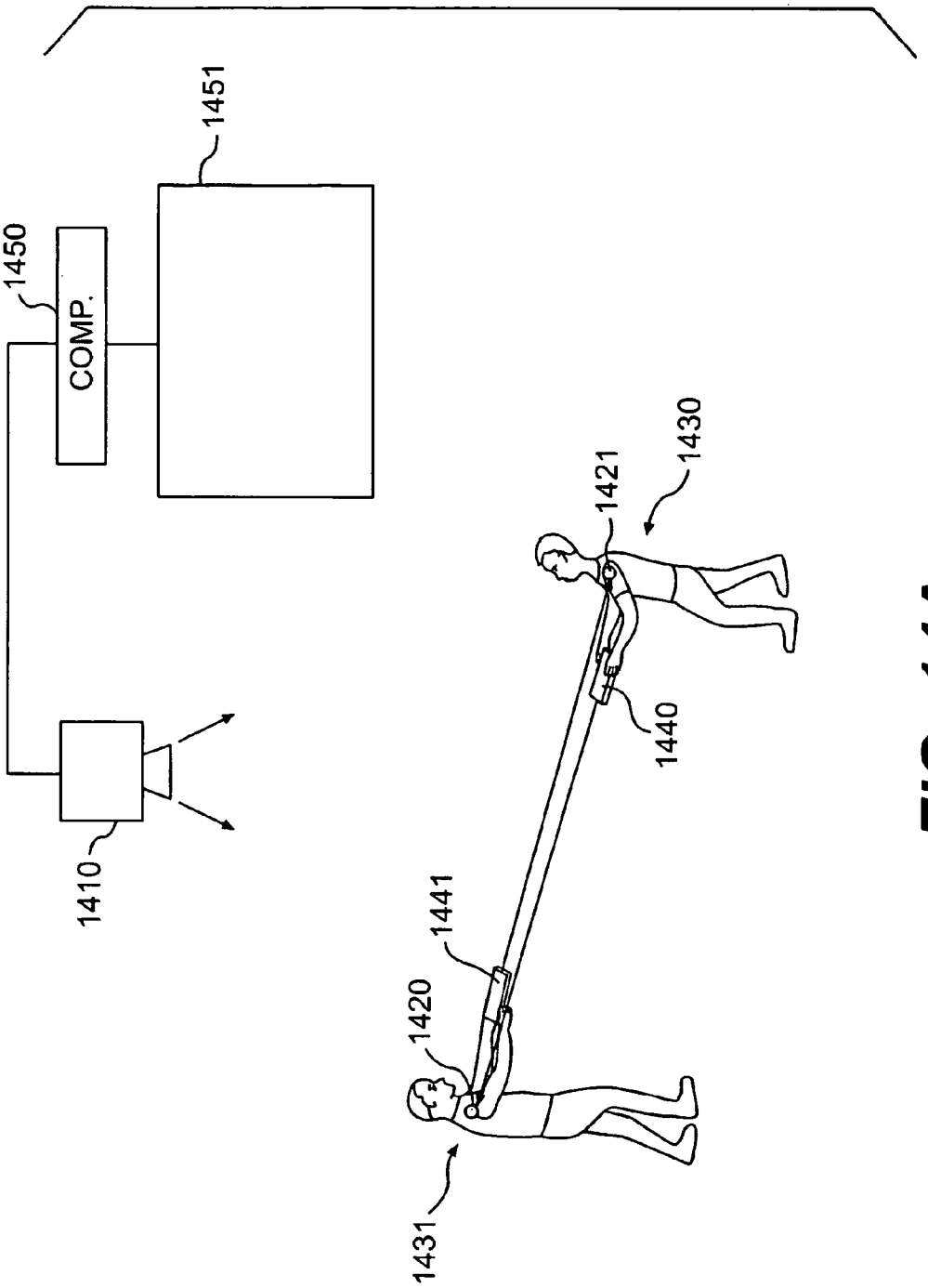

FIG. 14A

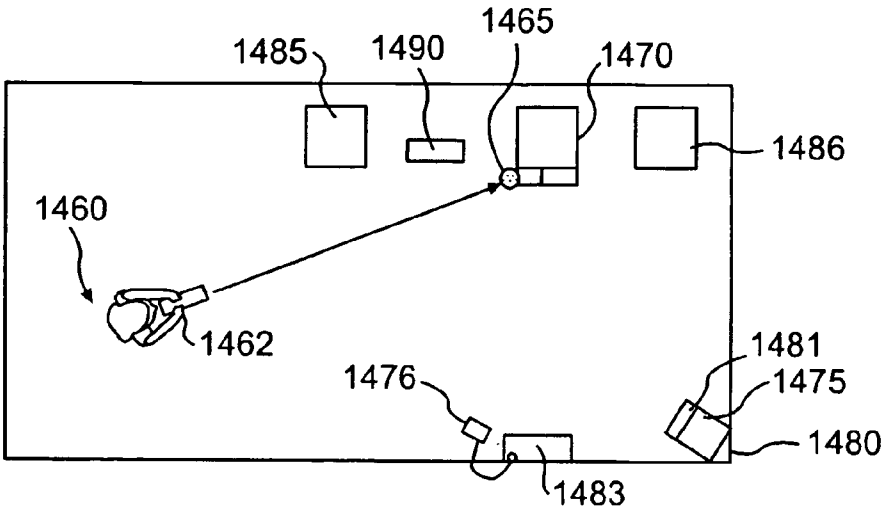

FIG. 14B

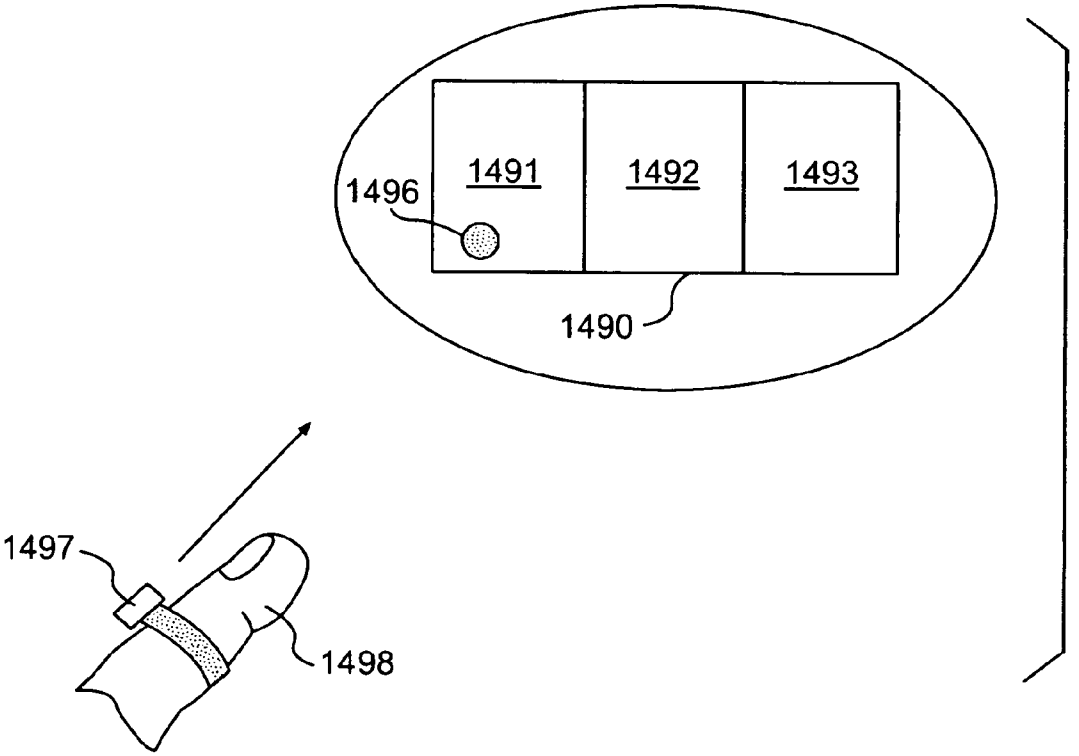

FIG. 14C

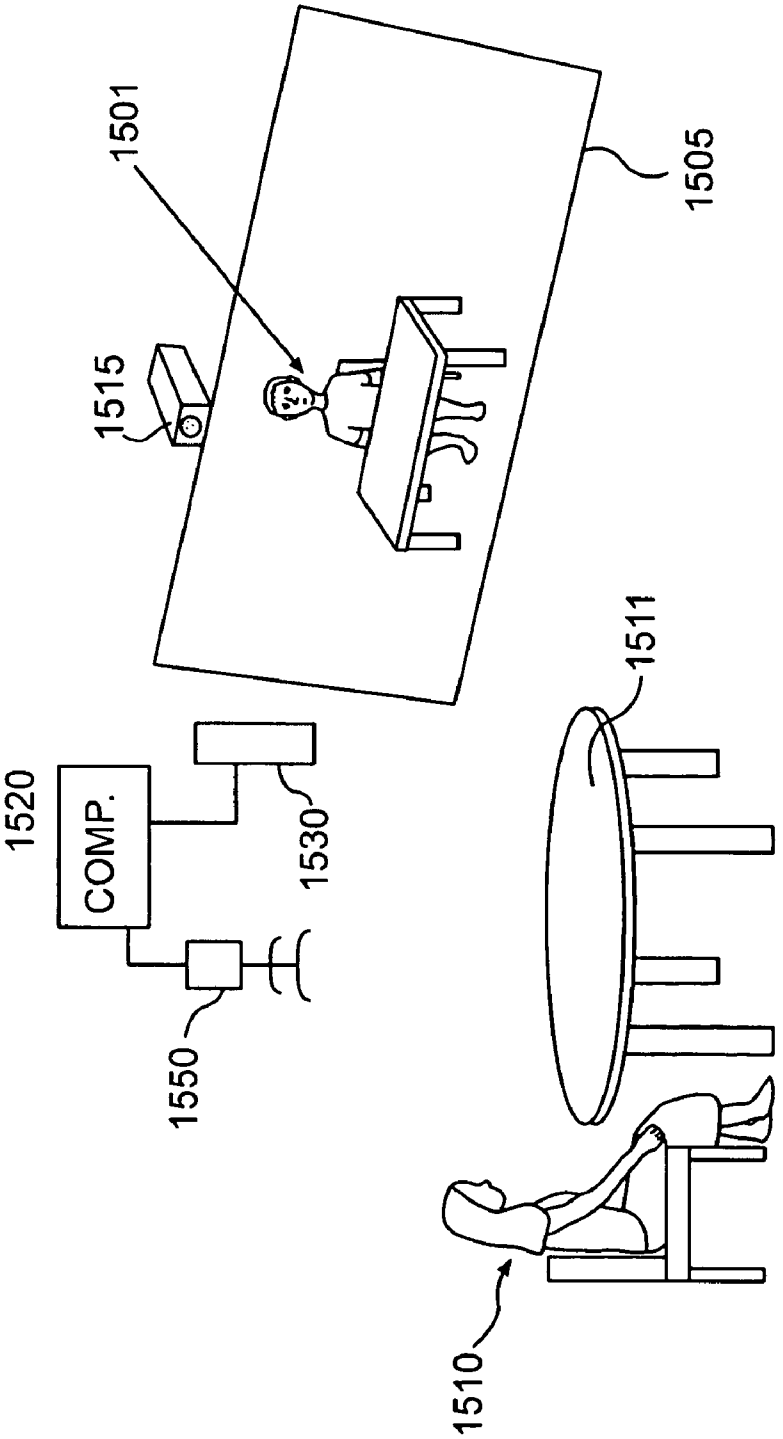

FIG. 15

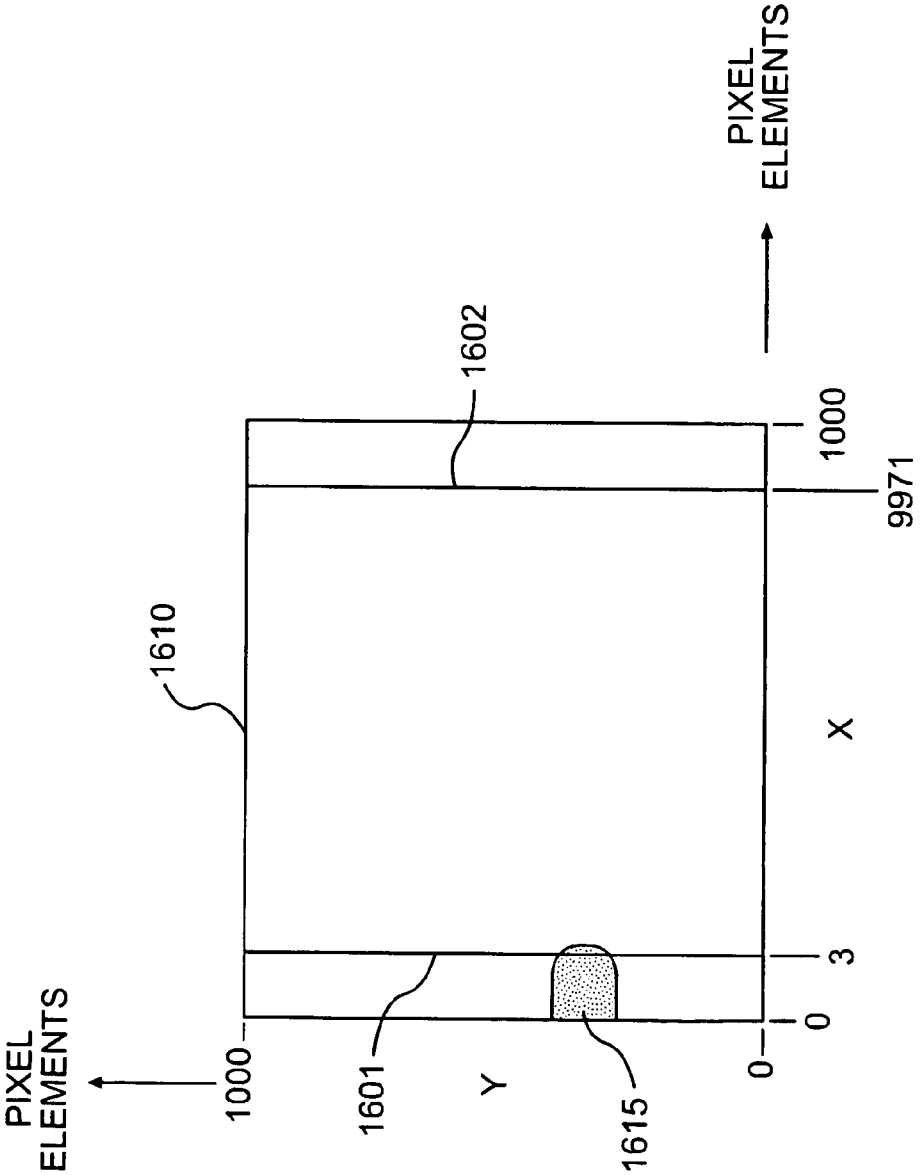
PIXEL ELEMENTS
1000
1601
Y
1615
0
1610
0
3
X
1602
1000
9971
PIXEL ELEMENTS

FIG. 16

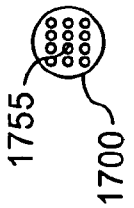

FIG. 17C

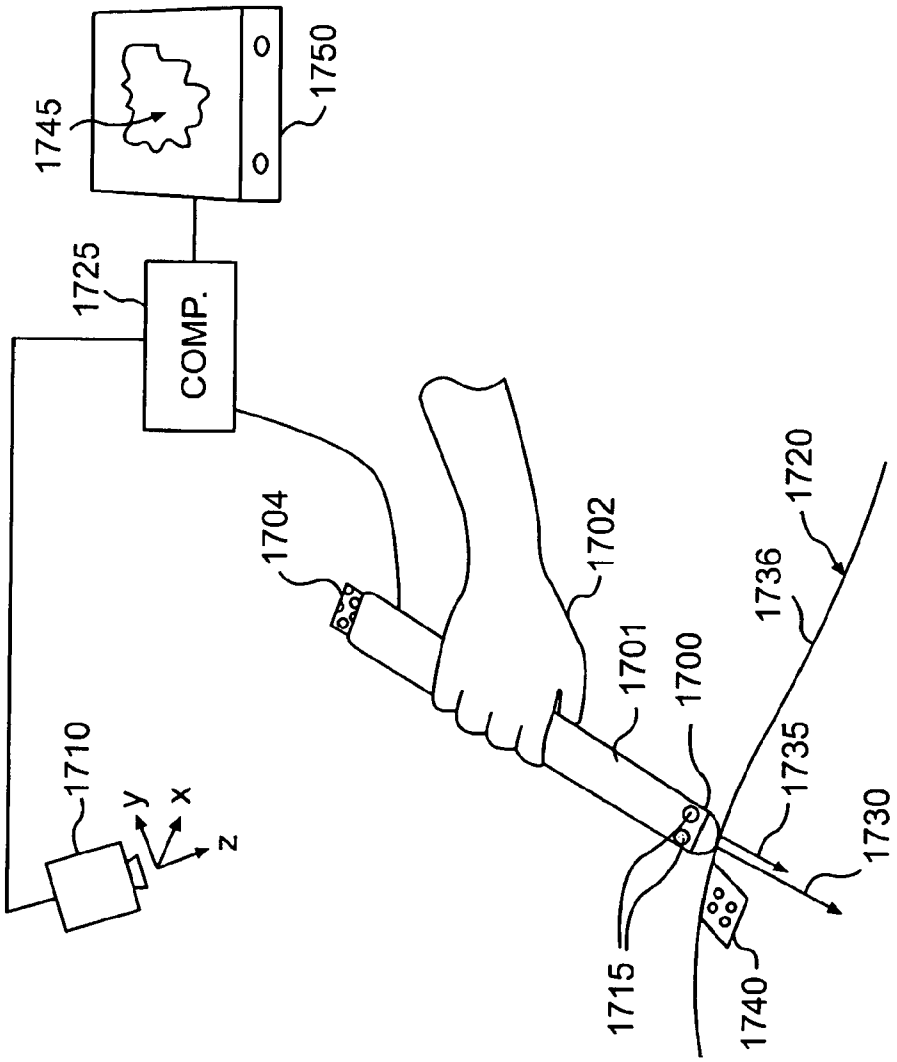

FIG. 17A

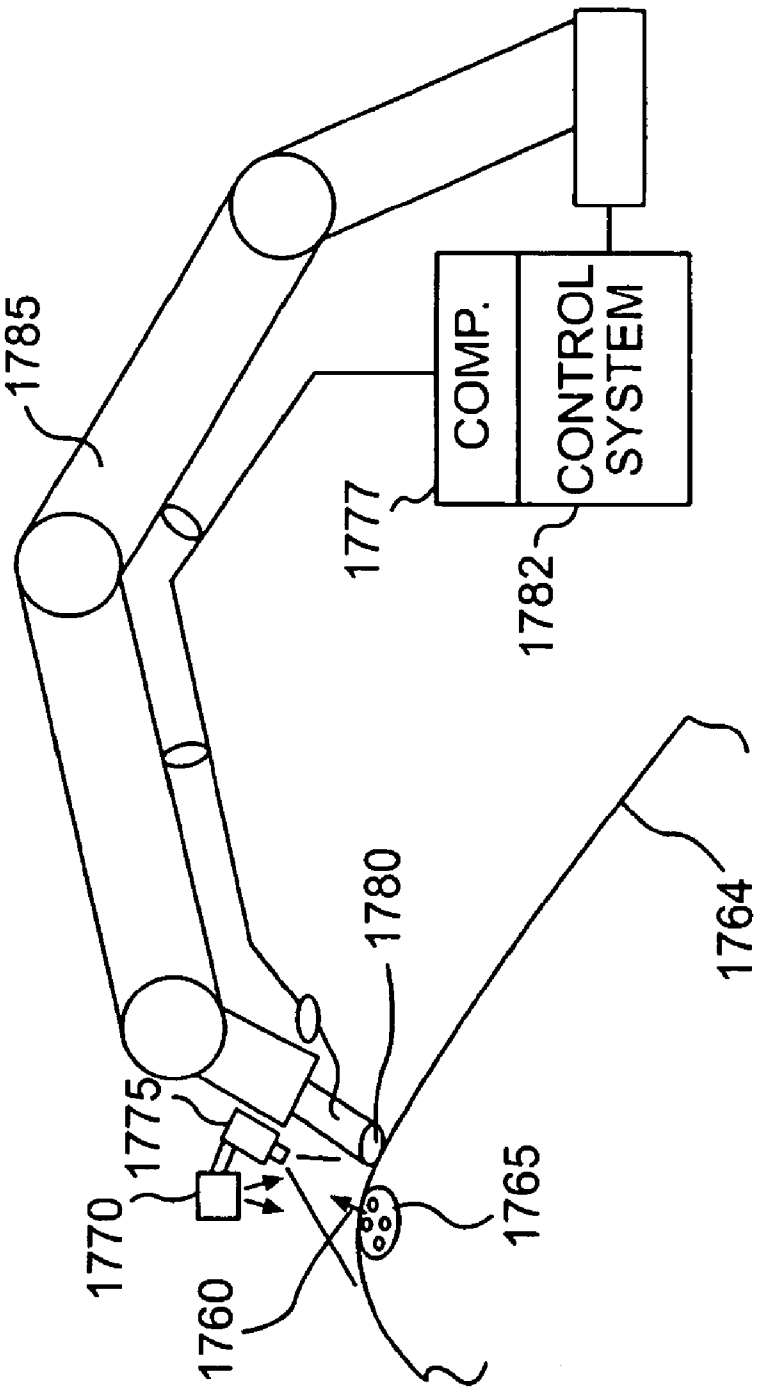
1785
COMP.
CONTROL SYSTEM
1777
1782
1780
1764
1775
1770
1765
1760

FIG. 17B

CAMERA BASED SENSING IN HANDHELD, MOBILE, GAMING, OR OTHER DEVICES

CROSS REFERENCE TO RELATED APPLICATIONS

This application is a continuation of application Ser. No. 11/980,710 filed Oct. 31, 2007, now U.S. Pat. No. 7,756,297; which is a continuation of application Ser. No. 10/893,534 filed Jul. 19, 2004, now U.S. Pat. No. 7,401,783; which is a continuation of application Ser. No. 09/612,225 filed Jul. 7, 2000, now U.S. Pat. No. 6,766,036; which claims the benefit of U.S. Provisional Application No. 60/142,777, filed Jul. 8, 1999.

Cross references to related co-pending US applications by the inventor having similar subject matter.

1. Touch TV and other Man Machine Interfaces: Ser. No. 09/435,854 filed Nov. 8, 1999, now U.S. Pat. No. 7,098, 891; which was a continuation of application Ser. No. 07/946,908, now U.S. Pat. No. 5,982,352;
2. More Useful Man Machine Interfaces and Applications: Ser. No. 09/433,297 filed Nov. 3, 1999, now U.S. Pat. No. 6,750,848;
3. Useful Man Machine interfaces and applications: Ser. No. 09/138,339, Pub. Appln. 2002-0036617, now abandoned;
4. Vision Target based assembly: Ser. No. 08/469,907 filed Jun. 6, 1995, now U.S. Pat. No. 6,301,783;
5. Picture Taking method and apparatus: provisional application 60/133,671, and regular application Ser. No. 09/568,552 filed May 11, 2000, now U.S. Pat. No. 7,015, 950;
6. Methods and Apparatus for Man Machine Interfaces and Related Activity: Provisional Application: provisional application 60/133,673 filed May 11, 1999; and regular application Ser. No. 09/568,554 filed May 11, 2000, now U.S. Pat. No. 6,545,670;
7. Tactile Touch Screens for Automobile Dashboards, Interiors and Other Applications: provisional application Ser. No. 60/183,807; and regular application Ser. No. 09/789,538, now U.S. Pat. No. 7,084,859; and
8. Apparel Manufacture and Distance Fashion Shopping in Both Present and Future: provisional application 60/187,397 filed Mar. 7, 2000.

The disclosures of the following U.S. patents and co-pending patent applications by the inventor, or the inventor and his colleagues, are incorporated herein by reference:

1. "Man machine Interfaces": U.S. application Ser. No. 09/435,854 and U.S. Pat. No. 5,982,352, and U.S. application Ser. No. 08/290,516, filed Aug. 15, 1994, now U.S. Pat. No. 6,008,000, the disclosure of both of which is contained in that of Ser. No. 09/435,854;
2. "Useful Man Machine Interfaces and Applications": U.S. application Ser. No. 09/138,339, now Pub. Appln. 2002-0036617;
3. "More Useful Man Machine Interfaces and Applications": U.S. application Ser. No. 09/433,297;
4. "Methods and Apparatus for Man Machine Interfaces and Related Activity": U.S. Appln. Ser. No. 60/133,673 filed as regular application Ser. No. 09/568,554, now U.S. Pat. No. 6,545,670;
5. "Tactile Touch Screens for Automobile Dashboards, Interiors and Other Applications": U.S. provisional Appln. Ser. No. 60/183,807, filed Feb. 22, 2000, now filed as reg. application Ser. No. 09/789,538; and
6. "Apparel Manufacture and Distance Fashion Shopping in Both Present and Future": U.S. Appln. Ser. No. 60/187,397, filed Mar. 7, 2000.

FIELD OF THE INVENTION

The invention relates to simple input devices for computers, particularly, but not necessarily, intended for use with 3-D graphically intensive activities, and operating by optically sensing a human input to a display screen or other object and/or the sensing of human positions or orientations. The invention herein is a continuation in part of several inventions of mine, listed above.

This continuation application seeks to provide further useful embodiments for improving the sensing of objects. Also disclosed are new applications in a variety of fields such as computing, gaming, medicine, and education. Further disclosed are improved systems for display and control purposes.

The invention uses single or multiple TV cameras whose output is analyzed and used as input to a computer, such as a home PC, to typically provide data concerning the location of parts of, or objects held by, a person or persons.

DESCRIPTION OF RELATED ART

The above mentioned co-pending applications incorporated by reference discuss many prior art references in various pertinent fields, which form a background for this invention. Some more specific U.S. Patent references are for example:

DeMenthon—U.S. Pat. Nos. 5,388,059; 5,297,061; 5,227, 985

Cipolla—U.S. Pat. No. 5,581,276

Pugh—U.S. Pat. No. 4,631,676

Pinckney—U.S. Pat. No. 4,219,847

DESCRIPTION OF FIGURES

FIG. **1** illustrates a basic computer terminal embodiment of the invention, similar to that disclosed in copending applications.

FIG. **2** illustrates object tracking embodiments of the invention employing a pixel addressable camera.

FIG. **3** illustrates tracking embodiments of the invention using intensity variation to identify and/or track object target datums.

FIG. **4** illustrates tracking embodiments of the invention using variation in color to identify and/or track object target datums.

FIG. **5** illustrates special camera designs for determining target position in addition to providing normal color images.

FIG. **6** identification and tracking with stereo pairs.

FIG. **7** illustrates use of an indicator or co-target.

FIG. **8** illustrates control of functions with the invention, using a handheld device which itself has functions.

FIG. **9** illustrates pointing at an object represented on a screen using a finger or laser pointer, and then manipulating the represented object using the invention.

FIG. **10** illustrates control of automobile or other functions with the invention, using detected knob, switch or slider positions.

FIG. **11** illustrates a board game embodiment of the invention.

FIG. **12** illustrates a generic game embodiment of the invention.

FIG. **13** illustrates a game embodiment of the invention, such as might be played in a bar.

FIG. **14** illustrates a laser pointer or other spot designator embodiment of the invention.

FIG. **15** illustrates a gesture based flirting game embodiment of the invention.

FIG. **16** illustrates a version of the pixel addressing camera technique wherein two lines on either side of a 1000 element square array are designated as perimeter fence lines to initiate tracking or other action.

FIG. **17** illustrates a 3-D acoustic imaging embodiment of the invention.

THE INVENTION EMBODIMENTS

FIG. **1**

The invention herein and disclosed in portions of other copending applications noted above, comprehends a combination of one or more TV cameras (or other suitable electro-optical sensors) and a computer to provide various position and orientation related functions of use. It also comprehends the combination of these functions with the basic task of generating, storing and/or transmitting a TV image of the scene acquired—either in two or three dimensions.

The embodiment depicted in FIG. **1**A illustrates the basic embodiments of many of my co-pending applications above. A stereo pair of cameras **100** and **101** located on each side of the upper surface of monitor **102** (for example a rear projection TV of 60 inch diagonal screen size) with display screen **103** facing the user, are connected to PC computer **106** (integrated in this case into the monitor housing), for example a 400 Mhz Pentium II. For appearances and protection a single extensive cover window may be used to cover both cameras and their associated light sources **110** and **111**, typically LEDs.

The LEDs in this application are typically used to illuminate targets associated with any of the fingers, hand, feet and head of the user, or objects such as **131** held by a user, **135** with hands **136** and **137**, and head **138**. These targets, such as circular target **140** and band target **141** on object **131** are desirably, but not necessarily, retro-reflective, and may be constituted by the object features themselves (e.g., a finger tip, such as **145**), or by features provided on clothing worn by the user (e.g., a shirt button **147** or polka dot **148**, or by artificial targets other than retroreflectors.

Alternatively, a three camera arrangement can be used, for example using additional camera **144**, to provide added sensitivity in certain angular and positional relationships. Still more cameras can be used to further improve matters, as desired. Alternatively, and or in addition, camera **144** can be used for other purposes, such as acquire images of objects such as persons, for transmission, storage or retrieval independent of the cameras used for datum and feature location determination.

For many applications, a single camera can suffice for measurement purposes as well, such as **160** shown in FIG. **1**B for example, used for simple 2 dimensional (2D) measurements in the xy plane perpendicular to the camera axis (z axis), or 3D (xyz, roll pitch yaw) where a target grouping, for example of three targets is used such as the natural features formed by the two eyes **164**, **165** and nose **166** of a human **167**. These features are roughly at known distances from each other, the data from which can be used to calculate the approximate position and orientation of the human face. Using for example the photogrammetric technique of Pinkney described below, the full 6 degree of freedom solution of the human face location and orientation can be achieved to an accuracy limited by the ability of the camera image processing software utilized to determine the centroids or other delineating geometric indicators of the position of the eyes and nose, (or some other facial feature such as the mouth), and the accuracy of the initial imputing of the spacing of the eyes and their respective spacing to the nose. Clearly if a standard human value is used (say for adult, or for a child or even by age) some lessening of precision results, since these spacings are used in the calculation of distance and orientation of the face of human **167** from the camera **160**.

In another generally more photogrammetrically accurate case, one might choose to use four special targets (e.g., glass bead retro-reflectors, or orange dots) **180-183** on the object **185** having known positional relationships relative to each other on the object surface, such as one inch centers. This is shown in FIG. **1**C, and may be used in conjunction with a pixel addressable camera such as described in FIG. **2** below, which allows one to rapidly determine the object position and orientation and track its movements in up to 6 degrees of freedom as disclosed by Pinkney U.S. Pat. No. 4,219,847 and technical papers referenced therein. For example, the system described above for FIGS. **1** and **2** involving the photogrammetric resolution of the relative position of three or more known target points as viewed by a camera is known and is described in a paper entitled "A Single Camera Method for the 6-Degree of Freedom Sprung Mass Response of Vehicles Redirected by Cable Barriers" presented by M. C. van Wijk and H. F. L. Pinkney to The Society of Photo-optical Instrumentation Engineers.

The stereo pair of cameras can also acquire a two view stereo image of the scene as well, which can be displayed in 3D using stereoscopic or auto-stereoscopic means, as well as transmitted or recorded as desired.

In many applications of the foregoing invention it is desirable not just to use a large screen but in fact one capable of displaying life size images. This particularly relates to human scaled images, giving a life-like presence to the data on the screen. In this way the natural response of the user with motions of hands, head, arms, etc., is scaled in "real" proportion to the data being presented.

FIG. **2**

This embodiment and others discloses special types of cameras useful with the invention. In the first case, that of FIG. **2**A, a pixel addressable camera such as the MAPP2200 made by IVP corporation of Sweden is used, which allows one to do many things useful for rapidly determining location of objects, their orientation and their motion.

For example, as shown in FIG. **2**A, an approximately circular image **201** of a target datum such as **180** on object **185** of FIG. **1**C may be acquired by scanning the pixel elements on a matrix array **205** on which the image is formed. Such an array in the future will have for example 1000×1000 pixels, or more (today the largest IVP makes is 512×512. The IVP also is not believed to be completely randomly addressable, which some future arrays will be).

As an illustration, computer **220** determines, after the array **205** has been interrogated, that the centroid "x, y" of the pixel elements on which the target image lies is at pixel x=500, y=300 (including a sub-fraction thereof in many cases). The centroid location can be determined for example by the moment method disclosed in the Pinkney patent, referenced above.

The target in this case is defined as a contrasting point on the object, and such contrast can be in color as well as, or instead of, intensity. Or with some added preprocessing, it can be a distinctive pattern on the object, such as a checkerboard or herringbone.

Subsequent Tracking

To subsequently track the movement of this target image, it is now only necessary to look in a small pixel window composed of a small number of pixels around the target. For example the square **230** shown, as the new position x'y' of the target image cannot be further distant within a short period of time elapsed from the first scan, and in consideration of the small required time to scan the window.

For example, if the window is 100×100 pixels, this can be scanned in 1 millisecond or less with such a pixel addressing camera, by interrogating only those pixels in the window, while still communicating with the camera over a relatively slow USB serial link of 12 mb transmission rate (representing 12,000 pixel gray level values in one millisecond).

One thus avoids the necessity to scan the whole field, once the starting target image position is identified. This can be known by an initial scan as mentioned, or can be known by having the user move an object with a target against a known location with respect to the camera such as a mechanical stop, and then indicate that tracking should start either by verbally saying so with voice recognition, or by actuating a control key such as **238** or whatever.

It is noted that if the tracking window is made large enough, then it can encompass a whole group of datums, such as **180-183** on an object.

FIG. **2**B Reduction in Acquisition Time

Another application of such a pixel addressing camera is shown in FIG. **2**B. One can look at the whole field, x y of the camera, **240**, but only address say every 10th pixel such as **250**, **251** and **252**, in each direction, i.e., for a total 10,000 pixels in a field of 1 million (1000×1000, say).

In this case computer **220** simply queries this fraction of the pixels in the image, knowing apriori that the target image such as **260** will have an image size larger than 10×10 pixels, and must be detectable, if of sufficient contrast, by one of the queried pixels. (For smaller or larger target images, the number and spacing of queried pixels can be adjusted accordingly). This for example, allows one to find approximate location of targets with only 1/100 the pixel interrogation time otherwise needed, for example, plus any gain obtained as disclosed above, by knowing in what region of the image to look (for example during tracking, or given some apriori knowledge of approximate location due to a particular aspect of the physical arrangement or the program in question).

Once a target has been approximately found as just described, the addressing can be optimized for that region of the image only, as disclosed in subsequent tracking section above.

Given the invention, the potential for target acquisition in a millisecond or two thus is achievable with simple pixel addressable CMOS cameras coming on stream now (today costing under $50), assuming the target points are easily identifiable from at least one of brightness (over a value), contrast (with respect to surroundings), color, color contrast, and more difficult, shape or pattern (e.g., a plaid, or herringbone portion of a shirt). This has major ramifications for the robustness of control systems built on such camera based acquisition, be they for controlling displays, or machines or whatever.

It's noted that with new 2000×2000 cameras coming on stream, it may only be necessary to look at every 15th or 20th pixel in each direction to get an adequate feel for target location. This means every 200th to 400th pixel, not enough to cause image rendition difficulties even if totally dark grey (as it might be in a normal white light image if set up for IR wavelengths only).

FIG. **2**C

Another method for finding the target in the first place with limited pixel interrogation is to look at pixels near a home point where a person for example indicates that the target is. This could be for example, placing ones fingernail such as **270**, whose natural or artificial (e.g., reflective nail polish) features are readily seen by the camera **275** and determined to be in the right corner of a pad **271** in FIG. **2**C which approximately covers the field of view **274** of the camera **275**. The computer **220** analyzes the pixels in the right corner **278** of the image field **279** representing the pad portion **271** with the camera **275**, either continuously, or only when the finger for example hits a switch such as **280** at the edge of the pad, or on command (e.g., by the user pushing a button or key, or a voice message inputted via microphone **285** for example). After such acquisition, the target is then tracked to other locations in xy space of the pad, for example as described above. Its noted that it helps to provide a beep or other sound or indication when acquisition has been made.

Pick Windows in Real Time

Another aspect of the invention is that one can also pick the area of the image to interrogate at any desired moment. This can be done by creating a window of pixels with in the field to generate information, for example as discussed relative to a specific car dashboard application of FIG. **10**.

FIG. **2**D—Scan Pattern

A pixel addressing camera also allows a computer such as **220** to cause scans to be generated which are not typical raster scans. For example circular or radial, or even odd shapes as desired. This can be done by providing from the computer the sequential addresses of the successive pixels on the camera chip whose detected voltages are to be queried.

A circular scan of pixels addressed at high speed can be used to identify when and where a target enters a field enclosed by the circular pixel scan. This is highly useful, and after that, the approximate location of the target can be determined by further scans of pixels in the target region.

For example consider addressing the pixels **c1 c2 c3** . . . cn representing a circle **282** at the outer perimeter of the array, **285**, of 1000×1000 elements such as discussed above. The number of pixels in a full circle is approximately 1000 pi, which can be scanned even with USB (universal serial bus) limits at 300 times per second or better. For targets of 1/100 field in width, this means that a target image entering the field such as circular target image **289** (which is shown intersecting element cm and its neighbors) would have to travel 1/100 the field width in 0.0033 seconds to be totally missed in a worst case. If the image field corresponds to 20 inches in object field width this is 0.2 inches×300/sec or 60 inches/second, very fast for human movement, and not likely to be exceeded even where smaller targets are used.

Alternative shapes to circular "trip wire" perimeters may be used, such as squares, zig-zag, or other layouts of pixels to determine target presence. Once determined, a group of pixels such as group **292** can be interrogated to get a better determination of target location.

FIG. **3**

Since many applications of the invention concern, or at least have present a human caused motion, or motion of a part of a human, or an object moved by a human, the identification and tracking problem can be simplified if the features of interest, either natural or artificial of the object provide some kind of change in appearance during such motion.

FIG. **3** illustrates tracking embodiments of the invention using intensity variation to identify and/or track object target datums. In a simple case, a subtraction of successive images can aid in identifying zones in an image having movement of

features as is well known. It is also useful to add pixel intensities of successive images in computer **220** for example. This is particular true with bright targets (with respect to their usual surroundings) such as LEDs or retro-reflectors. If the pixels in use by the camera are able to gather light preferentially at the same time a special illumination light is on, this will accentuate the target with respect to background. And if successive frames are taken in this way, not only will a stationary image of the special target build up, but if movement takes place the target image then will blur in a particular direction which itself can become identify-able. And the blur direction indicates direction of motion as well, at least in the 2-D plane of the pixel array used.

Another form of movement can take place artificially, where the target is purposely moved to provide an indication of its presence. This movement can be done by a human easily by just dithering ones finger for example (if a portion of the finger such as the tip is the target in question), or by vibrating an object having target features of interest on it, for example by moving the object up and down with ones hand.

For example consider FIG. **3**A, where a human **301** moves his finger **302** in a rapid up and down motion, creating different image positions sequentially in time of bright target ring **320**, **320'** on his finger, as seen by camera **325**. If the camera can read quickly enough each of these positions such as **326** and **327** in image field **328** can be resolved, other wise a blur image such as **330** is registered on the camera and recorded in the computer **335**.

Instead of using ones finger, it is also possible to create movement of a target for example with a tuning fork or other mechanism mechanically energizing the target movement, on what otherwise might be a static object say. And it is possible for the human, or a computer controlling the movement in question to create it in such a manner that it aids identification. For example, a certain number of moves of ones finger (e.g., 4), or 2 moves/sec of ones finger, or horizontal moves of ones finger etc., any or all of these could indicate to the computer upon analysis of the camera image, that a target was present.

The invention comprehends this as a method for acquiring the datum to be tracked in the first place, and has provided a camera mechanism for tracking fast enough not to lose the data, assuming a sufficiently distinct feature. For example, it is desirable to not require sophisticated image processing routines and the like if possible, to avoid the time it takes to execute same with affordable equipment. And yet in many scenes, finding a target cant be done easily today without some aid, either a high contrast target (contrasting brightness or color or both, for example). Or the aid can be movement as noted, which allows the search for the target to be at least localized to a small region of the field of view, and thence take much less time to run, even if a sophisticated algorithm is employed.

FIG. **3**B illustrates an embodiment wherein a target which blinks optically is used. The simplest case is a modulated LED target such **340** on object **341** shown. Successive frames taken with camera **345** looking at pixel window **346** at **300** scans of the pixels within the window per second where the image **347** of the LED target is located, can determine, using computer **349** (which may be separate from, or incorporated with the image sensor), 5 complete blinks of target **340**, if blinked at a 60 hz rate. Both blink frequency, blink spacing, blink pulse length can all be determined if the scan rate is sufficiently faster than the blink rate, or pulse time.

It should be noted that if the target **340** is a retro-reflector as in FIG. **1**, with an illumination source such as **355** near the axis of the camera, then the LEDs (or other sources) of the illuminator can be modulated, causing the same effect on the target.

Somewhat more sophisticated is the situation shown in FIG. **3**C where a target **380** (on object **360**) illuminated by a light source **365** provides a time variant intensity change in the camera image **368** obtained by camera **370** as the target moves its position and that of the image. This can be achieved naturally by certain patterns of material such as herringbone, or by multifaceted reflectors such as cut diamonds (genuine or glass), which "twinkle" as the object moves. A relative high frequency "twinkle" in the image indicates then the presence of the target in that area of the image in which it is found.

When analog sensors such as PSD (position sensing diode) sensor **369** described in a copending application is used in addition to, or instead of a matrix array in camera **370**, the variation in light intensity or twinkle can be obtained directly from the detected output voltage from the signal conditioning of the sensor as shown in trace **375** corresponding to the movement of diamond target **380** a distance in the camera field. From the PSD one can also determine the position of the detected target image, theoretically at least independent of the intensity fluctuation.

For digital array detectors, the intensity variation can also be detected by subtracting images and observing the difference due to such variation. Such images need to be taken frequently if the twinkle frequency is high, and this can cause problems unless high speed camera scanning is possible. For example, in a twinkle mode, a pixel addressable camera using the invention herein could scan every 5th pixel in both x and y. This would allow a 1000 frame per second operation of a camera which would normally go 40 frames per second. Such a rate should be able to capture most twinkle effects with the assumption that the light field changes on more than 25 pixels. If less, then scan density would need to be increased to every 3rd pixel say, with a corresponding reduction in twinkle frequency detection obtainable.

FIG. **4**

FIG. **4**A illustrates identification and tracking embodiments of the invention using color and color change in a manner similar in some aspects to the intensity variation from object datums described above.

Color can be used as has been noted previously to identify a target, as can a change in color with time. For example, a target can change its color in order to identify itself to successive interrogations of pixels on a color TV camera. This can be accomplished by having a retro-reflector which is illuminated in succession by light from different colored LEDs for example, in the arrangement of FIG. **1**. For example red led **401** illuminates retro reflector target **405** on object **406** during frame **1** (or partial frame, if not all pixels addressed) taken by camera **410**. Then yellow led **402** illuminates target **405** on the next frame, and so forth. For any reading of successive frames, one point in the image will appear to distinctly change color, while all other points will be more or less the same due to the room lighting overwhelming the led source illumination and the natural color rendition of the objects themselves.

To return color variation when moved, one can employ a target which changes color naturally as it moves, even with illumination of constant color. Such a target can contain a diffractive, refractive, or interference based element, for example, a reflective diffraction grating for example, which splits white light illumination into colors, which are seen differently as the target moves and changes angle with respect to the observer and/or illumination source.

For example, consider FIG. **4**B showing reflective grating **440** on object **445** at initial position P. When illuminated by white light for example from lamp **450**, it reflects the spectrum such that when the object has moved to a new position P' the color (or colors, depending on the grating type, and angles involved) returning to camera **460** is changed. Such gratings can be purchased from Edmund Scientific company, and are typically made as replicas of ruled or holographic gratings.

Some types of natural features which change color are forms of jewelry which have different colored facets pointing in different directions. Also some clothes look different under illumination from different angles. This could be called then "color twinkle".

FIG. **5**

FIG. **5** illustrates special camera designs for determining target position in addition to providing normal color images. As was pointed out in a co-pending application, it may be desirable to have two cameras looking at an object or area one for producing images of a person or scene, the other for feature location and tracking. These may be bore-sighted together using beam splitters or the like to look at the same field, or they may just have largely overlapping image fields. The reason this is desirable is to allow one to obtain images of activity in the field of view (e.g., a human playing a game) while at the same time ideally determine information concerning position or other aspects of features on the human or objects associated with him.

It is now of interest to consider a matrix array chip equipped with a special color filter on its face which passes a special wavelength in certain pixel regions, in addition to providing normal color rendition via RGB or other filtering techniques in the remaining regions. The chip could be pixel addressable, but does not have to be.

Version FIG. **5**A

One version would have one special pixel filter such as **505**, for each square group of 4 pixels in an array **500** (one special pixel filter **505**, and 3 pixels, **510-512** filtered for RGB (red green blue) or similar, as is commonly used now for example. In one functional example, the special pixel **505** is purposely not read during creation of the normal image of a scene, but rather read only on alternate frames (or as desired) to determine target locations. If the array can be addressed pixel wise, the actual time lost doing this can be low. Since 25% of the pixels are effectively dead in forming the image in this example, and assuming all pixels are of equal area (not necessarily required), then 25% of the image needs to be filled in. This can be done advantageously in the image displayed, by making the color and intensity of this pixel the same as the resultant color and average intensity value of the other 3 in the cluster.

Version FIG. **5**B

In this version, related to FIG. **2** above, and shown in FIG. **5***b,* isolated pixels such as **530** (exaggerated in size for clarity) on array **531** or clusters of pixels such as **540-543**, are used to rapidly find a target with low resolution, such as round dot target image **550**. These pixels can ideally have special filters on their face, for example having near IR bandpass filters (of a wavelength which can still be seen by the camera, typically up to 1 um wavelength max). If takes only a few pixels to see the rough presence of a target, then in an image field of 1000×1000 pixels there could be one or more target images occupying 10×10 pixels or more. Thus in any group of 10×10, you could have 5 near IR filtered receptive pixels say, i.e., only 5% of the total pixel count but sufficient to see the IR targets location to a modest accuracy. Once found, one can also use the "normal" pixels on which the target image also falls to aid in more precise determination of its location, for example using pixel group **555** composed of numerous pixels.

In short by having a camera with certain pixels responsive to selected wavelengths and/or scanned separately one can very rapidly scan for target features, then when found, take a regular picture if desired. Or just take regular pictures, until the necessity arises to determine target location.

Similarly the special filtered pixels such as **505** or **530** could be laser wavelength bandpass filtered for this purpose, used by the array for preferentially detecting laser light projected on an object (while ignoring other wavelengths). In a normal image, such a pixel would be nearly black as little white light passes (except that centered on the laser wavelength). To provide a normal picture using such a camera, the special IR or laser wavelengths pixels readings would be filed in with values and colors of light from the surrounding regions.

Such a laser wavelength filter can be extremely effective, even if a relatively weak laser is used to illuminate a large area, especially where retro-reflectors are used, and the light returned is concentrated by 1000 times or more.

FIG. **6**

The embodiments above have dealt with finding just one target, and generally with just one camera, even though two or more cameras may be used for stereo imaging. Where stereo pairs of cameras are used, clearly each camera must see the target, if range via image disparity (the shift in location of a feature in the image in two camera views separated by a baseline) is to be determined.

Using the invention, one camera can be considered a master, the other a slave. The master camera determines target location by any of the means described above. Then the slave need only look at the expected pixel location of the target assuming some a priori knowledge of range which can come from previous target readings, or known range zones where the target has to lie in a given application.

Consider cameras **600** (master) with lens **603** and **601** (slave) having lens **604**, the axes of the two cameras separated by baseline **602** and with interfaced to computer **605**. The image of target **610** on object **615** is formed at position **620** on array **630** of camera **600**, and at position **621** on array **631** of camera **601**. The difference in position x in the direction of the baseline, in this simple situation is directly proportional to range z. The knowledge then of target image position **620** found by interrogating some or all of the pixels of camera **600** can as mentioned be used to more rapidly find image **621** in the image field of the "slave" camera **601**, and thus the z location of the target **610**.

For example if range is known to be an approximate value of z, one can look in the image field of the camera **601** along a line of points at a calculated value x away from the edge of the field, assuming **620** has been found to lie as shown near the corresponding edge of the field of camera **600**.

Two or more cameras may be used for stereo image analysis including object range and orientation data as discussed in FIGS. **1** and **6**. Range can also be determined via triangulation with a single camera and one target if projected on to the object in question at an angle to the camera axis from a laser say, or by using a single camera and 3 or more points on an object whose relative relationship is known (including the case of a line of points and an external point).

FIG. **7**

As stated above, the TV camera of the invention can be used to see either natural or artificial features of objects. The former are just the object features, not those provided on the object especially for the purpose of enhancing the ability to

determine the object location or other variable using computer analysis of TV camera images. Such natural features, as has been pointed out in many of the co-pending referenced applications, can be holes, corners, edges, indentations, protrusions, and the like of fingers, heads, objects held in the hand, or whatever.

But using simple inexpensive equipment it is often hard to determine the presence or location of such features in a rapid reliable enough manner to insure function of the application in question. In this case, one can employ one or more artificial features, provided on the object by attaching a artificial target onto the object, or manufacturing the object with such a target.

At least three types of artificial features can be employed.

1. The first is to provide special features required for object location, or orientation determination. Such a special feature can be of an optically contrasting material at the wavelength used to that of the object, for example a bright color, or a retroreflector;
2. The second is to provide one artificial feature (typically capable of more easily being found in an image than natural features of the object), and by finding it, localize to the region of that target environs the problem of finding any other features needed nearby; and
3. The third is to find an artificial feature on an object that actually by its shape, location, or coded features, provides a guide to the location of natural or other artificial features which are to be sensed in order to determine position or orientation of the same or related objects. This has been dubbed by me a co-target in co-pending applications incorporated by reference.

As shown in FIG. **7**, object **700** has co-target **701** at one end, visible to camera **705**. The co-target in this particular instance is a diamond shape, and is of high contrast for easy acquisition. For example it could be a yellow plastic retroreflector formed of molded corner cubes similar to those used on cars for taillights and other safety purposes.

The diamond shape in this case is significant for two reasons. First it is unusual relative to the object or background when used in the context intended, and makes the target still more identifiable (that is novel color, shape and brightness are all present). In addition, in this particular instance it has been chosen that a diamond shape, should indicate that the corners of the object are to be used for 6 axis position and orientation determination and that the choice of color for example, signifies that the object corners are within some predetermined distance from the target. If desired the target location on the object can also point to the corners. For example, in the drawing, the four corners of the diamond, **720-723**, point in the general direction of the four corners **730-733** of the rectangular object **700**.

FIG. **8**

The invention herein and disclosed in portions of other copending applications noted above, comprehends a combination of one or more TV cameras (or other suitable electro-optical sensors) and a computer to provide various position and orientation related functions of use. It also comprehends the combination of these functions with the basic task of generating, storing and/or transmitting a TV image of the scene acquired either in two or three dimensions.

FIG. **8**A illustrates control of functions with the invention, using a handheld device which itself has functions (for example, a cell phone). The purpose is to add functionality to the device, without complicating its base function, and/or alternatively add a method to interact with the device to achieve other purposes.

The basic idea here is that a device which one holds in ones hand for use in its own right, can also be used with the invention herein to perform a control function by determining its position, orientation, pointing direction or other variable with respect to one or more external objects, using an optical sensing apparatus such as a TV camera located externally to sense the handheld device, or with a camera located in the handheld device, to sense datums or other information external for example to the device.

This can have important safety and convenience aspects to it, particularly when the device is used while driving a car or operating other machinery. To date voice recognition has been the only alternative to keying data in to small handheld devices, and voice is limited in many cases very limited if some physical movement is desired of the thing being communicated with.

A cellular phone **800** held in the hand of a user can be used to also signal functions in a car using a projected laser spot from built in laser spot projector **801** as in FIG. **14**, in this case detected by detector **802** on the dashboard **803**. Alternatively and or in conjunction, one may use features such as round dot targets **805-807** on the cell phone which are sensed, for example, by a TV camera **815** located in the car headliner **816** or alternatively for example in the dashboard (in this case the targets would be on the opposite end of the cell phone). More than one set of targets can be used, indeed for most generality, they would be an all sides which point in any direction where a camera could be located to look at them.

Remote control units and dictating units are also everyday examples of some devices of this type which can serve control purposes according to the invention. One of the advantages here is that it keeps the number of switches etc on the device proper to a minimum, while allowing a multitude of added functions, also in noisy environments where voice recognition could be difficult or undesirable for other reasons.

Use of specialized target datums or natural features of devices held in the hand, or used with cameras on such devices, allows photogrammetric techniques such as described in FIG. **1** to be used to determine the location in 6 degrees of freedom of the device with respect to external objects.

As one illustrative example, to signal a fax unit **824** in the car to print data coming through on the phone, the user just points (as illustrated in position **2**) the cell phone toward the fax, and the TV camera **815** scans the images of targets **805-807** on the face toward the camera, and the computer **830** connected to the camera analyzes the target images (including successive images if motion in a direction for example is used as an indicator, rather than pointing angle for example), determines the cell phone position and/or orientation or motion and commands the fax to print if such is signaled by the cell phone position orientation or motion chosen. The knowledge in space of the cell phone location and its pointing direction (and motion as pointed out above) provides information as to the fact that the fax was the intended target of the effort. Such data can be taught to the system, after the fact even if the fax or any other item desired to be controlled is added later.

Another version has a camera and requisite computer (and or transmission capability to an external computer) in the handheld device, such as a cell phone or whatever. When pointed at an object, the camera can acquire the image of the object and/or any natural features or special datums on the object which are needed to perform the function desired.

One function is just to acquire an image for transmission via for example the cell phones own connection. This is illustrated in FIG. **8**B, where an image of object **849** acquired

by camera **850** of cell phone **851** held by user **852** is transmitted over mobile phone link **853** to a remote location and displayed, for example. While this image can be of the user, or someone or something of interest, for example a house, if a real estate agent is making the call, it is also possible to acquire features of an object and use it to determine something.

For example, one purpose is recognition, for example one can point at the object, and let the computer recognize what it is from its TV image. Or point around in space taking multiple TV frames aiming in different directions, and when computer recognition of a desired object in one of the images takes place, transmit certain data to the object. Or it can be used to acquire and transmit to remote locations, only that data from recognized objects.

Thus the invention can provided on a hand held object for a variety of purposes,

To take images of things;

To determine datums on things; and

To automatically read things.

The combination of any or all of these functions in addition with other object functions such as hand held cell phones, dictation units, telephones, wearable computer devices and the like.

An alternative, shown with phantom lines in FIG. **8**A, to the some aspects of the above described operation of the embodiment is to use a laser pointer **801** in for example a cell phone to designate say the fax machine as shown. Then the TV camera **815** simply detects the presence of the laser pointer projected spot **820** on the fax, and via computer memory it is known that this is a device to be energized or connected in connection with the cell phone.

The camera located in a handheld device can also be used to point at a TV screen, such as that on the dashboard of a car, and to utilize data presented there for some purpose. For example, if pointed at a screen saying email message number 5, the camera of the device can be used to obtain this image, recognize it through known character recognition techniques, and process it for transmission if desired. Or it might just say the message to the user of the phone through the speaker of the cell phone. Such a technique is not required if means exist to directly transmit the incoming information to the cell phone, but this may not be possible.

FIG. **9**

FIG. **9** illustrates pointing at a displayed image of an object represented on a screen using a finger or laser pointer, and then manipulating the represented object or a portion thereof using the invention. For example, consider user **901** pointing a laser pointer **905** at an image generated by computer **910** on display **912**, typically a large screen display (e.g., 5 feet diagonal or more) where control features here disclosed are of most value.

The user with the pointer, can point to an image or portion of the displayed image to be controlled, and then using the action of the pointer move the controlling portion of the image, for example a "virtual" slider control **930** projected on the screen whose lever **935** can be moved from left to right, to allow computer **910** sensing the image (for example by virtue of TV camera **940** looking at the screen as disclosed in copending applications) to make the appropriate change, for example in the heat in a room.

Alternatively one can also point at the object using ones fingers and using other aspects of the invention sense the motions of ones fingers with respect to the virtually displayed images on the screen, such as turning of a knob, moving of a slider, throwing a switch etc.

Such controls are not totally physical, as you don't feel the knob, so to speak. But they are not totally virtual either, as you turn it or other wise actuate the control just as if it was physical. For maximum effect, the computer should update the display as you make the move, so that you at least get visual feedback of the knob turning. You could also get an appropriate sound if desired, for example from speaker **950**, like an increase in pitch of the sound as the knob is "moved" clockwise.

FIG. **10**

The above control aspects can in some forms be used in a car as well even with a small display, or in some cases without the display.

Or it can be a real knob which is sensed, for example by determining position of a target on a steering wheel or the fingers turning it tracked (as disclosed in co-pending application references).

For example, consider car steering wheel rim **1000** in FIG. **10**A. In particular, consider hinged targeted switch, **1010** (likely in a cluster of several switches) on or near the top of the wheel, when the car is pointed straight ahead, and actuated by the thumb of the driver **1011**. A camera **1020** located in the headliner **1025**, and read out by microcomputer **1025** senses representative target **1030** on switch **1010**, when the switch is moved to an up position exposing the target to the camera (or one could cover the target with ones fingers, and when you take a finger off, it is exposed, or conversely one can cover the target to actuate the action).

The camera senses that target **1010** is desired to be signaled and accordingly computer **1025** assures this function, such as turning on the radio. As long as the switch stays in the position, the radio is on. However other forms of control can be used where the switch and target snap back to an original position, and the next actuation, turns the radio off. And too, the time the switch is actuated can indicate a function, such as increasing the volume of the radio until one lets off the switch, and the target is sensed to have swung back to its original position and the increase in volume thus terminated.

In operating the invention in this manner, one can see position, velocity, orientation, excursion, or any other attribute of actuation desired. Because of the very low cost involved in incremental additions of functions, all kinds of things not normally sensed can be economically provided. For example the position of a datum **1040** on manually or alternatively automatically movable plastic air outlet **1041** in the dashboard **1042** can be sensed, indicative of the direction of airflow. The computer **1025** can combine this with other data concerning driver or passenger wishes, other outlets, air temperature and the like, to perfect control of the ambiance of the car interior.

It is also noted that the same TV camera used to sense switch positions, wheel position, duct position, seat position (for example using datum **1045**), head rest position (for example using datum **1046**), and a variety of other aspects of physical positions or motions of both the car controls and the driver or passengers. And it can do this without wires or other complicating devices such as rotary encoders which otherwise add to the service complexity and cost.

When the camera is located as shown, it can also see other things of interest on the dashboard and indeed the human driver himself, for example his head **1048**. This latter aspect has significance in that it can be used to determine numerous aspects such as:

1. The identity of the driver. For example, if a certain band of height isn't reached, such as point P on the drivers head, the ignition can be interlocked. Much simpler than face recog-

nition, but effective if properly interlocked to prevent repeated retries in a short time period.

2. The position of the head of the driver in case of an accident. As detailed in reference **4**, a camera or cameras can be used to determine head location, and indeed location of the upper torso if the field of view is large enough. This information can be used to control airbag deployment, or head rest position prior to or during an accident (noting too that headrest position can also be monitored without adding any hardware). Particularly of interest is that the pixel addressing camera of the invention can have the frequency response to be useful in a crash, sensing the movement of the person (particularly severe if unrestrained) within a millisecond or two, and providing a measure of the position for airbag deployment. Additional cameras may also be used to aid the determination, by providing other views or observing other features, for example.

Using a pixel addressing camera for camera **1020** confers additional advantages. For example consider the image of the car interior produced by the camera lens **1021**, on matrix of pixels **1061**, whose addressing and processing is controlled by computer **1025**. In the first instance one can confine the window of view of a certain group of pixels of the total matrix **1061** to be only in the region of the steering wheel, as in window **1065** shown. This allows much faster readout of the more limited number of pixels, and thus of the steering wheel switches, at the expense of not seeing anywhere else in that particular reading. But this may be desirable in some cases, since it may only be required to scan for heater controls or seat positions, every 10 seconds say, while scanning for other more immediate items a hundred times per second or more. A good example are safety related functions. 5 per second might suffice for seeing where the turn signal or windshield washer control was, as an example. Window 1066 dotted lines is illustrative of a window specialized for head, headrest and seat positions, say.

Scans in certain areas of the image can also depend on information obtained. For example one may initiate a scan of a control position, based on the increasing or decreasing frequency of an event occurrence. For example if the persons head is in a different location for a significant number of scans made at 15 second intervals for example, then in case of a crash, this data could be considered unreliable. Thus the camera window corresponding to pixels in the zone of the head location **1048** could be scanned more frequently henceforward, either until the car stopped, or until such action settled down for example. Such action is often the case of a person listening to rock music, for example.

Similarly, if someone is detected operating the heater controls, a scan of predominately heater function controls and related zones like air outlets can be initiated. Thus while normal polling of heater controls might be every 2 seconds say, once action is detected, polling can increase in the window(s) in question to 40 times per second for example. The detection of action can be made first via the camera, or via input from some other input device such as a convention heater knob and electric circuit operable therewith.

Scans in certain areas of the image can also depend on information obtained in other areas of scan, or be initiated by other control actions or by voice. For example, if hard deacceleration was detected by an accelerometer, but before a crash occurred, the camera could immediately be commanded to begin scanning as fast as possible in the region of the image occupied by the driver and/or any other humans in its field of view. This would be for the purpose of monitoring movements in a crash, if a crash came, in order to deploy an airbag for example.

One might utilize the invention to actuate a function, based on positions of people or other objects in the vehicle. As one example, suppose the drivers hand is resting on a console mounted gear lever. By scanning the image of this region, one can determine from the image the position of the console shift lever, and use the image thereof to control gear change via computer **1025**. However if the driver rests his hands on the windshield wiper stalk, it could in the same manner, become a column mounted gear lever so to speak. Or just be used for up down gear changes, like a paddle shifter on a racing car. In fact in the latter sense, the camera could be instructed to detect ones finger or hand movement to do this function for example, wherever one desired to rest ones hand (within the camera field of view at least). This function is also useful for physically disabled persons wishing to drive the car. And it can be different for different persons as well, via programming of the control functions associated with any given hand, switch or other position or movement.

FIG. **10**B illustrates alternative types of control mechanisms which can be used with the invention, in this case illustrated on the steering wheel of a car, although as can be appreciated, any suitable function or location may be used or created. And too, combinations of functions can be used. The invention is generic to car steering wheel controls, dishwashers, audio systems in ones home, heating and air conditioning elements and virtually all other forms of human related control functions. The key is that the camera computer combination makes a very inexpensive way to share a wide variety of functions with one or just a few basic systems and over a large population base.

As shown in FIG. **10**B, the steering wheel **1070** has two additional types of controls visible to camera **1020** and able to be sensed and generate the appropriate control function via computer. These are rotating device **1072** built to rotate around the steering wheel rim circular cross section, and expose a continuously variable, or digital or step wise increment component to the camera. For example, three bars are shown, short **1075**, medium **1076**, and long **1077**. The computer senses which of the three is visible by comparing the length to pre-stored values (or taught values, see below), and causes the desired action to occur.

The second control **1080** is a sliding device **1081** which can be slid clockwise, or counterclockwise along a circumferential section of the steering wheel at the top, sides or wherever. As before, Its position is determined by camera **1020** again providing more data than just a switch up or down as shown before.

While illustrated on the steering wheel where it is readily at hand, it can be appreciated that the position of either the slider **1081** or the rotary device **1072**, or other similar devices for the purpose at hand could be elsewhere than the wheel, for example on stalk or on a piece of the dash, or other interior component indeed wherever a camera of the invention can view them without excessive obscuration by persons or things in the car. It need not be on a car either, controls of this type can be in the home or elsewhere. Indeed a viewable control datum can even be on a portable component such as ones key chain, phone, or article of clothing apparel, or whatever. Similarly the camera **1020** can view these items for other purposes as well.

The teach-ability of the invention is achieved by showing the camera the code marker in question (e.g., a short bar located on the wheel), and in the computer recording this data along with what it is supposed to signify as a control function for example, turn rear wiper on to first setting. This added functionality of being easily changed after manufacture is an

important advantage in some cases, as for example, today after-market addition of wired in accessories is difficult.

Games Using the Invention

The co-pending referenced applications have described games which can be played with target sensing and touch screen based devices, typically but not necessarily, electro-optically based (e.g., TV camera). The cameras of the invention can be used to, for example: Sense the player or players in the game or portions thereof; sense objects held or manipulated by the players (e.g., a ball, a pistol); sense physical tokens used in the game, such as monopoly game tokens; and sense game accessories such as checkerboards, croquet wickets; compare positions of objects with respect to other objects or players.

In addition, the cameras can be used to take images which can be displayed also a major feature given the ability to create life size displays. And the computer of the invention can be used to control the presentation of background image data from stored images, or even images downloaded from the internet for example.

Some or all of these aspects will now be illustrated in some representative game illustrations (again noting that some more are in the co-pending applications).

FIG. **11** Board Game

Even today, popular board games such as Monopoly and the like are being provided in computer playable form, with the "board" represented on the screen of the computer monitor. The invention here builds on this by providing various added features which allow a physical nature of the game just as the real game, but with new aspects and providing physical game play which can be transmitted over the internet to others. These features also can be turned off or on at as desired.

In one version shown in FIG. **11**A, the player tokens such as **1101** and **1102** are observed by camera of the invention **1110** placed directly overhead of the play board **1115**, which can for example be a traditional monopoly board (chess board, checker board, etc). points on the board such as corners **1130**, **1131**, **1132**, and **1133** can also be observed to establish a reference coordinate system for the computer **1140** to track the moves of the markers, either from their natural features, or from specialized datums thereon (e.g., retro-reflective hat top **1141** on marker **1101**). For example a train shape **1102** of a marker can be called from memory, or taught to the computer by showing it to the camera. Rotation invariant image analysis programs such as the PATMAX program from Cognex company can be used to identify the marker in any normal orientation, together with its location on the board (the board itself can be taught to the computer using the camera, but is preferably called up from memory).

The board position and relative scale in the field of view is determined easily by knowing the spacing of the corner points **1130-1133** and using this to calibrate the camera (to provide extra contrast, the corners can have retro-reflective glass bead edging or beading as shown). For example if the points are spaced 20 inch on corners of the board, and the camera is positioned so that 20 inches occupies 80% of its field of view, then the field of view is 25 inches square (for a square matrix of camera pixels), and each pixel of 1000 pixels square, occupies 0.025 inches in the object field.

The play of both players (and others as desired) can be displayed on the monitor **1150**, along with an image of the board (which also can be called from computer memory). But other displays can be provided as well. For example to lend more realism to the game, the display (and if desired sound from speaker **1155** connected to computer **1140**) can also be programmed to show an image or sound that corresponds to the game. For example, when the camera image has provided information that one player has landed on "Boardwalk" (the most valuable property) a big building could be caused to be shown on the screen, corresponding to it also suitable sounds like wow or something provided).

The camera can be used to see monopoly money (or other game accessories) as well, and to provide input so the computer can count it or do whatever.

A large, wall sized for example, screen can add added realism, by allowing one to actually get the feeling of being inside the property purchased, for example.

One of the exciting aspects of this game is that it can be used to turn an existing board game into something different. For example, in the original monopoly the streets are named after those in Atlantic City. By using the computer, and say a DVD disc such as **1160** stored images of any city desired can be displayed, together with sounds. For example, one could land on the Gritti Palace Hotel in Venice, instead of Boardwalk. As shown in FIG. **11**B, the TV camera senses the image of train marker **1101**, and conveys this information to computer **1140**, which causes the display **1150** and speaker of the invention to display the information desired by the program in use.

Making the game in software in this way, allows one to bring it home to any city desired. This is true of a pure (virtual) computer game as well, where the board only exists on the computer screen.

For added fun, for example in a small town context, local stores and properties could be used, together with local images, local personages appearing on the screen hawking them, and the like. A local bank could be displayed to take your money, (even with sounds of the local banker, or their jingle from the radio) etc. This makes the game much more local and interesting for many people. Given the ease of creating such local imagery and sounds with cameras such as digital camcorder **1151** used as an input of display imagery (e.g., from local celebrity **1158**) to the game program, one can make any monopoly experience more interesting and fun at low cost.

The same holds true with other well known games, such as Clue, where local homes could be the mystery solving location, for example. One can also create games to order, by laying out ones own board. If one of the persons is remote, their move can be displayed on the screen **1150**.

In the above, the display has been treated as sort of backdrop or illustration related. However, one can also create a whole new class of games in which the display and/or computer and the board are intertwined. For example as one takes a trip around the monopoly board, several chance related drawings opportunities occur during play. In this new game, such could be internet addresses one draws, which, via modem **1152**, send the board game computer **1140** to any of a large number of potential internet sites where new experiences await, and are displayed in sight and sound on the display.

It should also be noted that the board can be displayed on the screen as well, or alternatively projected on a wall or table (from overhead). A particularly neat mixture of new and old is shown in FIG. **11**B, where the board is displayed on a screen pointed vertically upward just as it would be on a table, and indeed in this case physically resident on a table **1165**. The board is displayed (from software images or cad models of the board in computer **1166**) on a high resolution table top HDTV LCD screen **1167** with a suitable protective plastic shield (not shown for clarity). Play can proceed just as before using physical tokens such as **1101** and **1102**. In this case the

display used to augment the game can actually be shown on the same screen as the board, if desired.

The TV camera **1110** in this context is used to see the tokens and any other objects of the game, the people as desired, and the play, as desired. The camera can be used to see the display screen, but the data concerning the board configuration displayed may be best imputed to the computer program from direct data used to create the display.

A beauty of the invention is that it allows the interaction of both computer generated images and simulations, with the play using normal objects, such as one might be accustomed to for example, or which give a "real" feel, or experience to the game.

FIG. **12** Sports Game

FIG. **12** illustrates a generic physical game of the invention using points such as **1201-1205** on the human (or humans) **1210** sensed by a TV camera such as stereo camera pair **1215** and transmitted to the computer of the invention **1220**. While points can be sensed in 2D, this illustration uses as stereo camera pair located on large screen display **1225** as shown to provide a unitary package built into the screen display (pointed out in other co-pending applications). In this particular instance a 3D display is illustrated, though this isn't necessary to obtain value and a good gaming experience. The human optionally wears red and green filter glasses **1235** such that red images on the screen are transmitted to one eye, green to another, so as to provide a 3D effect. Similarly crossed polarized filter glasses (with appropriate display), and any other sort of stereoscopic, or autosteroscopic method can also be used, but the one illustrated is simple, requires no connecting wires to the human, and can be viewed by multiple uses, say in a gym aerobics room.

The game is generic, in that it totally depends on the program of the computer. For example, it can be an exercise game, in which one walks on a treadmill **1250**, but the image displayed on screen **1225** and sound from speakers **1255** and **1266** carry one through a Bavarian forest or the streets of New York as one walks, for example.

Or it can be a parasail game in which one flies over the water near Wakiki beach, with suitable images and sounds. In any case action determined by sensing position, velocity acceleration, or orientation of points **1201-1206** on the player, **1210** is converted by computer **1220** into commands for the display and sound system. Note in the figure this player is shown viewing the same screen as the treadmill walker. This has been shown for illustration purposes, and it is unlikely the same game could be applied to both, but it is possible.

It is noted that fast sensing, such as provided by the pixel addressing camera method disclosed above is highly desirable to allow realistic responses to be generated. This is especially true where velocities or accelerations need to be calculated from the point position data present in the image (and in comparison to previous images).

For example, consider points **1201** and **1202** on player **1210**. If point **1201** moves to **1201***a*, and **1202** moves to **1202***a* indicative of a quick jerk movement to turn the displayed parasail, this movement could occur in a 0.1 second. But the individual point movements to trace the action would have to be sensed in 0.01 second or quicker for example to even approximately determine the acceleration and thus force exerted on the glider, to cause it to move.

It is important to note that the invention is not only generic in so far as the variety of these games are concerned, but it also achieves the above with virtually no mechanical devices requiring maintenance and creating reliability problems which can eliminate profits from arcade type businesses especially with ever more sophistication required of the games themselves.

FIG. **13** Bar Game

FIG. **13** illustrates a game which is in a class of gesture based games, in which the flirting game of FIG. **15** is also an example. In such games one senses the position, velocity or acceleration of a part of a person, or an object associated with the person. This can also include a sequence of positions, itself constituting the gesture. The detected data is then related to some goal of the contest. Consider FIG. **13**, wherein the object in ones hand is monitored using the invention, and a score or other result is determined based on the position, velocity, orientation or other variable of the object determined. For example, in a bar one can monitor the position, orientation, and rate of change thereof of drinking glasses.

A two person game is illustrated, but any reasonable number can play as long as the targets can all be tracked sufficiently for the game (in one test over 200 targets were acquired, but as can be appreciated this uses most of the field of view of the camera, and thus speed improvements made possible by pixel addressing become more difficult.

As shown, a single camera **1301** observes one or more targets such as **1305** on glass **1310** held by contestant **1315**, and target **1320** on glass **1325** of contestant **1330**. On a signal, each drinks, and a score is calculated by program resident in computer **1350** based on the time taken to raise the glass, and place it back empty on table **1355**. A display of the score, and an image desired, for example of the winner (taken with camera **1301** or another camera), or a funny image called from computer memory, is displayed on monitor display **1370**.

If the glass features are sufficiently distinct for reliable and rapid acquisition and tracking, for example as might be provided by an orange color, or a distinct shape, then specialized target features are not required.

Alternatively the velocity, path of movement of the glass (or other object), acceleration, or any other variable from which target data is sufficient to calculate, can be used to determine a score or other information to be presented or used.

FIG. **14**

The referenced co-pending applications have described a game where by laser pointers can be used to designate images on a TV screen. In this case of FIG. **14**A, the TV camera of the invention such as **1410** is used in a two player game to see laser pointer spots such as **1420** and **1421** projected by players **1430** and **1431** respectively, using laser pointers **1440** and **1441** respectively. When one player's spot hits the other, the event is recorded in memory of computer **1450** for further analysis and display.

In a somewhat different context, a person can use a laser pointer to point at an object to designate it for some purpose, for example for action. For example consider FIG. **14**B, in which housewife **1460** who points with laser pointer **1462** so as to provide a laser spot **1465** on dishwasher **1470**. TV camera of the invention **1475** in corner of the kitchen **1480** picks up all laser spots in an image of the room (made easier to process in terms of signal to background imagery if one locates a laser wavelength band-pass interference filter **1481** in front of the TV camera as shown) and compares via computer **1483**, the location of the spot detected in the image to stored memory locations of objects such as the dishwasher **1470** or fridge **1485** in the camera field of view, so as to identify the object needing action. In this case too, housewife may signal via a spatially variant laser pointer projection image (see copending referenced applications for further

examples in other applications), or a series of spots in time, what action is desired, for example to turn the washer on. In this case the computer **1483** can cause a command to do so to be sent to the washer.

Any one with a simple laser pointer can make these commands effective. No learning is needed just point at the item desired, with the TV camera and computer of the invention acquiring the data and interpreting it. This is much simpler than remote controls of today, and a major advantage for those who have difficulty or inclination to learn complex electronic devices and procedures. It should be noted that these pointing procedures can easily be combined with voice recognition to further define the desired control activity for example inputting the housewife's voice in this example by virtue of microphone **1476**.

The stored locations can be taught. For example in a setup mode, one can point a laser pointer at the dishwasher, and indicate to the computer that that spot is the dishwasher. The indication can be provided by keyboard, voice recognition or any other means that is satisfactory.

Clearly other items can be monitored or controlled in this manner. The camera can also detect optical indications provided by other means, for example lights in the appliance itself. And one can detect whether light have been left on at night (or not left on) and cause them to be turned off or on as desired.

Such a camera if it is responsive to normal illumination as well as that of the laser wavelength, can also be used to see movements and locations of people. For example, it can look at the top of the stove, and assure that no movement is near the stove **1486**, or objects on it if programmed to do so, thus sounding an alarm if an infant should get near the stove, for example.

The housewife in the kitchen can also point at a board on which preprogrammed actions are represented. For example consider board **1490**, shown in greater detail in FIG. **14**C, in which 3 squares **1491-1493** are to represent different functions. Thus if **1491** is programmed (via keyboard, voice or whatever) to represent turning on the clothes dryer in the laundry, when the TV camera sees, and via the computer, identifies spot **1496** projected by the user on square **1491**, it causes the dryer to turn on. Operated in this manner, the board **1490**, in combination with a TV camera of the invention (such as **1475** or a more dedicated one for the board alone) and computer such as **1483** can be considered a form of touch screen, where the user, in this case in the kitchen can point at a portion of the board with a finger, or a laser pointer, and register a choice, much like touching an icon on a conventional computer touch screen.

Similarly, squares or other zones representing choices or the like can be on the item itself. For example, a stove can have four areas on its front, which can be pointed at individually for control purposes, what ever they are (e.g., representing heat settings, burner locations or the like). For security, it could be that only a coded sequence of laser pulses would be seen, or as pointed out in co-pending reference Ser. No. 60/133,673, a spatial code, for example representing the user such as an initial could be projected, and sensed on the object by the TV camera.

The laser pointer can be held in the hand of the user, or, like **1497** attached for example to a finger, such as forefinger **1498**. Or it can be on or in another object, desirably one which is often hand held in the normal course of work, such as a TV remote control, a large spoon, or the like. Or using other aspects of the invention, the finger of the user can be observed to point directly, and the object being pointed at determined. For example if finger **1498** is moved 4 times, it could indicate to the TV camera and thence computer that channel four was desired on a TV display not shown.

If a special pointer is used, it can be any workable optical device, not necessarily a laser. The camera and computer of the invention can also be used to observe the user pointing directly, and compute the pointing vector, as has been described in my co-pending applications.

FIG. **15** A "Flirting" Game

Another game type is where the camera looks at the human, and the humans expressions are used in the game. In this case it is facial expressions, hand or body gestures that are the thing most used.

For example, one idea is to have a scene in a restaurant displayed on a display screen **1500**, preferably a large HDTV screen or wall projection to be as lifelike as possible, and preferably life size as well which lends extra realism to some games, such as this one due to the human element involved.

Let us consider that seated at the table in the restaurant displayed on the screen is a handsome man **1501** whose picture (likely a 3D rendered animation, or alternatively photo-imagery called from memory), and the goal for the girl **1510** playing the game is to flirt with this man until he gets up and comes over to say hello, ask her out or what ever (what he does, could be a function of the score obtained, even!).

Player **1510** seated at table **1511** (for authenticity, for example) is observed by TV camera **1515** (or stereo pair as desired, depending whether 3D information is thought required) and computer of the invention **1520**, which through software determines the position of eyebrows, lips, hands, fingers and any other features needed for the game. If necessary, specialized targets can be used as disclosed herein and elsewhere to augment this discrimination, for example such as optically contrasting nail polish, lipstick, eyeliner or other. Contrast can be in a color sense, or in a reflectivity sense such as even retro-reflective materials such as Scotchlite 7615 by 3M company. Even special targets can be used to enhance expressions if desired.

This can be a fun type game, as the response of the displayed person can be all kinds of things even contrary to the actual gestures if desired. Sounds, such as from speaker **1530** can also be added. And voice recognition of players words sensed by microphone **1550** can also be used, if verbal as well as expressive flirting is used.

While the game here has been illustrated in a popular flirting context, it is more generally described as a gesture based game. It can also be done with another contestant acting as the other player. And For example, the contestants can be spaced by the communication medium of the internet. The displayed characters on the screen (of the other player) can be real, or representations whose expressions and movements change due to sensed data from the player, transmitted in vector or other form to minimize communication bandwidth if desired.

Other games of interest might be:

"Down on the Farm" in which a farmer with live animals is displayed on a life size screen, and the children playing the game are to help the farmer by calling the animals to come over to them. This would use recognition of voice and gesture to make the animal images move and make sounds.

A player can find someone in a display and point at him, like the "Whereas Waldo" puzzle game. Then the subject moves, child runs to peek at him, and to find him, say running down a street whose image is displayed on the screen.

One can also use the camera of the invention to monitor the progress made by a child building blocks, and show an Video

displayed image of a real skyscraper progressing as he builds his little version. Note the benefit of group activity like a board game and children's play with each other.

FIG. **16**

FIG. **16** illustrates a version of the pixel addressing camera technique wherein two lines on either side of a 1000 element square array are designated as perimeter fence lines to initiate tracking or other action.

Some "pixel addressing" cameras such as the IVP MAPP 2500 512×512 element camera, are smart, that is can process on the same chip. However, in some cases the control of such a camera may not allow one to actually read just one pixel, say, but rather one must read the whole line on which the pixel rests. Now some processing can be in parallel such that no speed is lost, at least in many instances.

If however, one does have to read a whole line serially into a computer portion, then to fully see a 10×10 pixel round target say, one would have to read at least 10 lines.

If two targets both were located on the same lines, the time involved to read would be the same.

In the same vein, if lines of data must be scanned, then the approach of **2***b* wherein every 20th pixel say is interrogated can be specialized to having such pixels fall on scan lines wherever possible. And where one is restricted to reading all pixels on a scan line and where a target entry zone is anticipated, one can have a scan line oriented to be crossed by such entry. For example in FIG. **16**, the two lines **1601** (line of pixels **3**) and **1602** (line of pixels **997**) of a 1000×1000 element pixel array **1610** are designated as perimeter fence lines, to trigger a target tracking or other function on the entry of a target image on to the array, such as **1615** from either the right or left side in the drawing. This is often the case where entry from top or bottom is precluded by constraints of the application, such as a table top at the bottom, or the height of a person at the top. Or in a stereo example such as FIG. **6**, the baseline defines the direction of excursion of a target as z is varied again calling for crossing of scan lines out of the plane of the paper at some point.

The invention herein has provided an exciting method by which common board games can become more fun. The invention provides a link with that past, as well as all of the benefits of the video and computer revolution, also via the internet.

It is envisioned that the same approach may be applied to many card games as well. It is also thought that the invention will find use in creating ones own games, or in downloading from the internet others creations. For example, common everyday objects can become the tokens of the games, and taught to the game computer by presenting them to the video camera. Similarly, the people playing the game can be taught, including their names and interests.

FIG. **17**

FIG. **17** illustrates a 3D acoustic imaging embodiment of the invention which at low cost may generate accurate 3D images of the insides of objects, when used in conjunction with ultrasonic transducers and particularly a matrix array of ultrasonic transducers.

As shown in FIG. **17**A, the position in xyz of the ultrasonic imaging head **1700** on wand **1701** held in a users hand **1702** is monitored electro-optically as taught in FIG. **1**, using a single camera **1710** and a simple four dot target set **1715** on the head **1700** at the end of the transducer wand **1701** in contact with the object to be examined **1720**. Alternatively, as also taught in FIG. **1**, a stereo pair for example providing higher resolution in angle can be employed.

Computer **1725** combines ultrasonic ranging data from the ultrasound transducer head **1700** and from the sensor of transducer location (in this case performed optically by camera **1710** using the optically visible targets on the transducer head) in order to create a range image of the internal body of the object **1720** which is thus referenced accurately in space to the external coordinate system in the is case represented by the camera co-ordinates xy in the plane of the TV camera scan, and z in the optical axis of the camera.

In many cases it is also desirable to know the pointing angles of the transducer. One instance is where it is not possible to see the transducer itself due to obscuration, in which case the target may alternately be located at the end **1704** of the wand for example. Here the position and orientation of the wand is determined from the target data, and the known length of the wand to the tip is used, with the determined pointing angle in pitch and yaw (obtained from the foreshortening of the target spacings in the camera image field) to calculate the tip position in space.

This pitch and yaw determination also has another use however, and that is to determine any adjustments that need to be made in the ultrasonic transduction parameters or to the data obtained, realizing that the direction of ultrasound propagation from the transducer is also in the pointing direction. And that the variation in ultrasound response may be very dependent on the relation of this direction **1730** with respect to the normal **1735** of the surface **1736** of the object (the normal vector is shown for clarity pointing inward to the object).

The difference in direction can be calculated by using the TV camera (which could be a stereo pair for greater angular resolution) as well to determine the surface normal direction. This can, for example, be done by placing a target set such as **1740** on the surface in the field of the camera as shown. This can be dynamically or statically accomplished using the photogrammetric method described in the Pinkney references.

Differences in direction between the surface normal and the transducer pointing direction are then utilized by software in the computer **1725** of the invention in analysis of the ultrasound signals detected. The pointing angle and the position of the transducer on the surface of the object are used by the computer in predicting the location of various returns from internal points within the object, using a suitable coordinate transformation to relate them to the external coordinate reference of the TV camera.

All data, including transducer signals and wand location is fed to computer **1725** which then allows the 3D image of the inside of the body to be determined as the wand is moved around, by a human, or by a robot. This is really neat as all the images sequentially obtained in this manner can be combined in the computer to give an accurate 3D picture **1745** displayed on monitor **1750**.

In one preferred embodiment as shown in FIG. **17**C, the transducer head **1700** is comprised of a matrix **1755** of 72 individual transducer elements which send and receive ultrasound data at for example, 5 MHZ. This allows an expanded scan capability, since the sensor can be held steady at each discrete location xyz on the object surface, and a 3D image obtained with out movement of the transducer head, by analyzing the outputs of each of the transducers. Some earlier examples are described in articles such as: Richard E. Davidsen, 1996 IEEE Ultrasonics Symposium, A Multiplexed Two-Dimensional Array For Real Time Volumetric and B-Mode; Stephen W. Smith, 1995 IEEE Ultrasonics Symposium, Update On 2-D Array Transducers For Medical Ultrasound, 1995.

If the wand is now moved in space, fine scan resolution is obtained, due to the operation of the individual elements so positioned with out the need to move the wand in a fine pitch

manner to all points needed for spatial resolution of this order. This eases the operators task, if manually performed, and makes robotization of such examination much easier from a control point of view.

Consider FIG. **17**B which illustrates a transducer as just described, also with automatic compensation at each point for pointing angle, robotically positioned by robot, **1785** with respect to object **1764**. In this case a projection technique such as described in U.S. Pat. No. 5,854,491 is used to optically determine the attitude of the object surface, and the surface normal direction **1760** from the position of target set **1765** projected on the surface by diode laser set **1770**, and observed by TV Camera **1775** located typically near the working end of the robot. Differences between the normal direction and the transducer propagation direction (typically parallel to the housing of the transducer) is then used by computer **1777** to correct the data of the ultrasonic sensor **1780** whose pointing direction in space is known through the joint angle encoders and associated control system **1782** of robot **1785** holding the sensor. Alternatively the pointing direction of this sensor can be monitored by an external camera such as **1710** of FIG. **17**A.

It should be noted that the data obtained by TV camera **1775** concerning the normal to the surface and the surface range from the robot/ultrasonic sensor, can be used advantageously by the control system **1782** to position the robot and sensor with respect to the surface, in order to provide a fully automatic inspection of object **1764**. Indeed the camera sensor operating in triangulation can be used to establish the coordinates of the exterior surface of object **1764** as taught for example in U.S. Pat. No. 5,854,491, while at the same time, the acoustic sensor can determine the range to interior points which can be differentiated by their return signal time or other means. In this manner, a complete 3D map of the total object, interior and exterior, can be obtained relative to the coordinate system of the Robot, which can then be transformed to any coordinate system desired.

The invention has a myriad of applications beyond those specifically described herein. The games possible with the invention in particular are limited only by the imagination.

What is claimed is:

1. A method for controlling a handheld computing device comprising the steps of:

holding said device in one hand;

moving at least one finger in space in order to signal a command to said device;

electro-optically sensing light reflected from said at least one finger using a sensing means associated with said device;

determining from said sensed light the movement of said finger, and

using said sensed finger movement information, controlling said device in accordance with said command.

2. A method according to claim **1**, wherein at least one camera is utilized to effect said electro-optical sensing.

3. A method according to claim **1**, including the further step of acquiring an image of at least a portion of the user of the device.

4. A method according to claim **1**, wherein said movement is sensed in 3 dimensions.

5. A method according to claim **1**, wherein movement of one finger relative to another finger is sensed.

6. A method according to claim **1**, wherein movement of two fingers is sensed.

7. Handheld computer apparatus comprising:

a housing;

a camera means associated with said housing for obtaining an image using reflected light of at least one object positioned by a user operating said object;

computer means within said housing for analyzing said image to determine information concerning a position or movement of said object; and

means for controlling a function of said apparatus using said information.

8. Apparatus according to claim **7**, wherein said object is a finger.

9. Apparatus according to claim **7**, further including a display function which is controlled.

10. Apparatus according to claim **9**, wherein said display is 3D display.

11. Apparatus according to claim **7**, further including means for transmitting information.

12. Apparatus according to claim **7**, further including a light source for illuminating said object.

13. Apparatus according to claim **7**, wherein said apparatus is a cellular phone.

14. A method for controlling a handheld computing device comprising the steps of:

providing a computer within said device;

associating a camera with said device, said camera viewing at least a portion of the body of a user operating said device or an object held by said user, in order provide image data concerning said portion or object;

using said computer, analyzing said image data to determine information concerning a user input command; and

from said determined information, controlling a function of said device.

15. A method according to claim **14**, wherein reflected light from said body portion or object is imaged by said camera.

16. A method according to claim **14**, wherein said information includes the position of the portion or object.

17. A method according to claim **14**, wherein said information includes the change in position of the portion or object.

18. A method according to claim **14**, wherein said information includes the velocity or path of the portion or object.

19. A method according to claim **14**, wherein said information is obtained in 3 dimensions.

20. A method according to claim **14**, wherein said information includes the pointing direction of the portion or object.

21. A method according to claim **14**, wherein a display is controlled.

22. A method according to claim **21**, wherein a virtual image on said display is moved or changed.

23. A method according to claim **21**, wherein said display is a 3D display.

24. A method according to claim **23**, wherein said display is a stereoscopic display.

25. A method according to claim **14**, including the further step of transmitting data to a further device.

26. A method according to claim **14**, wherein said camera operates at 30 frames per second or greater.

27. A method according to claim **14**, wherein said controlled function relates to a game.

28. A method according to claim **14**, including the further step of acquiring a picture of the user of the handheld device.

29. A method according to claim **14**, wherein two fingers of the user are sensed and a pinching action determined.

30. A method according to claim **14**, wherein said body portion indicates an expression of said user.

31. A method according to claim **14**, wherein said information provides an aid to speech recognition.

* * * * *